5 **(a)** Define *magnetic flux*.

.....

..... [1]

(b) Fig. 5.1 shows a 1.6 m long solenoid with 400 turns and a cross-sectional diameter of 4.0 cm. A coil Y, with 80 turns, is wounded tightly around the centre region of the solenoid.

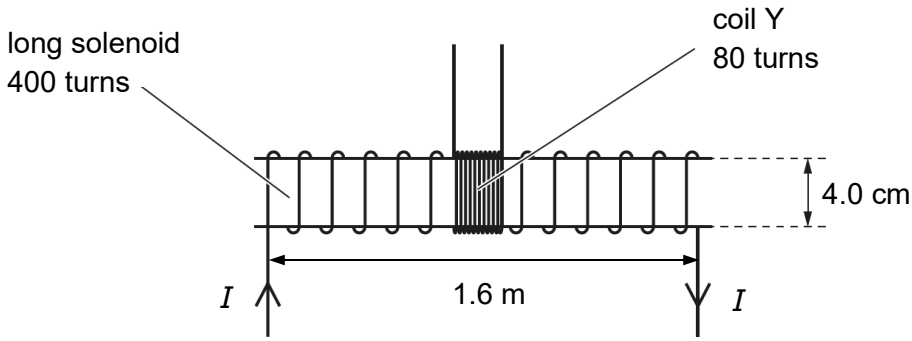

Fig. 5.1

(i) Show that, for a current I of 3.8 A in the solenoid, the magnetic flux linkage of coil Y is 1.2×10^{-4} Wb.

[2]

(ii) The current I in the solenoid in **(b)(i)** is reversed in 0.30 s.

Calculate the mean e.m.f. induced in coil Y.

mean e.m.f. = ... V [2]

(iii) The current I in the solenoid in **(b)(ii)** varies with time t as shown in Fig. 5.2.

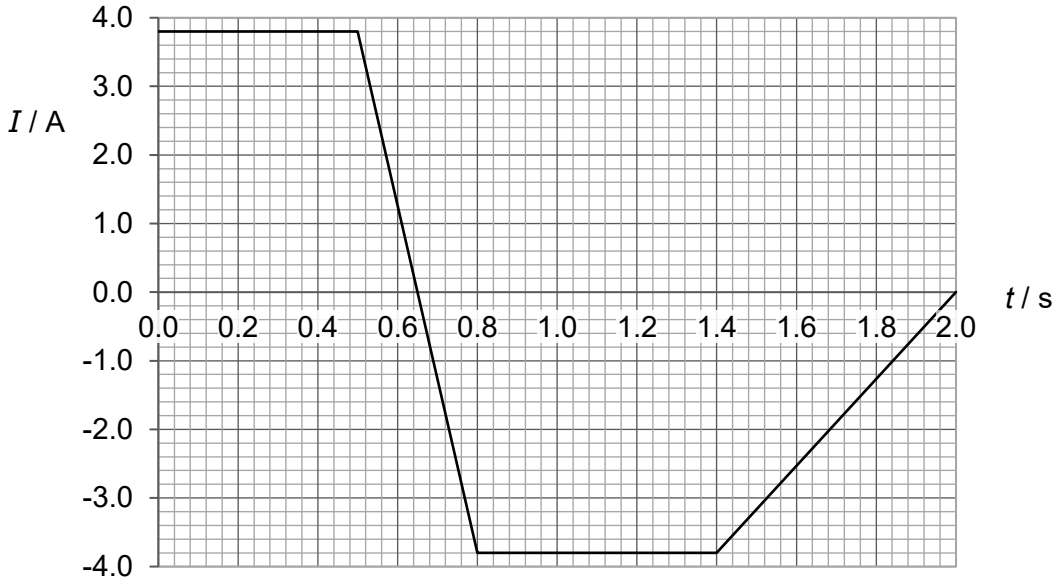

Fig. 5.2

Use your answer to **(b)(ii)** to sketch, on Fig. 5.3, the variation with time t of the e.m.f. E induced in coil Y.

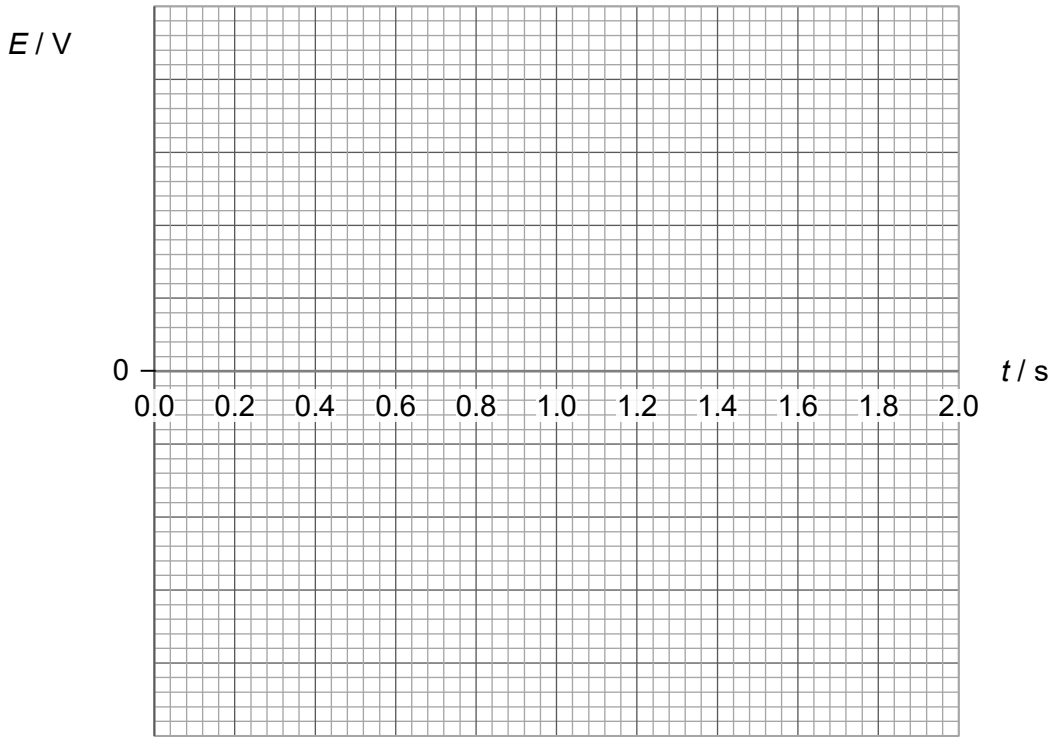

[3]

(iv) An iron core is inserted into the solenoid and then held stationary within the solenoid. Explain the effect on the e.m.f. induced in coil Y.

.....

.....

..... [2]