7 **(a)** A power bank (which is basically a battery) can be used to power many devices at the same time. A power bank of e.m.f. 12.0 V and internal resistance 3.0 Ω is connected to multiple devices in the circuit shown in Fig. 7.1.

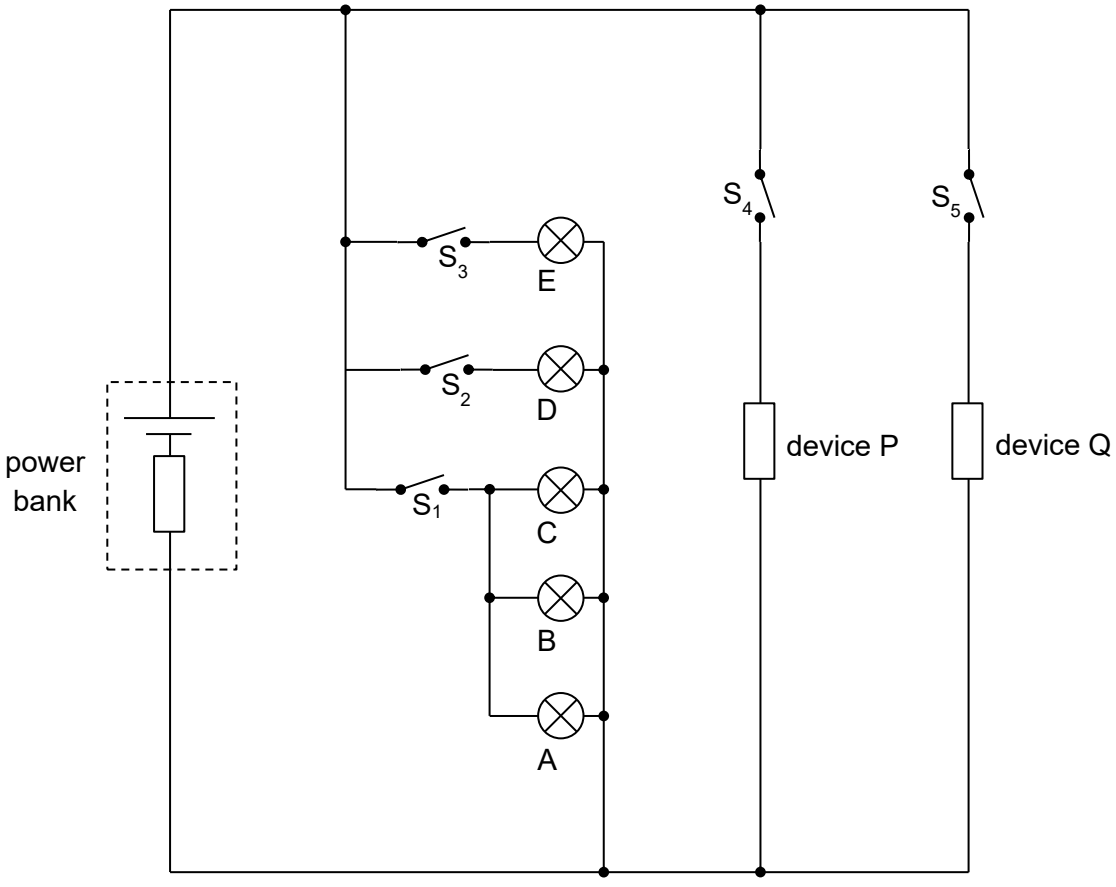

Fig. 7.1

The power bank is connected to 5 identical lamps (A, B, C, D and E) and 2 devices (P and Q). The lamps and devices can be turned on and off using the various switches (S_1, S_2, S_3, S_4 and S_5).

(i) Explain what is meant by "*e.m.f. of 12.0 V*" with reference to the power bank.

.....

..... [2]

(ii) State the effect of closing switch S_1.

.....

..... [1]

(iii) All the switches are now closed. Given the data below, calculate the current supplied by the power bank.

Resistance of each lamp = 25.0 Ω

Resistance of device P = 38.0 Ω

Resistance of device Q = 42.0 Ω

current = ... A [2]

(iv) Calculate the terminal potential difference of the power bank when all the switches are closed.

terminal potential difference = ... V [2]

(v) State and explain the effect, if any, on the brightness of the lamps if switches S_4 and S_5 are now opened while the rest remain closed.

.....

.....

.....

..... [2]

(b) The same power bank from **(a)** is now connected in a potentiometer circuit as shown in Fig. 7.2.

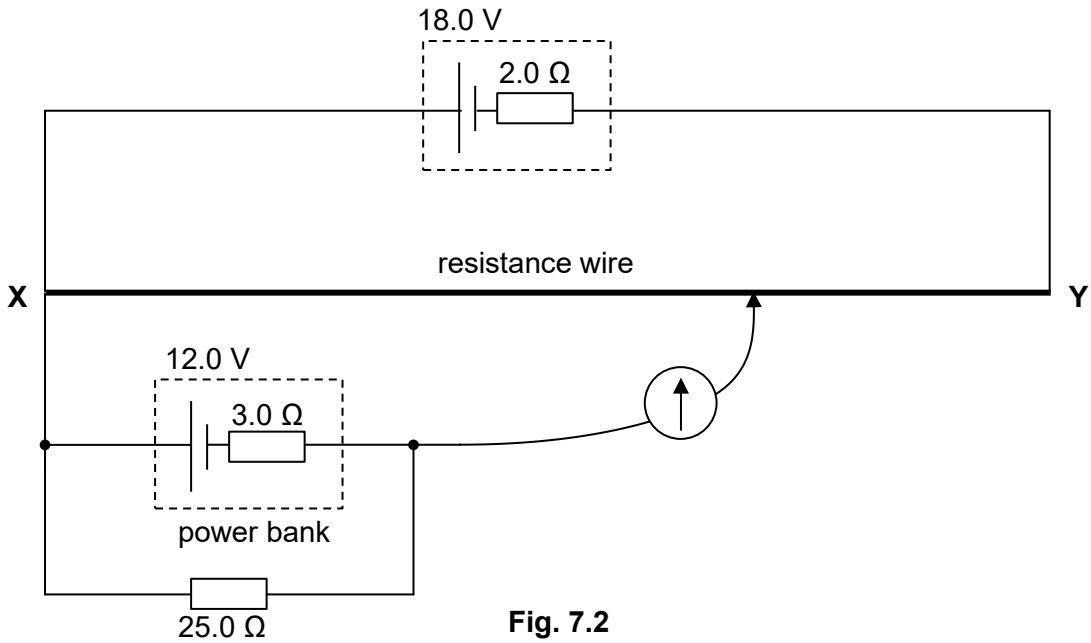

Fig. 7.2

A 18.0 V battery with internal resistance of 2.0 Ω is connected to a resistance wire XY. XY is 1.00 m long and has resistance of 7.2 Ω. A resistor of 25.0 Ω is connected in parallel to the power bank.

(i) Calculate the balance length when the galvanometer shows a reading of zero.

balance length = ... m [3]

(ii) Explain why it is desirable to obtain a balance point which is closer to end Y.

.....

..... [1]

(iii) State and explain the effect, if any, on the balance length if resistance wire XY is now made of a material with higher resistivity.

.....

..... [2]