19 A computer is used to detect the change of position of a switch. To detect the change of position, the computer requires a potential difference (p.d.) of 0 V to its input at one switch position and a p.d. between 5 V and 7 V for the other switch position.
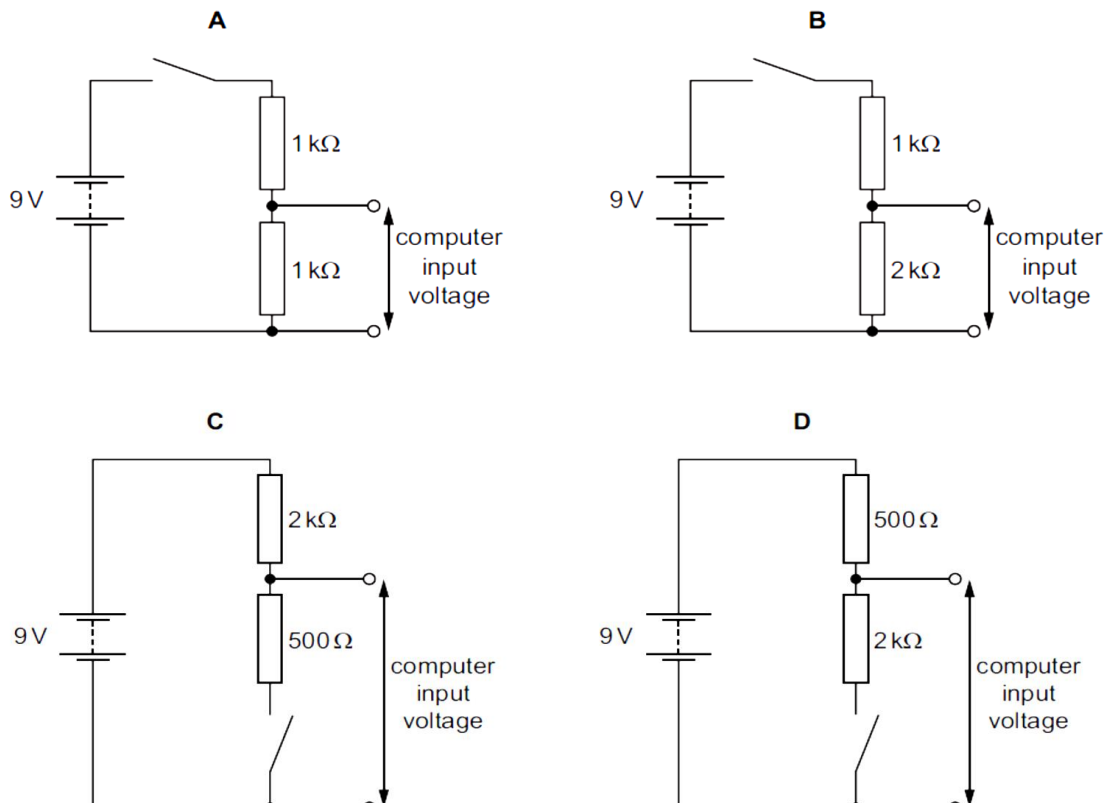
Which of the following circuits provides an input voltage to the computer that enables it to detect the change of position of the switch? (The battery and computer in each circuit has negligible internal resistance and infinite resistance respectively.)