20 The diagram shows a circuit with four resistors with resistance *P*, *Q*, *R* and *S* connected to a battery.

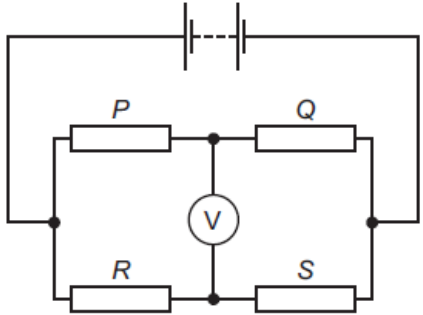

The voltmeter reading is zero. Which of the following equations is correct?

A $P - Q = R - S$
B $P - S = Q - R$
C $PQ = RS$
D $PS = QR$