3 **(a)** Fig. 3.1 shows a circuit containing three identical lamps A, B and C. It also contains three switches, S_1, S_2 and S_3.

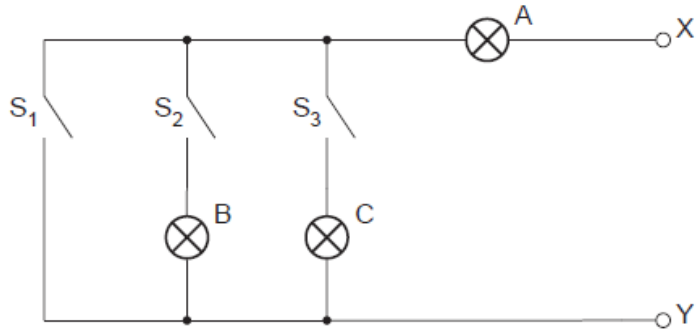

Fig. 3.1

One of the lamps is faulty. In order to detect the fault, an ohm-meter is connected between terminal X and Y. When measuring resistance with the ohm-meter, negligible current flows in the circuit.

Fig. 3.2 shows the readings of the ohm-meter for different switch positions.

switch			meter reading
S_1	S_2	S_3	/ Ω
open	open	open	∞
closed	open	open	15 Ω
open	closed	open	30 Ω
open	closed	closed	15 Ω

Fig. 3.2

(i) Identify the faulty lamp, and the nature of the fault.

Faulty lamp: .....

Nature of fault: .....[2]

(ii) Suggest why it is advisable to test the circuit using an ohm-meter rather than with a power supply.

.....

.....[1]

(a) **(iii)** Determine the resistance of the lamp when it is functioning properly.

resistance = ...Ω [1]

(b) A battery of e.m.f. 4.50 V and negligible internal resistance is connected to a fixed resistor of resistance 1200 Ω and a thermistor, as shown in Fig. 3.3.

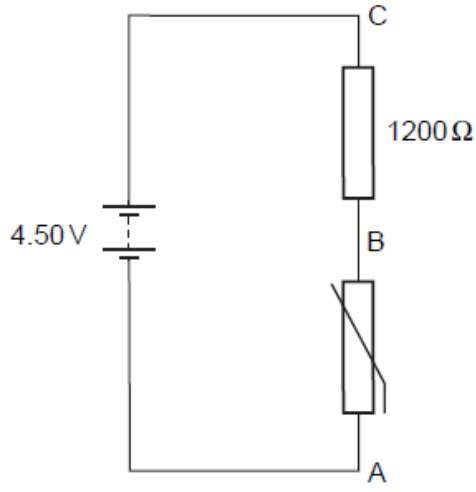

Fig. 3.3

At room temperature, the thermistor has a resistance of 1800 Ω.

A uniform resistance wire PQ of length 1.00 m is now connected to the resistor and the thermistor, as shown in Fig. 3.4.

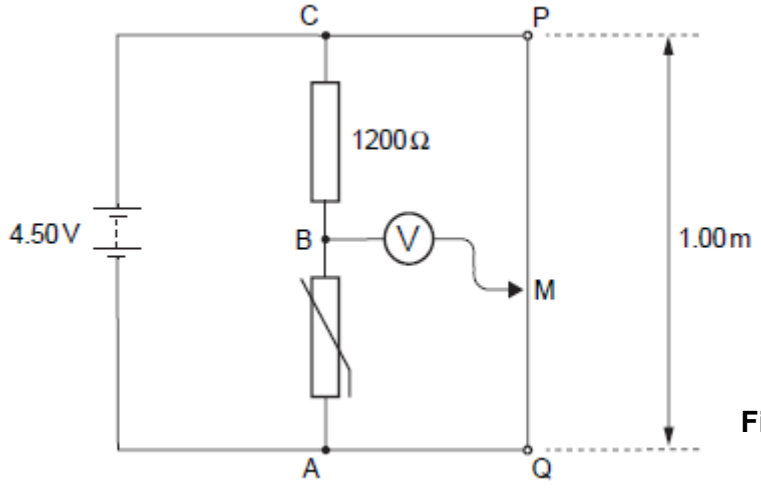

Fig. 3.4

A voltmeter is connected between point B and a movable contact M on the wire.

(i) Explain why, for constant current in the wire, the potential difference between any two points on the wire is proportional to the distance between the points.

.....

.....

.....

.....[2]

(b) **(ii)** The contact M is moved along PQ until the voltmeter shows zero reading. Calculate the length of the wire between M and Q.

length = ……m [2]

(iii) The temperature of the thermistor increases slightly during the measurement. Explain the effect on the length of wire between M and Q for the voltmeter to show zero reading.

……

……

……

……[2]