For Examiner's Use

6 Fig. 6.1 shows a circuit consisting of two resistors connected in series to a d.c. supply.

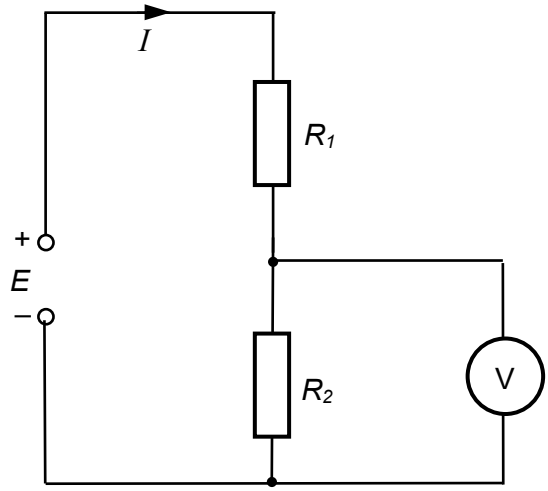

Fig. 6.1

The resistors have resistances R_1 and R_2. The supply has e.m.f. E and negligible internal resistance. The current from the supply is I. The voltmeter has an infinite resistance.

(a) By reference to Ohm's Law, show that the voltmeter reading V is given by the relation

$$V = \left(\frac{R_2}{R_1 + R_2}\right)E.$$

[2]

(b) Fig. 6.2 shows a circuit that includes a thermistor.

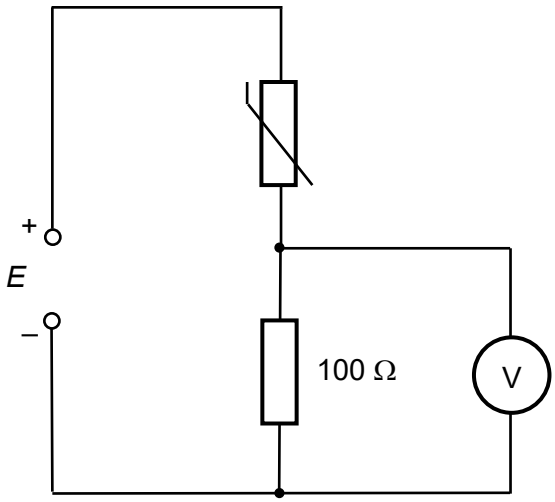

Fig. 6.2

For Examiner's Use

Describe and explain how the voltmeter reading changes as the temperature of the thermistor is increased.

……...

……...

……...

…..…….. [2]

(c) Fig. 6.3 shows a circuit that includes a potentiometer wire. It is used to test E_T, the e.m.f. of the test cell and the balance length is found to be *b*.

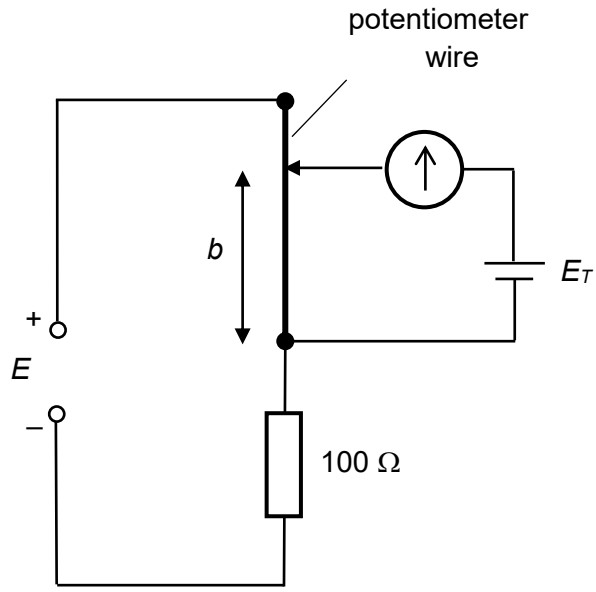

Fig. 6.3

(i) The potentiometer wire, of 1.00 m long, is made of nichrome wire of resistivity $1.57 \times 10^{-6}\ \Omega$ m and has a uniform radius of 0.10 mm. Determine the resistance of the potentiometer wire.

resistance = ... Ω [2]

(ii) Given that the ratio of $\frac{E_T}{E} = 0.20$, determine the balance length *b*.

b = ... m [2]