Answer **all** the questions in the spaces provided.

1 Capacitance measures the ability of an electrical component to store charge and is defined as the ratio of charge stored in a capacitor to the potential difference across it.

(a) The S.I. unit for capacitance is the farad (F). Express F in S.I. base units.

F = ... [3]

(b) A capacitor of capacitance 50 μF is charged using a cell in the circuit shown in Fig. 1.1.

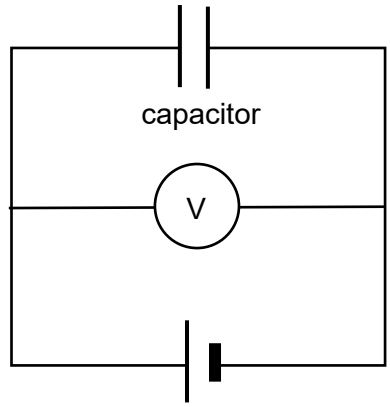

Fig. 1.1

(i) The voltmeter reads 2.20 V. By applying the given definition of capacitance, calculate the charge stored in the capacitor to 3 significant figures.

charge = ... C [1]

For Examiner's Use

(ii) The uncertainty of the voltmeter reading is ±0.05 V, and the capacitance of the capacitor has a tolerance of ±10%.

Express the charge stored in the capacitor in the form of $(Q \pm \Delta Q)$.

$(Q \pm \Delta Q)$ = ... C [3]

2 A person supports a load of 20 N in his hand as shown in Fig. 2.1. The system consisting of