$(Q \pm \Delta Q) =$ ..... C [3]

**2** A person supports a load of 20 N in his hand as shown in Fig. 2.1. The system consisting of the arm and load is equivalent to the system shown in Fig. 2.2. The rod represents the forearm, and *T* represents the tension exerted in the biceps. The forearm weighs 65 N.

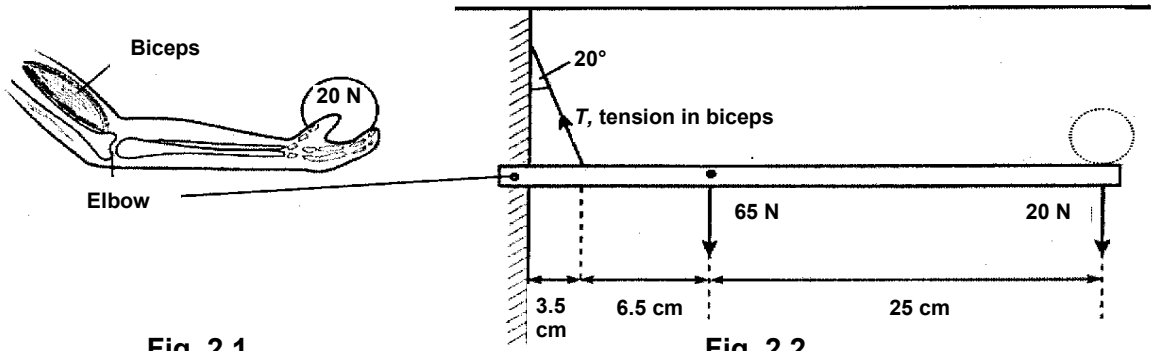


**Fig. 2.1** **Fig. 2.2**

**(i)** Show that the tension *T* in the biceps is 410 N.

[2]

**(ii)** Hence, determine the magnitude and direction of the force acting at the elbow.

*For Examiner's Use*

force = ..... N [3]

direction = ..... [1]