2 A rigid bar of mass 450 g is held horizontally by two supports A and B, as shown in Fig. 2.1.

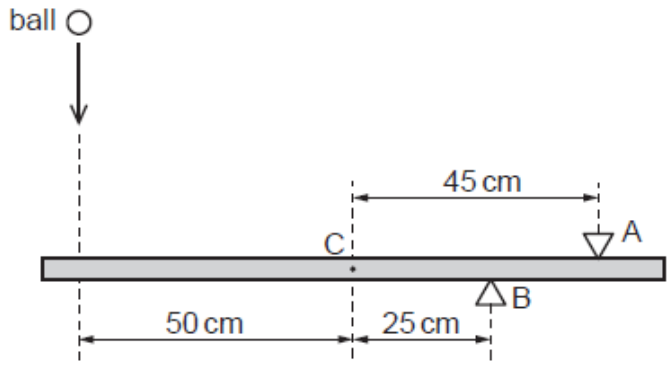

Fig. 2.1

The support A is 45 cm from the centre of gravity C of the bar and support B is 25 cm from C. A ball of mass 140 g falls vertically onto the bar such that it hits the bar at a distance of 50 cm from C, as shown in Fig. 2.1.

The variation with time *t* of the velocity *v* of the ball before, during and after hitting the bar is shown in Fig. 2.2.

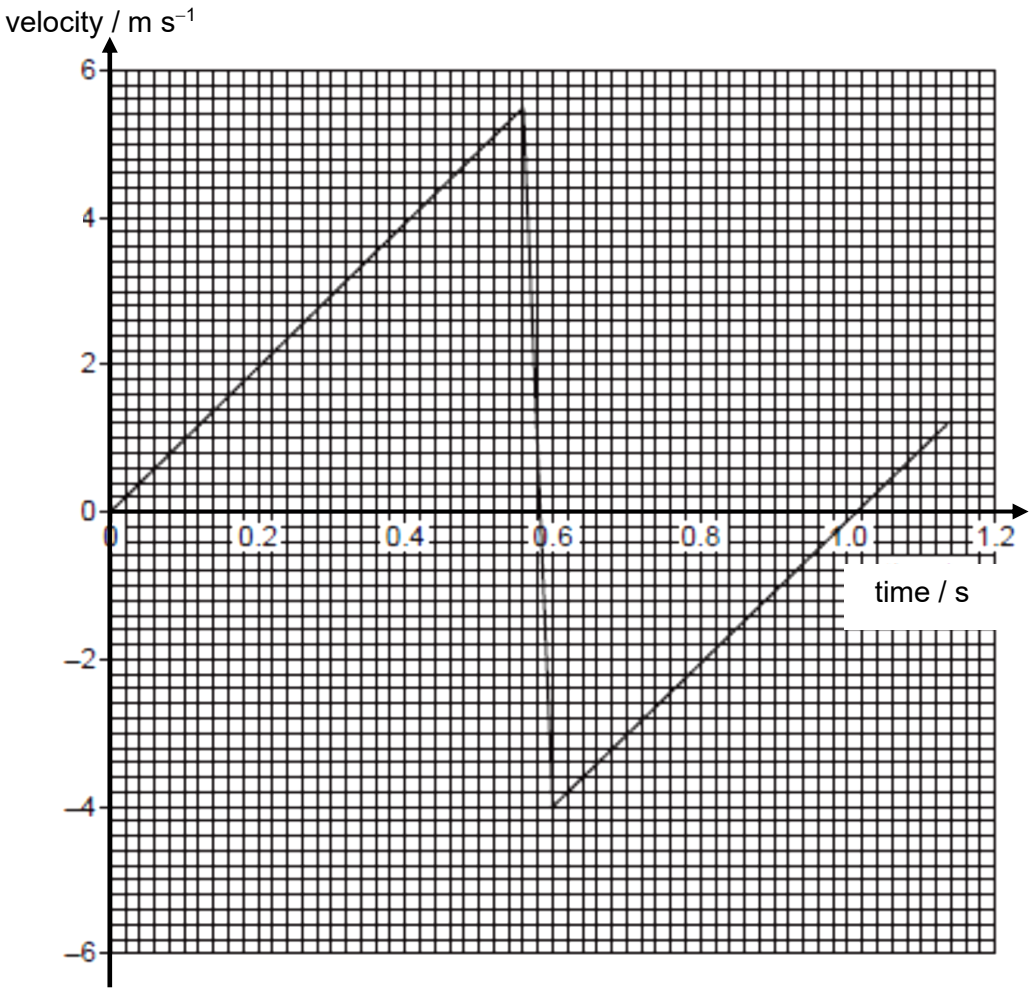

Fig. 2.2

(a) For the time that the ball is in contact with the bar, use Fig. 2.2 to determine

(i) the change in momentum of the ball,

change in momentum = ... N s [2]

(ii) the magnitude of the force exerted by the ball on the bar.

force = ... N [3]

(b) For the time that the ball is in contact with the bar, use data from Fig. 2.1 and **(a)(ii)** to calculate the magnitude of the force exerted on the bar by

(i) support A,

force = ... N [2]

(ii) support B.

force = ... N [1]