22 Two cells of e.m.f. E_1 and E_2 have internal resistances R and zero respectively. The cells are connected to resistors of resistances $3R$, $2R$ and R, as shown below.

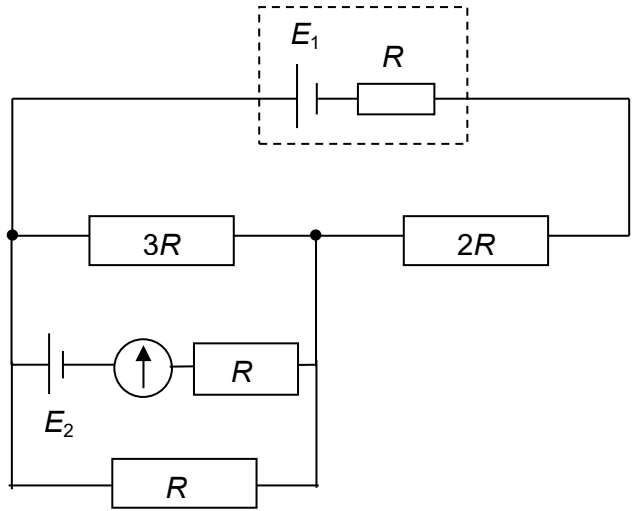

If the galvanometer shows no deflection, what is the ratio $\frac{E_1}{E_2}$?

A 0.60 **B** 1.0 **C** 1.7 **D** 2.0