4 Object P of mass 5.0 kg is resting on a frictionless surface and is in equilibrium while connected to a spring as shown in Fig. 4.1. The spring that is fastened to the wall has an elastic constant k = 100 N m^{-1}.

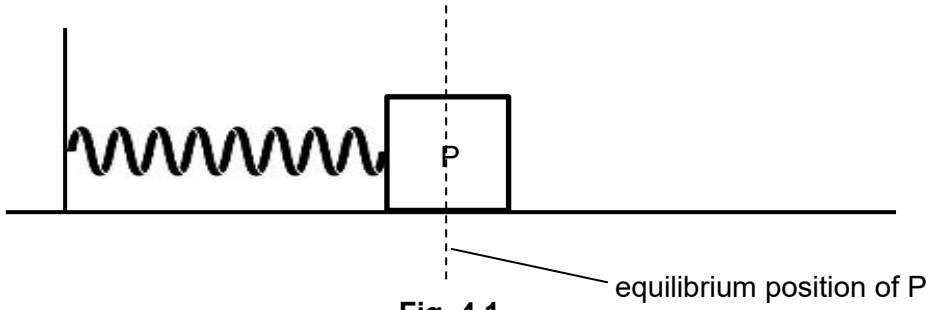

Fig. 4.1

(a) **(i)** P is displaced to the right and then released.

Explain why the subsequent horizontal motion of P while connected to the spring will be simple harmonic. Draw a free-body diagram of P in the space below to illustrate your answer.

.....

.....

.....

..... [3]

(ii) Hence or otherwise, show that the period of oscillation for P is 1.4 s.

[2]

(b) A second object Q of mass 3.0 kg is slowly pushed against P, compressing the spring by 0.20 m as shown in Fig. 4.2.

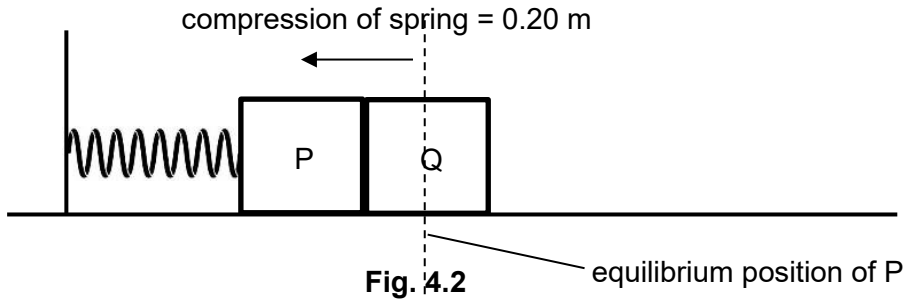

Fig. 4.2

The system is then released, and both objects start moving to the right on the frictionless surface.

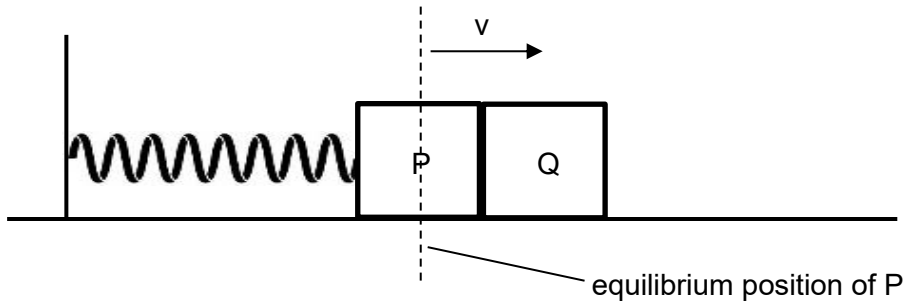

Fig. 4.3

(i) When P reaches the equilibrium point, Q loses contact with it and moves to the right with speed *v*.

Determine speed *v*.

v = ... m s^{-1} [2]

(ii) Determine the amplitude of the oscillatory motion of P after it loses contact with Q

amplitude = ... m [1]

(iii) Hence, determine the distance that P and Q are apart when the spring is fully stretched for the first time.

distance = …… m [2]

(c) While P is oscillating about the equilibrium point, object R is dropped on it just when P is at its amplitude. R sticks to P and then moves along with P for the subsequent motion.

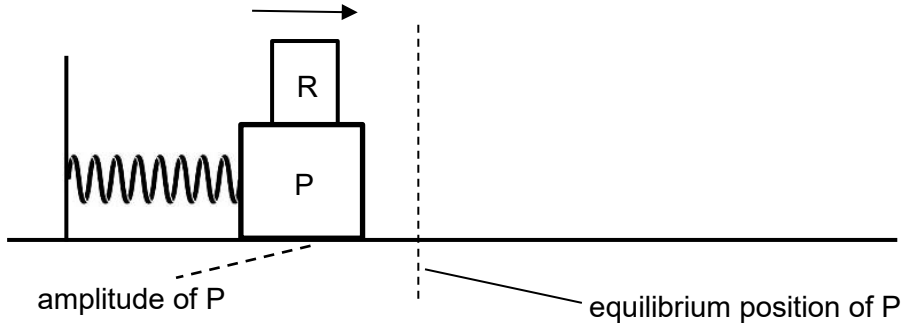

Fig. 4.4.

Explain how the subsequent frequency and amplitude of the motion will be different.

……

……

……

…… [2]