7 **(a)** In order to light up a set of lamps, each having a resistance of 20 Ω, a student sets up a circuit as shown in Fig. 7.1.

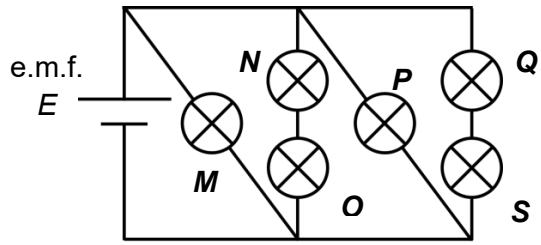

Fig. 7.1

(i) Determine the effective resistance of the circuit.

effective resistance = …… Ω [1]

(ii) State and explain the relative brightness of the lamps.

……

……

……

…… [2]

(b) In another circuit shown in Fig. 7.2, a uniform wire AB of length 80.0 cm and resistance 1.5 Ω is connected in series with a resistor of 5.0 Ω and a cell of e.m.f. 9.0 V with internal resistance 1.0 Ω.

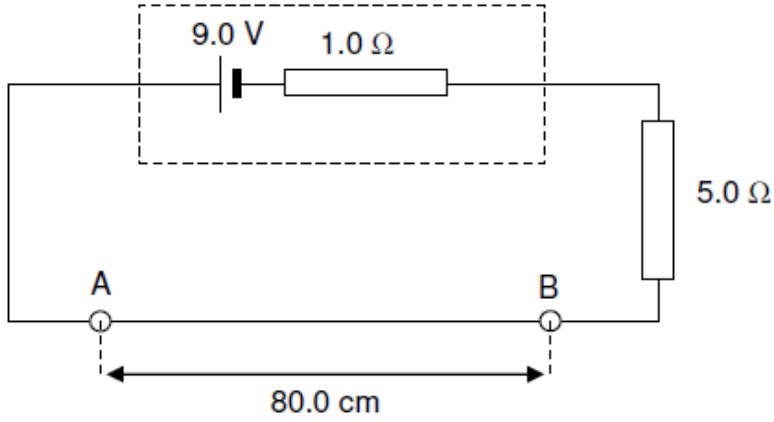

Fig. 7.2

(i) Calculate the potential difference across wire AB.

potential difference = ... V [2]

(ii) A cell C of e.m.f. 1.5 V and internal resistance 0.80 Ω is connected to the circuit in Fig. 7.2, as shown in Fig. 7.3. The movable contact D can be connected to any point along wire AB.

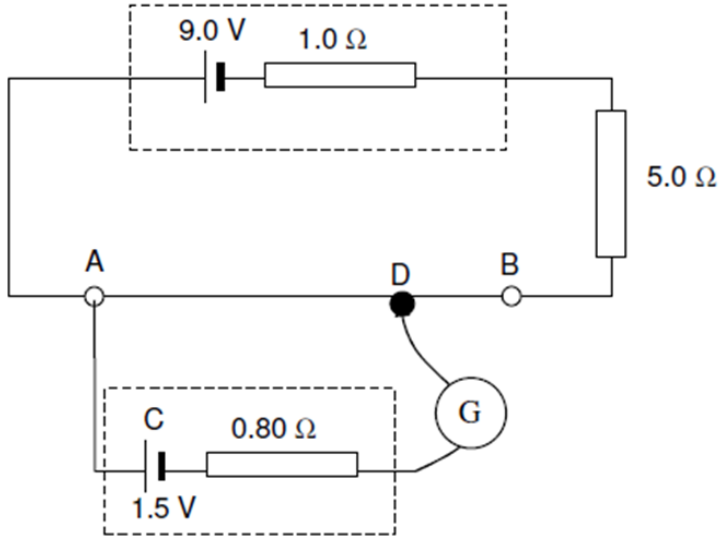

Fig. 7.3

Calculate the length of AD when there is zero current in the galvanometer.

length = ... m [2]

(iii) Explain what would happen to the length of AD when there is zero current in the galvanometer, if the 5.0 Ω resistor in Fig. 7.3 is replaced by a 3.0 Ω resistor.

.....

.....

.....

..... [1]