21 A NTC thermistor R_1 is connected to an ideal battery of constant e.m.f. with two other resistors R_2 and R_3.

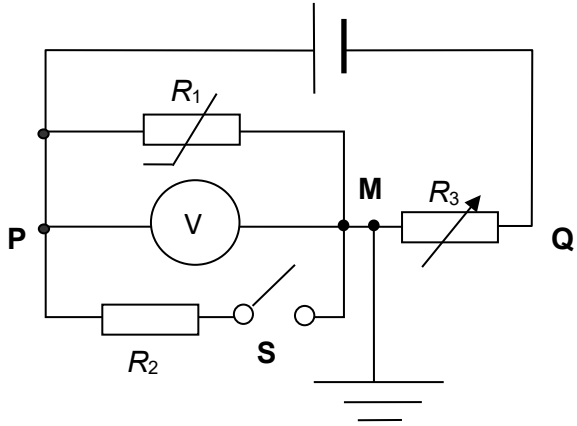

Assume that the voltmeter has infinite resistance.

Which of the following actions will cause an increase in the potential difference V measured by the voltmeter?

A Increase the temperature of the thermistor with S open

B Remove the earth connection at M with S open

C Close switch S

D Decrease resistance R_3 with S open