3 **(a)** State what is meant by *simple harmonic motion*.

.....

..... [2]

(b) A spring hangs vertically from a fixed point. A copper plate is attached to the free end of the spring as illustrated in Fig. 3.1.

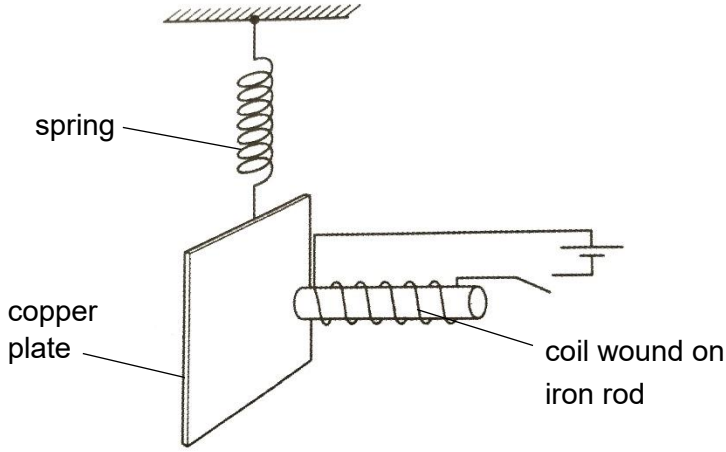

Fig 3.1

One end of a coil of wire, wound on an iron rod, is placed near to the copper plate.

The copper plate is displaced vertically and then released. The variation with time *t* of the vertical displacement *y* of the plate is shown in Fig. 3.2.

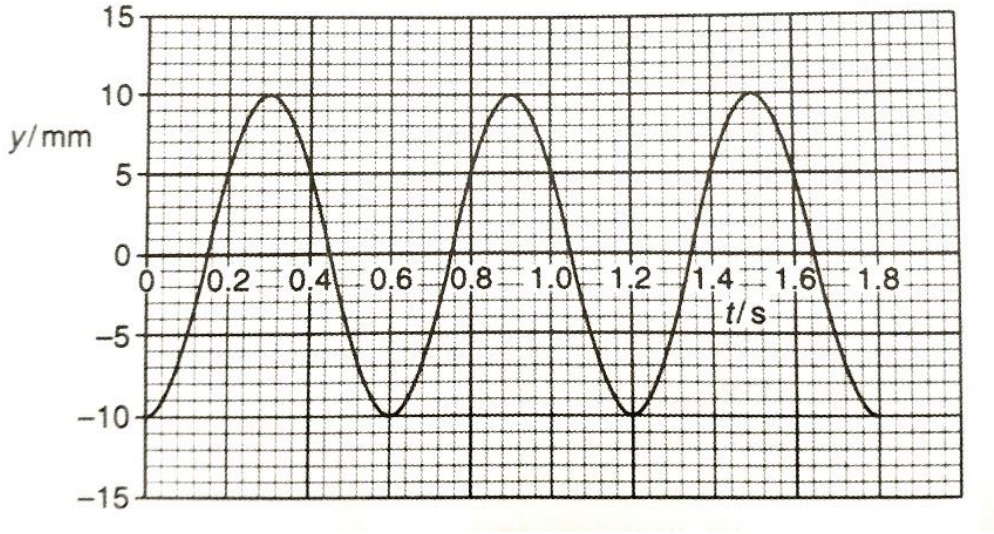

Fig 3.2

The copper plate undergoes simple harmonic motion. The mass *m* of the oscillating copper plate is 320 g.

(i) Determine the frequency *f* of the copper plate.

frequency = …… Hz [1]

(ii) Determine the maximum acceleration of the copper plate.

maximum acceleration = …… m s^{-2} [2]

(iii) Using your answer from **(ii)**, determine the maximum force exerted by the spring on the copper plate.

maximum force = …… N [2]

(c) When the switch is closed, the oscillation of the copper plate is lightly damped.

(i) On Fig 3.2, sketch the variation with time *t* of the vertical displacement *y* of the plate when the switch is closed. [2]

(ii) State the energy transformations that occur in the copper plate when the switch is closed.

.....

..... [1]