7 Read the following passage and then answer the questions which follow it.

Lithium solid-state batteries

Solid-state battery is a battery technology that uses both solid electrodes and solid electrolytes, instead of the liquid electrolytes found ordinary battery systems.

Fig. 7.1 shows an example of a lithium solid-state cell. A solid plastic film separates a lithium metal anode (positive electrode) from a composite cathode (negative electrode) which is in contact with aluminium foil.

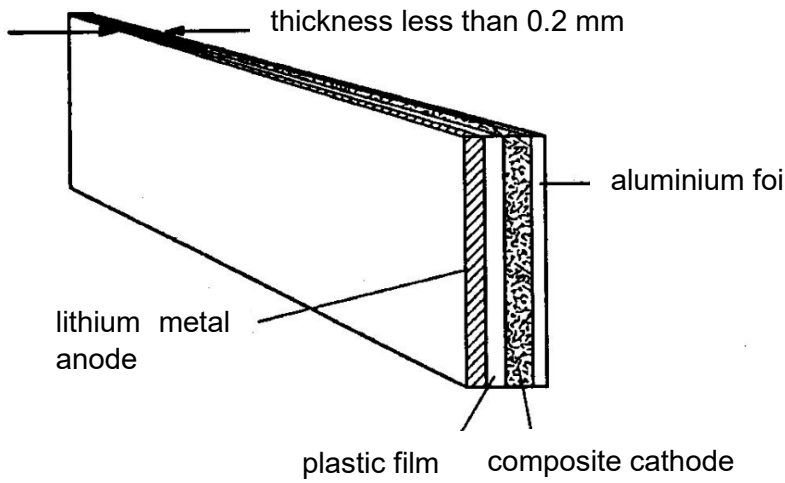

Fig. 7.1

The resultant cell can be constructed so that it has a large electrode area but is less than 0.2 mm thick. It is many ways similar to a sheet of paper and can be cut and formed into almost any shape. Lithium solid-state cells such as this are rechargeable and can be incorporated into the cases of equipment or into such items as credit cards.

The initial e.m.f. of the cell at full charge is 3.4 V but it rapidly falls to about 2.8 V on load and thereafter falls as shown in Fig. 7.2. The cell needs to be recharged when the e.m.f. reaches 2.0 V. In practice, its average e.m.f. is 2.5 V.

The current density, energy density and charge capacity all have to be considered for a particular application.

The recommended maximum value of discharge current density is 0.15 milliamperes per square centimetre of electrode area, the charge capacity is 3.6 coulombs per square centimetre of electrode area, and the energy density is 120 watt-hours per kilogram of cell mass.

Charging one of these cells should be carried out with a constant applied voltage of 3.4 V and with a current density limited to 2.5 mA cm^{-2}. A typical charging current against time graph is shown in Fig. 7.3 for a cell of electrode area 50 cm^2.

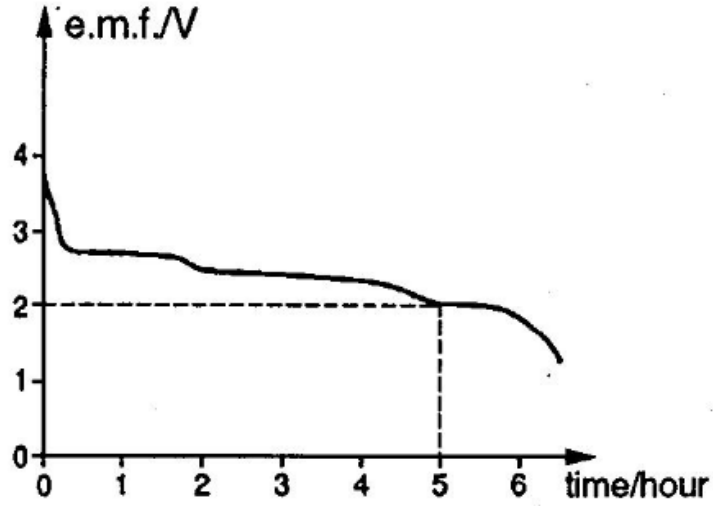

Fig. 7.2

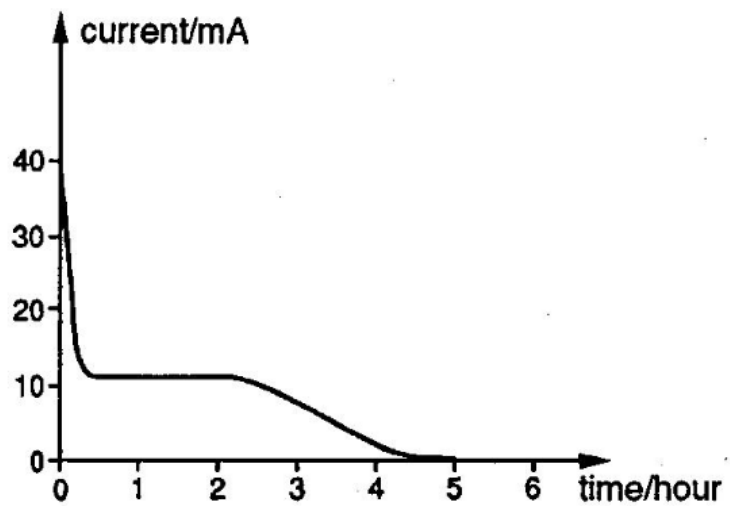

Fig. 7.3

For safety it is vital that

- cells should not be short circuited. (A fuse should be incorporated in any circuit with a cell of charge-storage capacity greater than 3600 coulombs.)
- cells should not be used in environments with a temperature above 140 °C.
- water or water vapour is kept away from lithium cells.

(a) Suggest one possible use of a lithium solid-state cell.

..... [1]

(b) Deduce from the units, and then write down, the meaning of the terms *current density* and *energy density*.

.....

..... [2]

(c) Answer the following questions for a cell of electrode area 50 cm^2.

(i) Calculate the charge-storage capacity of this cell.

charge-storage capacity = …… C [1]

(ii) Calculate the recommended maximum value of the discharge current.

maximum current = …… mA [1]

(iii) Determine how long this cell can supply the maximum current calculated in **(ii)**.

length of time = …… s [2]

(iv) Calculate the energy it supplies in this time, assuming that the e.m.f. has a constant value of 2.5 V.

energy supplied = …… J [2]

(d) Fig. 7.3 shows the charging graph for a cell of the same electrode area as in **(c)**.

(i) Describe briefly the variation with time of the charging current.

.....

..... [1]

(ii) State what is represented by the area under the graph.

.....

..... [1]

(iii) From the graph, estimate the average charging current over the 5-hour charging time.

average charging current = …… mA [1]

(iv) Calculate the energy used in charging the cell.

energy used = …… J [2]

(e) Using your answers to **(c)(iv)** and **(d)(iv)**, deduce the electrical efficiency of the charge/discharge cycle.

efficiency = …… % [2]

(f) Suggest reasons for **two** of the safety considerations.

.....

.....

.....

..... [2]

(g) Draw a diagram, using circuit symbols, to illustrate how you would connect a battery of cells which could produce a current of up to 300 mA at a voltage of approximately 10 V. In your answer, specify the electrode area of the individual cells.

[2]

End of Paper