7 **(a)** **(i)** Explain what is meant by the diffraction of a wave.

.....

..... [1]

(ii) A ripple tank is used to show the diffraction and interference of waves. On Fig. 7.1, plane wave-fronts are shown in two cases, approaching a single slit. Draw four wave-fronts to show the waves after they have passed through the slit in each case.

[3]

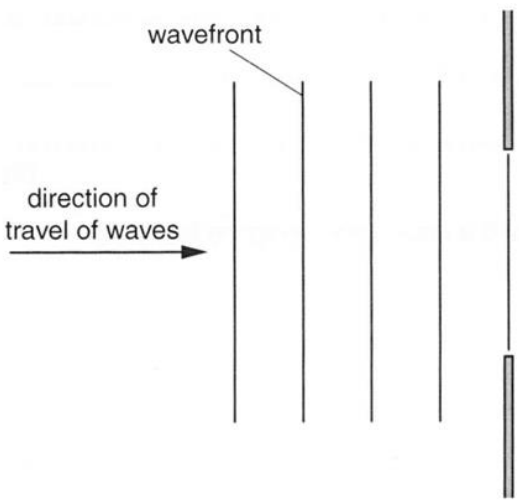

Wide slit

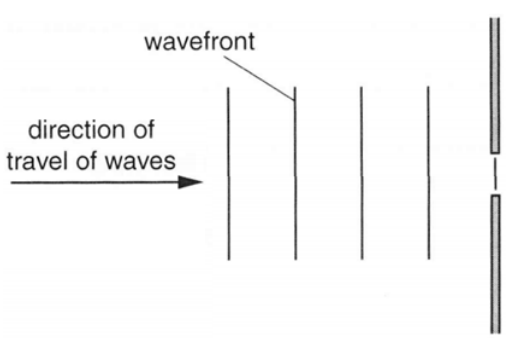

Narrow slit

Fig. 7.1

(iii) In a separate experiment using *double-slit arrangement*, two source interference of water waves were not observed when the slit widths are wide.

However, narrowing the slits while maintaining the same slit-to-slit separation produced obvious interference patterns.

Suggest why.

.....

.....

.....

.....

.....

.....

..... [3]

(b) **(i)** By reference to waves, state what is meant by *coherent sources.*

.....

.....

.....

..... [2]

(ii) Two sources $\mathbf{S_1}$ and $\mathbf{S_2}$ operate in phase to produce circular waves as shown in Fig. 7.2. (Note that the circles represent crests.)

Along the line **XY**, there is a series of alternate maxima and minima.

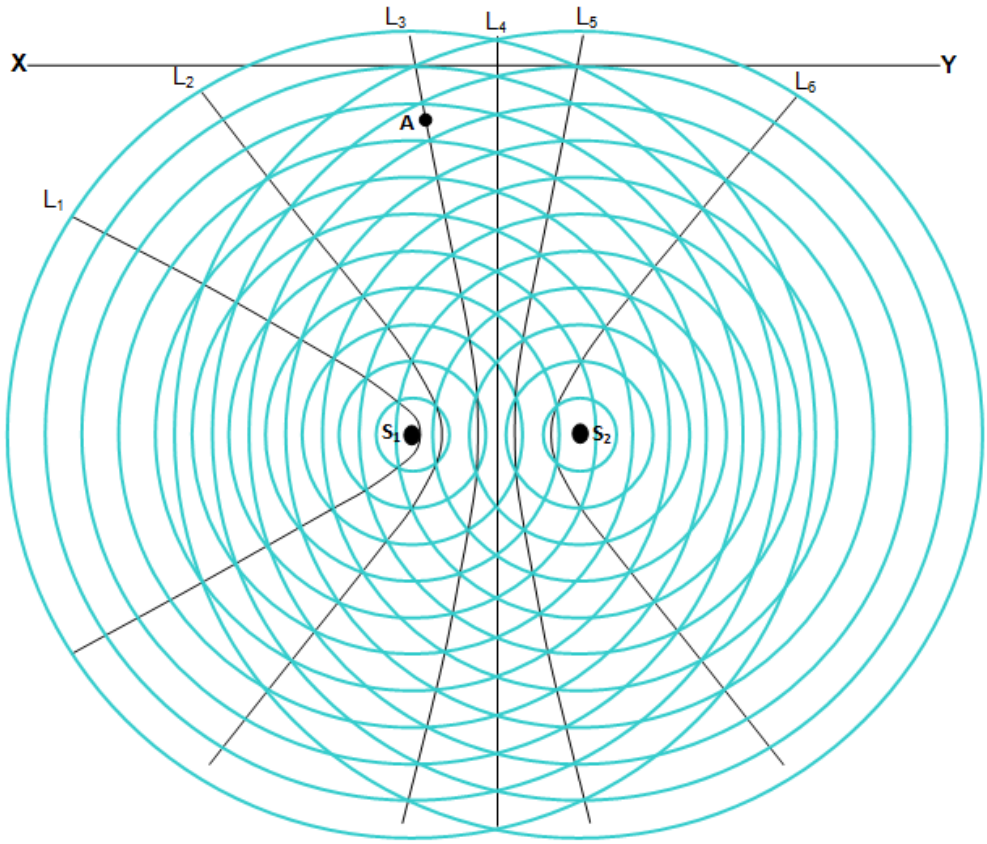

Fig. 7.2

1. Explain what lines L_1 to L_6 represent and whether point **A**, as indicated in Fig. 7.2, is a point of constructive or destructive interference.

.....

..... [2]

2. State the relationship between the magnitude of the path difference $S_1A - S_2A$ and the wavelength.

..... [1]

3. Draw, on Fig. 7.2, a line to show one direction along which the waves have minimum amplitude. Label this line as Z. [1]

4. If the separation of the sources is increased, state what would happen to the spacing between maxima.

..... [1]

(c) Monochromatic light is passed through a rectangular slit of width *b* of 0.20 mm. The light is observed on a screen placed 0.75 m from the slit, as shown in Fig. 7.3.

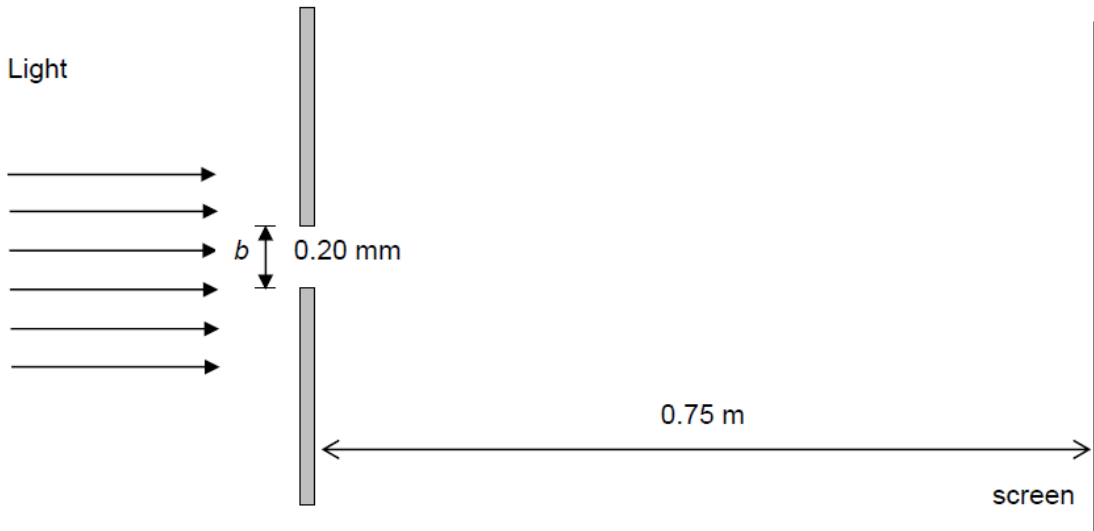

Fig. 7.3

Light passing through the slit is diffracted through an angle θ.
The variation of the intensity I of the light with the angle θ of diffraction is shown in Fig. 7.4. The maximum value of intensity is I_0.

The angular separations between successive minima are the same.

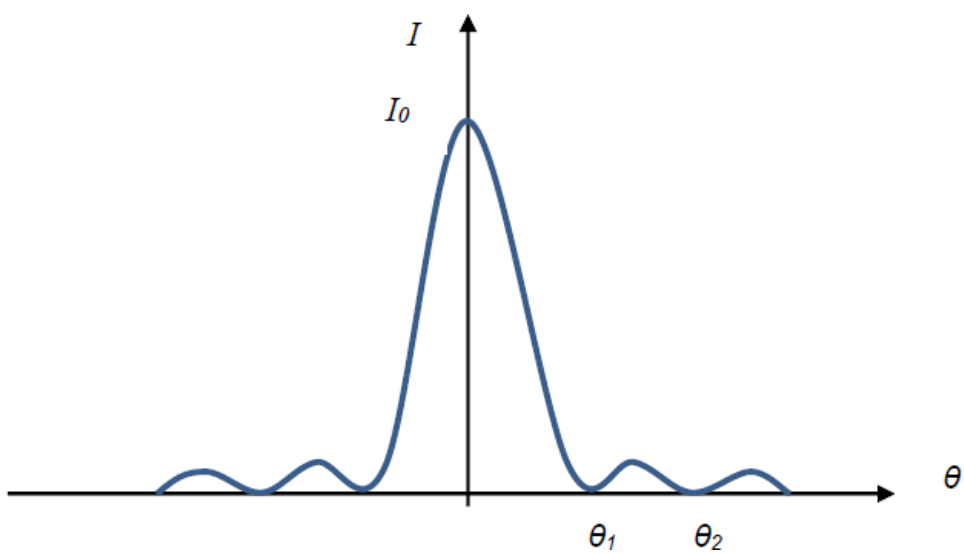

Fig. 7.4

(i) The value of θ_1, the angle of diffraction corresponding to the first order minima, is 0.169°. Determine the wavelength of the monochromatic light.

wavelength = …… nm [2]

(ii) Calculate the width of the central fringe, as observed on the screen.

width = …… mm [2]

(iii) Sketch, on the axes of Fig. 7.4, how the intensity I varies with angle θ if the slit width is halved.

[2]