9(a) (i) Define the *ohm*. [1]

(ii) On **Fig 9.1** below, sketch a graph to show how you would expect the current in a tungsten filament lamp to change as the potential difference across the lamp increases slowly from $-V$ to + V.

[1]

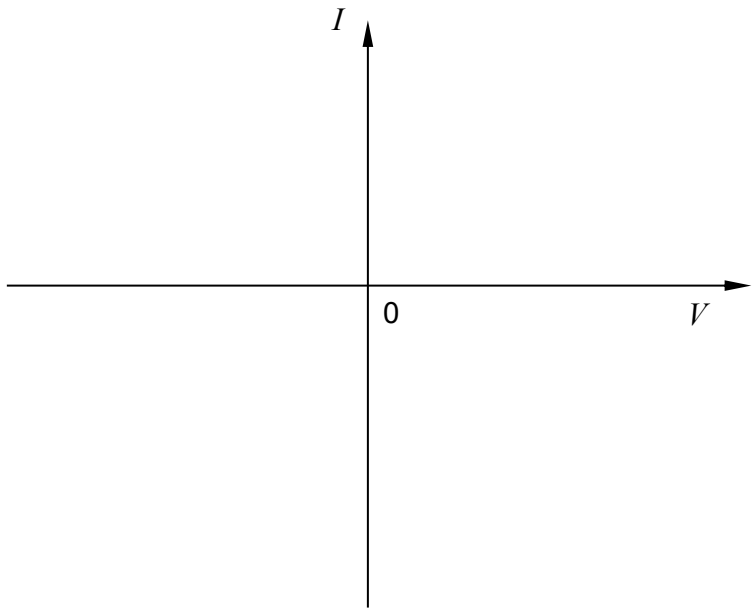

Fig 9.1

(iii) State how you would obtain the resistance of the lamp from your graph at a particular potential difference across the lamp. [1]

(iv) Draw a circuit set-up that could be used to investigate the *I*-*V* characteristics of a lamp as shown in **Fig 9.1**. [2]

(b) A circuit is setup as shown below in **Fig 9.2**. A cell *E* with internal resistance *r* is connected to a network of resistors.

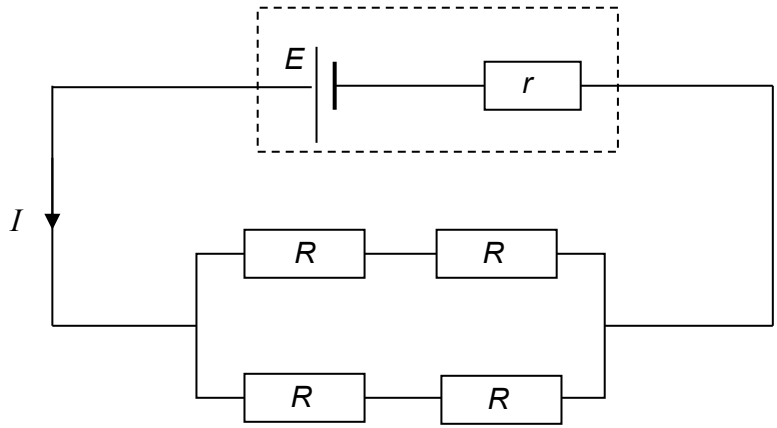

Fig 9.2

(i) Find the current I in the circuit, in terms of *R*, *r* and *E*. [2]

(ii) Show that the fraction of power dissipated in the external resistors by the battery is $\frac{R}{R+r}$. [2]

(iii) Suggest a reason for having 4 resistors connected in a network as shown in **Fig 9.2** instead of just using a single resistor of resistance *R*. [1]

(c) A resistor of resistance of $8.2\ \text{k}\Omega$ and a LDR (light dependent resistor) are connected in series, as shown below in **Fig 9.3**. The resistance of the LDR when light is shone on it is $420\ \Omega$ and when dark is 134 kΩ.

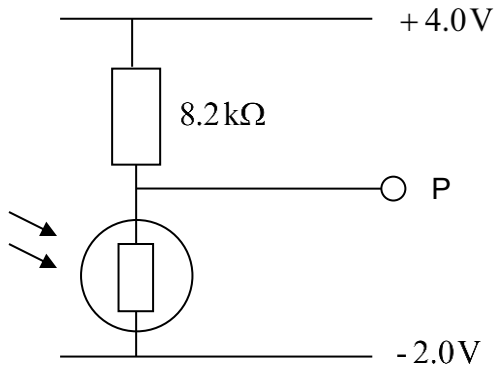

Fig 9.3

Calculate the potential at point P when

(i) light is shone on the LDR, [2]

Potential at P = _____ V

(ii) no light is shone on the LDR (dark). [1]

Potential at P = _____ V

(iii) An alarm is now connected in parallel with the LDR in **Fig 9.3** and a laser beam is directed at the LDR in a simple burglar alarm system. When a burglar blocks the laser that is shining continuously on the LDR, the alarm is triggered. Assume that the resistance of alarm is very large. Explain clearly how the LDR is used to turn on/off the alarm in such a system. [2]

(d) A circuit is set up as shown in **Fig 9.4** below. The resistance of the potentiometer wire has a resistance of 1.5 Ω and is 1.00 m long. The movable contact J can be connected to any point along wire XY.

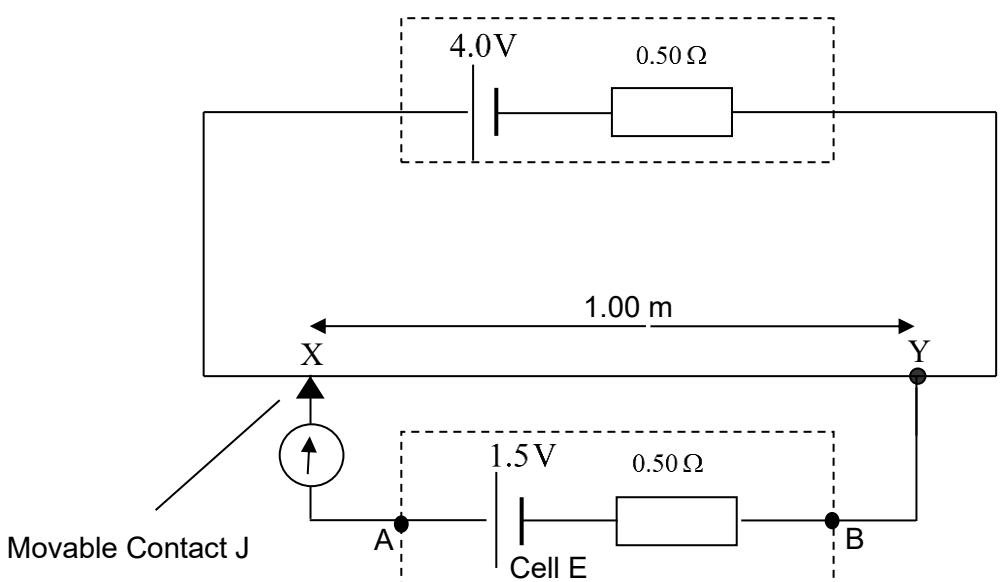

Fig 9.4

(ii) A 1.50 Ω resistor is connected across points A and B (in parallel with cell E). Determine the new distance of the contact J from X, such that there is no deflection in the galvanometer. [3]