5 **(a)** The graph Fig. 5.1 shows how the resistance, R_R, of a metal resistor and the resistance, R_{Th}, of a thermistor change with temperature.

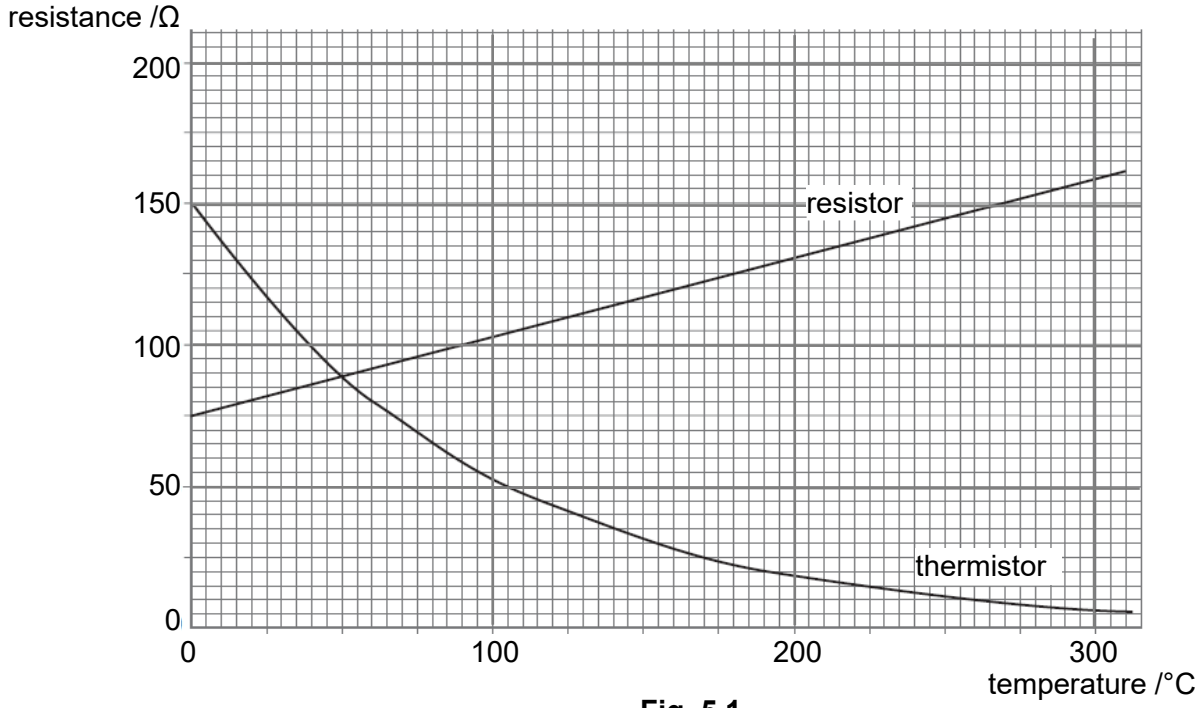

Fig. 5.1

(i) State the values of the resistance R_R and R_{Th} at a temperature of 105 °C.

R_R = ...Ω [1]

R_{Th}= .....Ω [1]

(ii) The resistor and thermistor are connected in series to a 12 V battery of negligible internal resistance, as shown in Fig. 5.2.

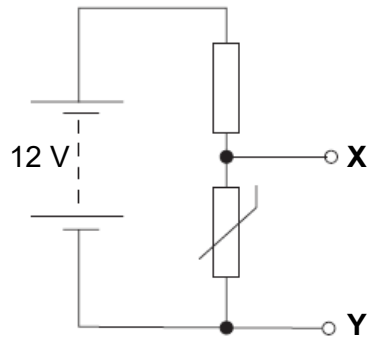

Fig. 5.2

Calculate the potential difference across **XY** at 105 °C.

potential difference across **XY** = ... V [2]

(iii) Assuming that the temperature of the resistor always equals the temperature of the thermistor, deduce the temperature, without any further calculations when the potential difference across the resistor is 6.0 V. Explain your answer.

……

……

…… [2]

(b) Fig. 5.3 shows a potentiometer, made from uniform resistance wire AB of length l and resistance R, connected in series with an e.m.f. source E.

It is used to change the potential difference across an appliance of resistance S.

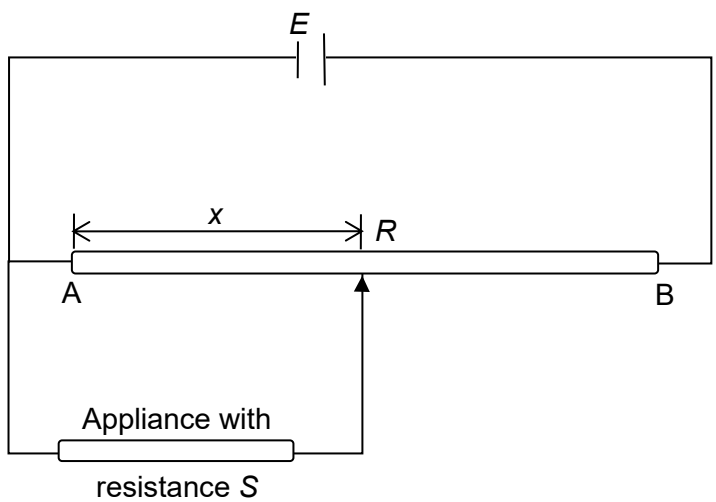

Fig. 5.3

(i) Derive an expression of the potential difference across the appliance as a function of the distance x of the sliding contact from the end A of the resistance wire in terms of E, x and l . Explain your working clearly.

expression of potential difference = ... [2]

(ii) Hence or otherwise, calculate the current through the appliance when

E = 5.0 V, x = 20.0 cm, l = 1.00 m and S = 10.0 Ω.

current through appliance = ... A [1]

(iii) The appliance is removed and replaced with a cell of unknown e.m.f. ε and a galvanometer is connected in series with the cell, as shown in Fig. 5.4.

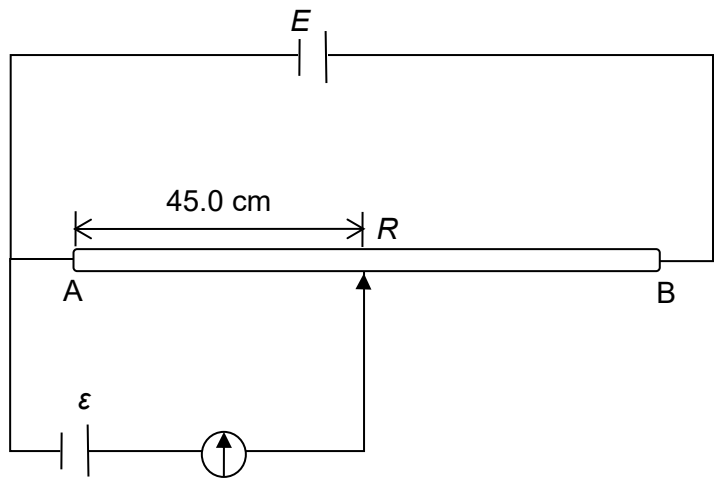

Fig. 5.4

The galvanometer shows null deflection when the sliding contact is at the 45.0 cm mark. Calculate ε, using the values of E and l given in **(b)(ii)**.

ε = ... V [1]