6 **(a)** State what is meant by the photoelectric effect.

……....

……....

……..... [2]

(b) Light shines on a metal surface which is part of the circuit shown in Fig. 6.1 below. The wavelength of the light is shorter than the threshold wavelength, λ_m of the metal.

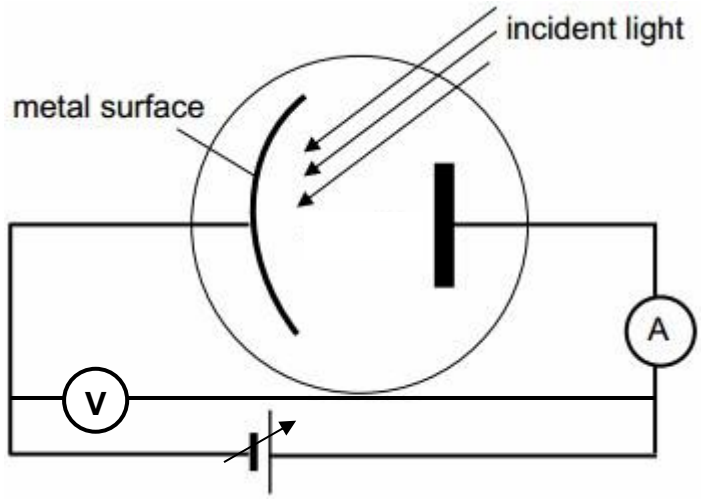

Fig. 6.1

Fig. 6.2 below shows the variation of ammeter reading with voltmeter reading.

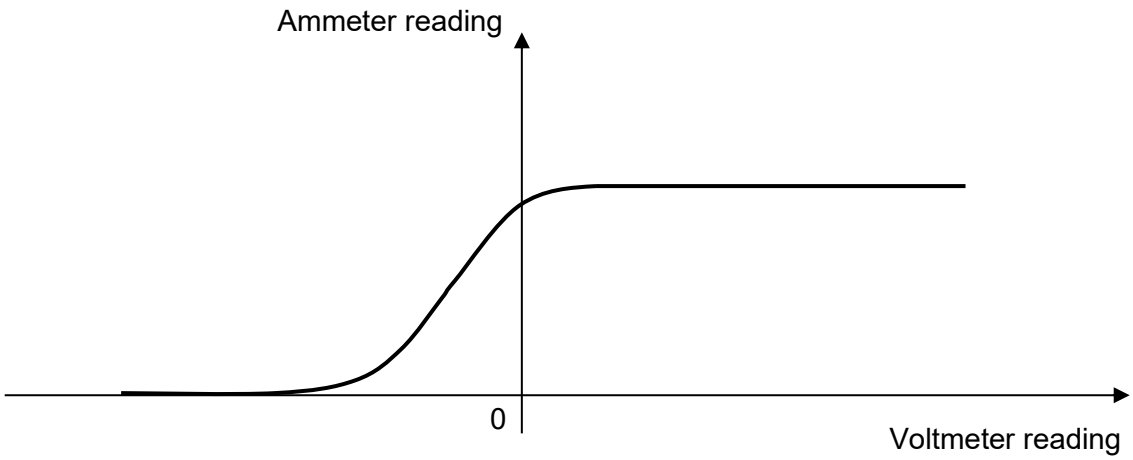

Fig. 6.2

(i) The incident light has now a longer wavelength but the same intensity as the earlier light. This new wavelength is also shorter than λ_m. Sketch, on Fig. 6.2, the new graph.

[2]

(ii) At constant frequency of incident light, use quantum theory to explain why

1. photocurrent is proportional to intensity of the light, and

……..

……..

……..

……..

…….. [2]

2. there is hardly any delay in time between irradiation of the metal surface and emission of electrons from the metal surface.

……..

……..

…….. [1]

(c) Fig. 6.3 shows the experimental set-up for an electron diffraction experiment.

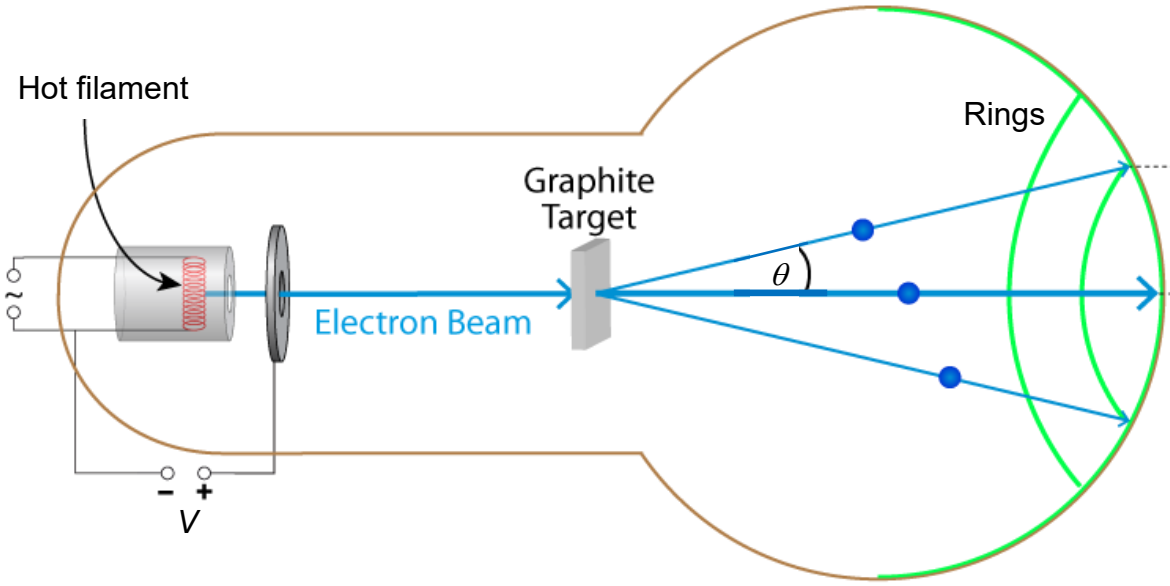

Fig. 6.3

Bright rings appear on the curved screen.

When V was 625 V, it was found that first off-centre maxima (ring) occurred at $\theta = 9.96°$.

The diffraction of the electron beam is in accordance to the following expression

$$2d \sin \theta = n \lambda_{dB}$$

whereby d is the inter-atomic distance in the target, n the order number and λ_{dB} the de Broglie wavelength of an electron in the beam.

(i) Determine the values of

1. λ_{dB} , and

λ_{dB} = …… m [2]

2. d.

d = …… m [2]

(ii) State and explain what happens to the rings when the value of V is decreased.

……..

……..

……..

……..

……..

…….. [4]