6 Fig. 6.1 shows the main components of a mass spectrometer which are an ion chamber and a velocity selector. The positive ions emerging from the ion chamber, pass through the velocity selector consisting of regions **R** and **S**. A uniform electric field and a uniform magnetic field (indicated by the shaded area) are applied in region **R**. While only a uniform magnetic field (indicated by the shaded area) is applied in region **S**.

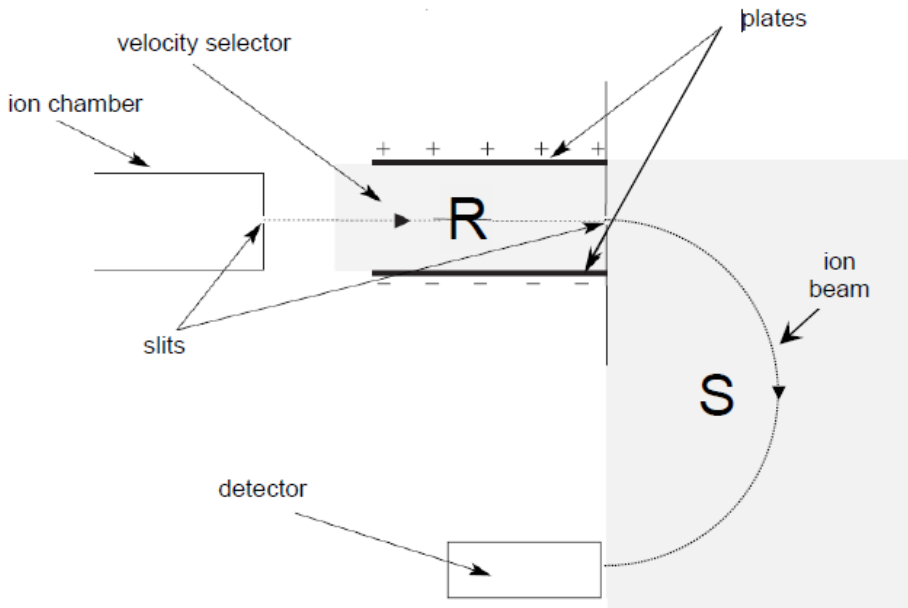

Fig. 6.1

(a) Draw the electric field lines between the plates in the region **R** of the velocity selector in Fig.6.1. [2]

(b) Suggest the purpose of the two slits.

.....

..... [1]

(c) In the regions **R** and **S**, uniform magnetic fields are applied so that the beam of positive ions is undeflected in **R** and deflected into a circular path in **S**.

(i) State the direction of the magnetic fields in regions **R** and **S**.

region **R** = ... [1]

region **S** = ... [1]

(ii) Explain why positive ions passing through the second slit have the same velocity regardless of their mass.

……..

……..

……..

……..

……..

……..

……..

…….. [3]

(iii) State and explain what happens to the ions that move slower than the ones that pass through the second slit.

……..

……..

……..

…….. [2]

(d) A student sets up the apparatus shown in Fig. 6.2(a) and (b) to determine the acceleration of a cart down a ramp. Fig. 6.2(a) shows the set−up from the front view and Fig. 6.2(b) shows the side view of the set−up.

As the cart passes the coils, which are suspended, an e.m.f. is induced in each coil. The

computer. The voltage sensors, datalogger and computer are not drawn Fig. 6.2(a) and Fig. 6.2(b). Fig. 6.3 shows the computer printouts after one test.

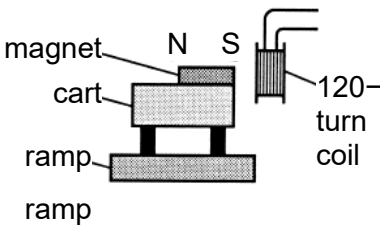

Fig. 6.2(a)

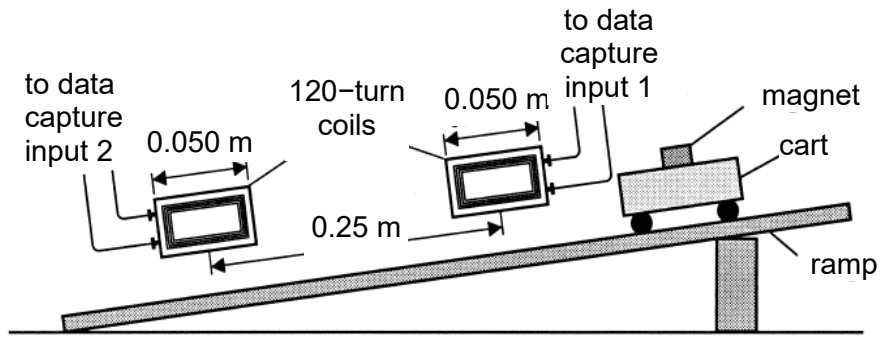

Fig. 6.2(b)

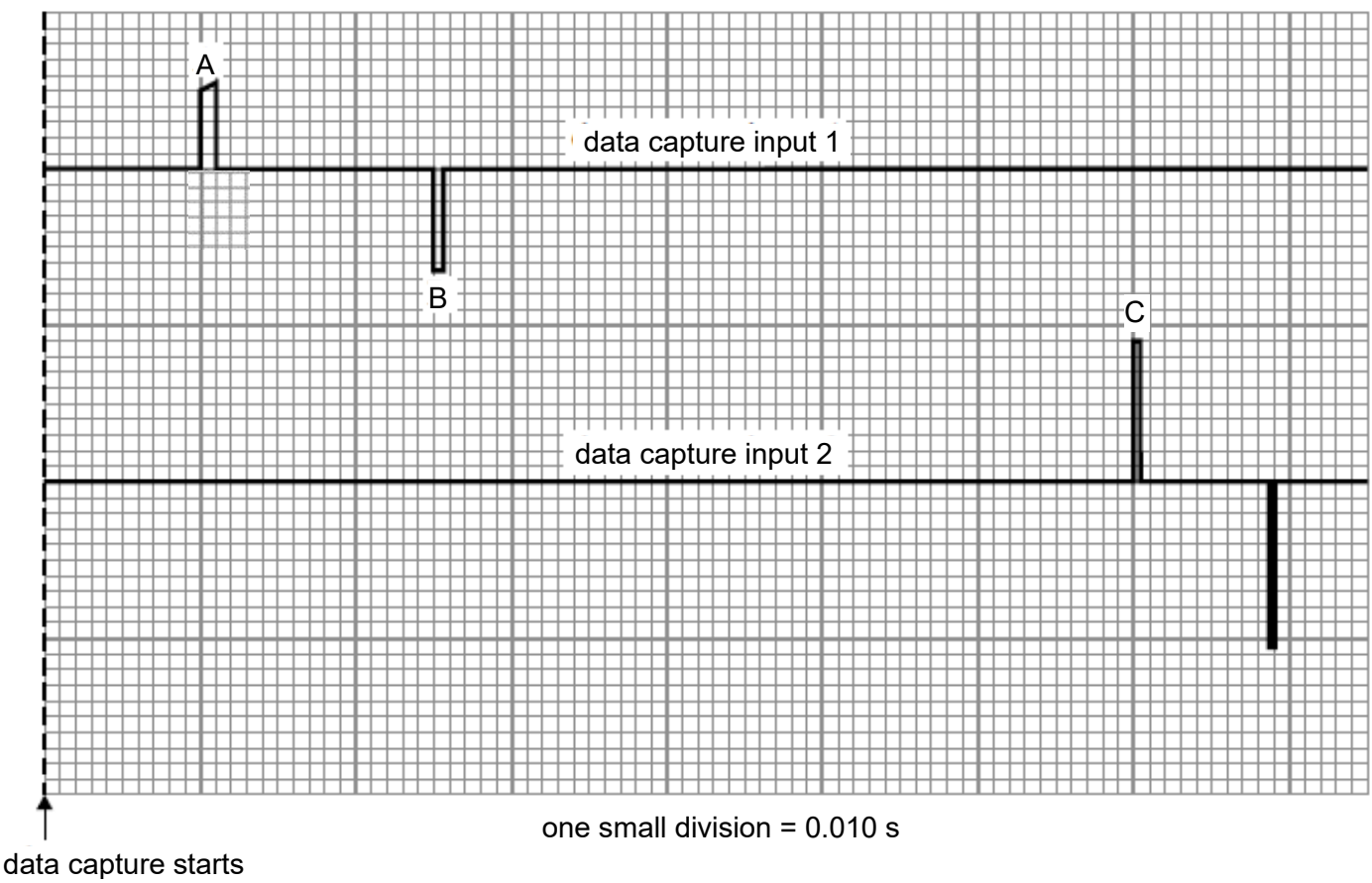

Fig. 6.3

…… ……..... [1]

(ii) pulse **B** is in the opposite direction to pulse **A**,

(iii) the amplitude of pulse **C** is larger than pulse **A**.

…….....

…….....

…….....

……..... [2]