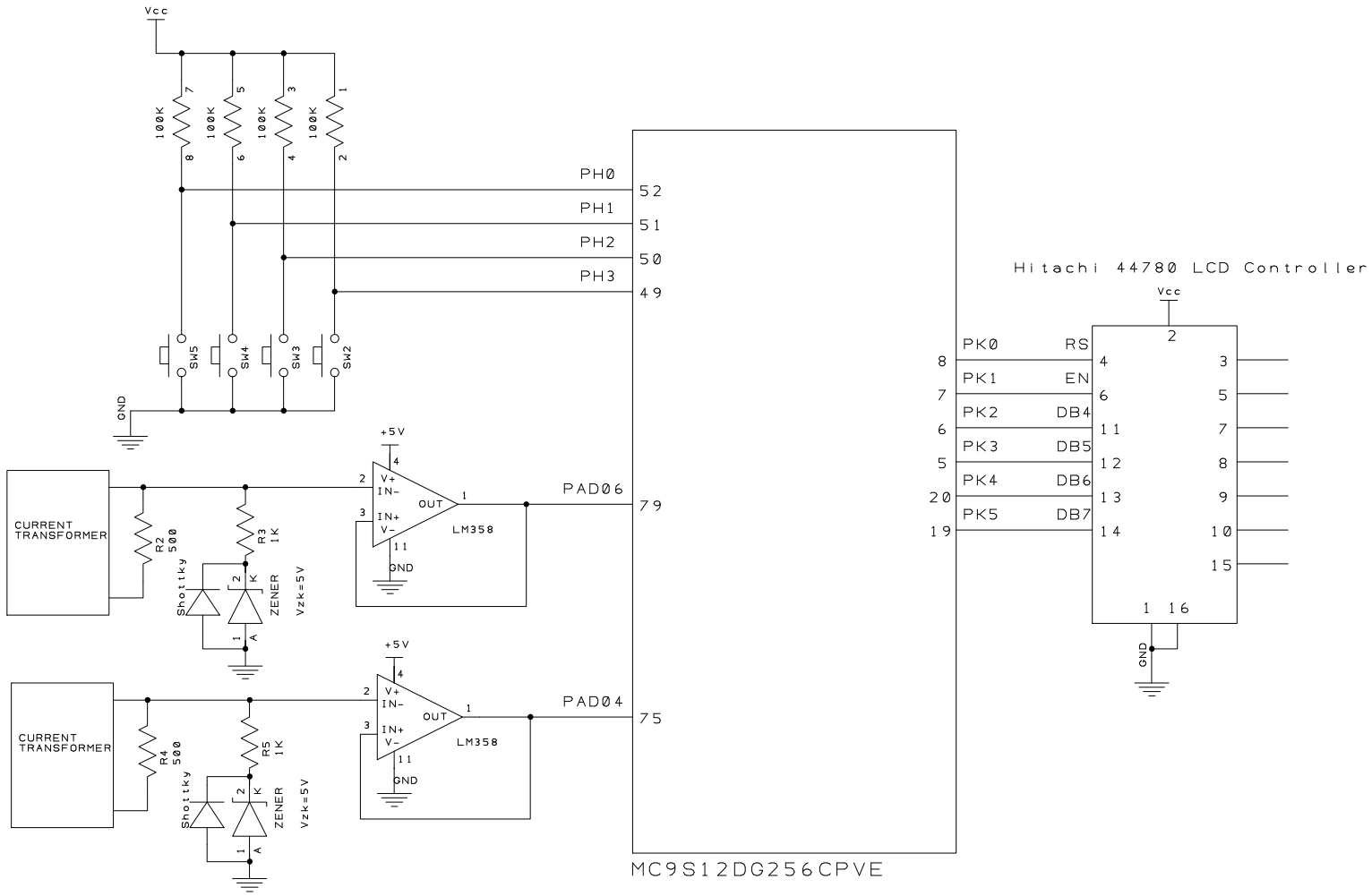

E	D	C	B	A	Drawn	Check	Projection Do Not Scale	LEE SICHELLO 200259098
Drn	Drn	Drn	Drn	Project SMART POWER BAR			Client EDDY McDONALD	
Chk	Chk	Chk	Chk	Title			Filename MAIN_CIRCUIT.PCB	Drawing No. 1

Sheet 1 of 1