AI based Automatic alarm generation and dropping of payload at a particular object through a Drone

Ministry: Ministry of Defence

PS Code: 1416

Problem Statement Title: AI based Automatic alarm generation and dropping of payload at a particular object through a Drone

Team Name: wolfpackNSUT

Team Leader Name: Ishaan Kulkarni

Institute Code (AISHE):

Institute Name: Netaji Subhas University of Technology

Theme Name: Disaster Management

Idea/Approach Details

This project aims to develop an innovative Disaster Response Drone System. This will include **drones** equipped with equipped with cutting-edge computer vision, object detection, and resource allocation algorithms.

- Network of drones will be deployed in disaster hit areas.
- Victims are identified using state of the art **CV** algorithms. Processing is done using **neural-networks** in the onboard microcontroller.
- **Cloud computing** is used to offload computing activities to the cloud to perform real-time data processing and decision making.
- Details of identified victims are stored in the **backend** and users and authorities can access this using out interactive **web-app.**
- We use a **work gear claw** as a payload dropping mechanism.
- **Payload dropping algorithms** are implanted to make sure there is a fair distribution of supplied.
- An **alarm** system is used to locate the victims exact geographic location so that search teams can find them.
- **Cost analysis** methods are used to reduce the cost of drone production.
- Drones relay back important information about the situation using several sensors on board.

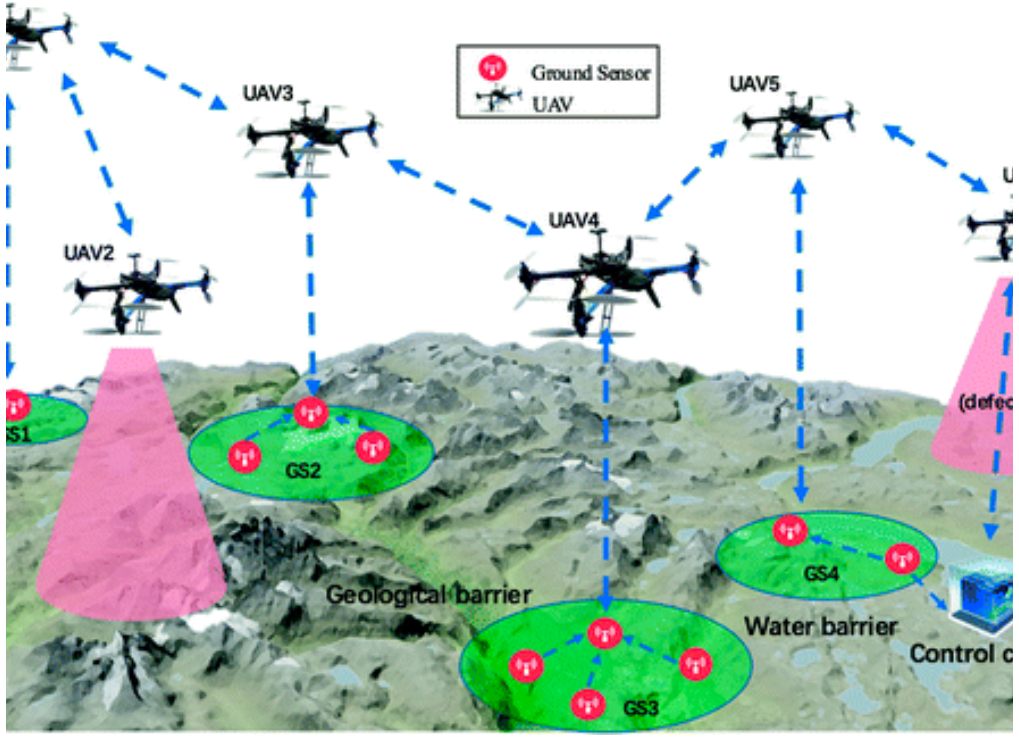

Technology Stack

mongoDB, aws, OpenCV, docker, PyTorch, tailwindcss, React, node, Keras, Firebase, NEXT.JS, SQL

Drone Architecture

1. Intel® RealSense depth camera
- Ideal for low light and wide FOV. Uses stereo vision to calculate depth.

2. Jetson Nano microcontroller
- 128 core Nvidia GPU.
- Allows us to run multiple neural networks in parallel for CV applications.

3. GPS module
- SparkFun GPS-RTK2 Board
- High precision GPS tracker for planning flight paths.

4. Flight controller
- Used to manually control the drone for special operations that can't be programmed into a predetermined flight plan.

5. Telemetry transmitter
- Flight data is relayed back to ground stations for monitoring.

6. Electronic speed controllers
- To control the speed and direction of motors to perform maneuvering.

7. Brushless motors

8. LIPO battery
- Powers the drone.

9. Power distribution board (PDB)
- Connects to LIPO and provides power to all components of the drone.

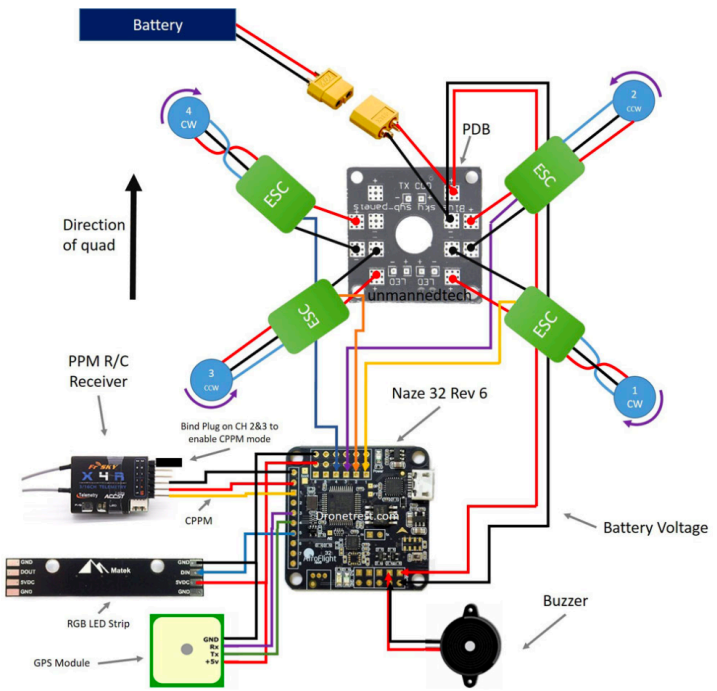

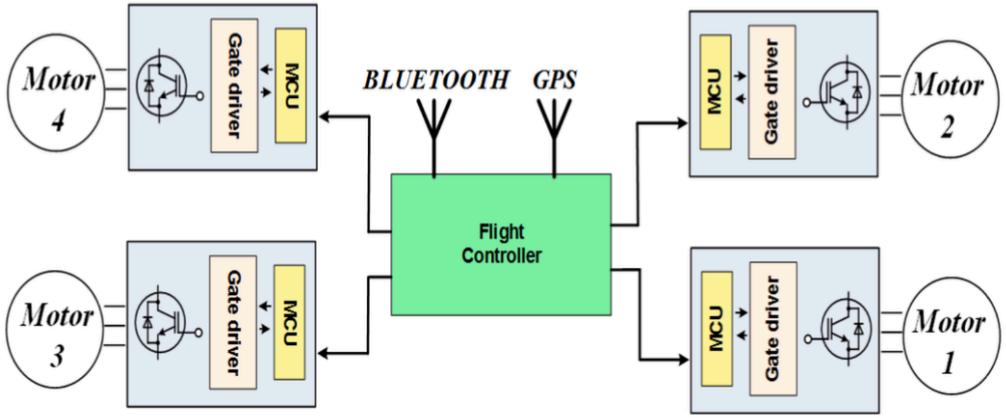

Object Detection using Computer Vision

Every drone has a retrained computer vision module faceable of object detection, face recognition and obstacle avoidance.

3 step object detection algorithm:

1. Color detection

The initial phase of the algorithm works on detecting any frame that contains the color of the target object. (green in our case)

2. Edge detection

Detect the edges of the target object.An edge detection operator is used to detect a wide range of edges in these images.

3. Calculation of centroid of each object.

Determine the centroid of the object using real time position.

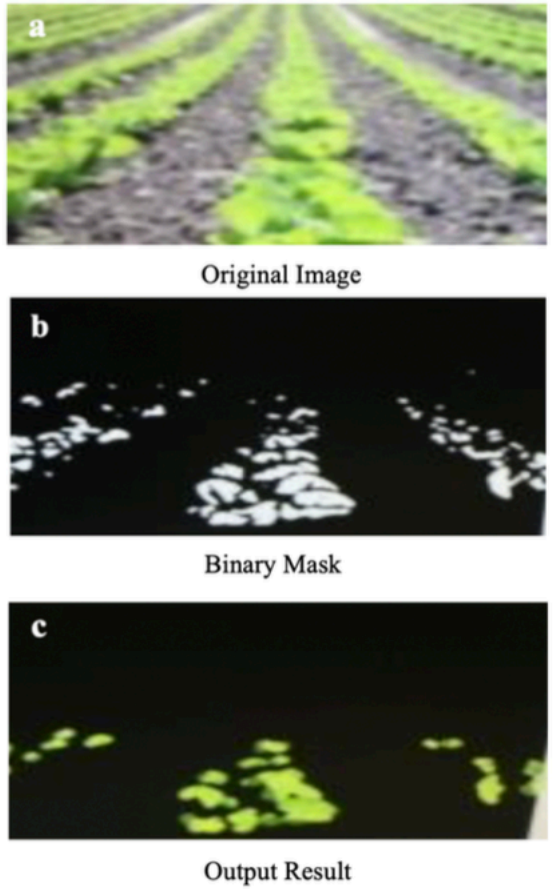

Fig: Process of color detection.

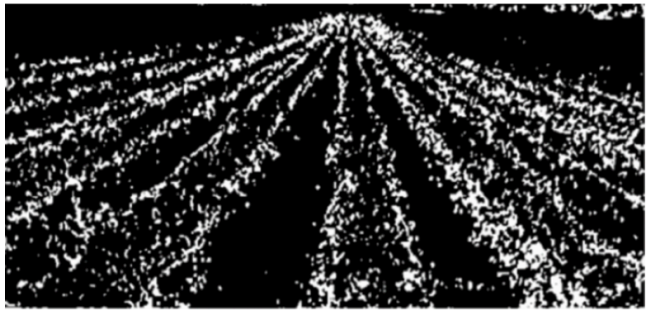

Fig: Results after edge detection and Hough transformation of green object

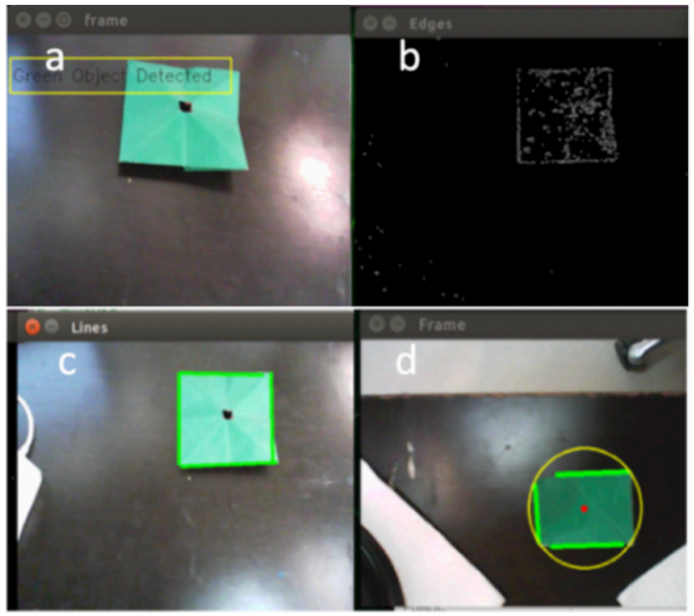

Web Application

The web application is accessible by common citizens and search authorities.

- Common users can register missing people on the app.
- Search authorities can manager the drone search operations using the app.
- Telemetry data sent back by the drone is visible here.
- In case of remote operations, search authorities will be able to control the drone using the web app.
- Once the drone located a missing individual registered on the app, a notification is sent to the admin.
- Payload distribution heat map can be seen on the app.

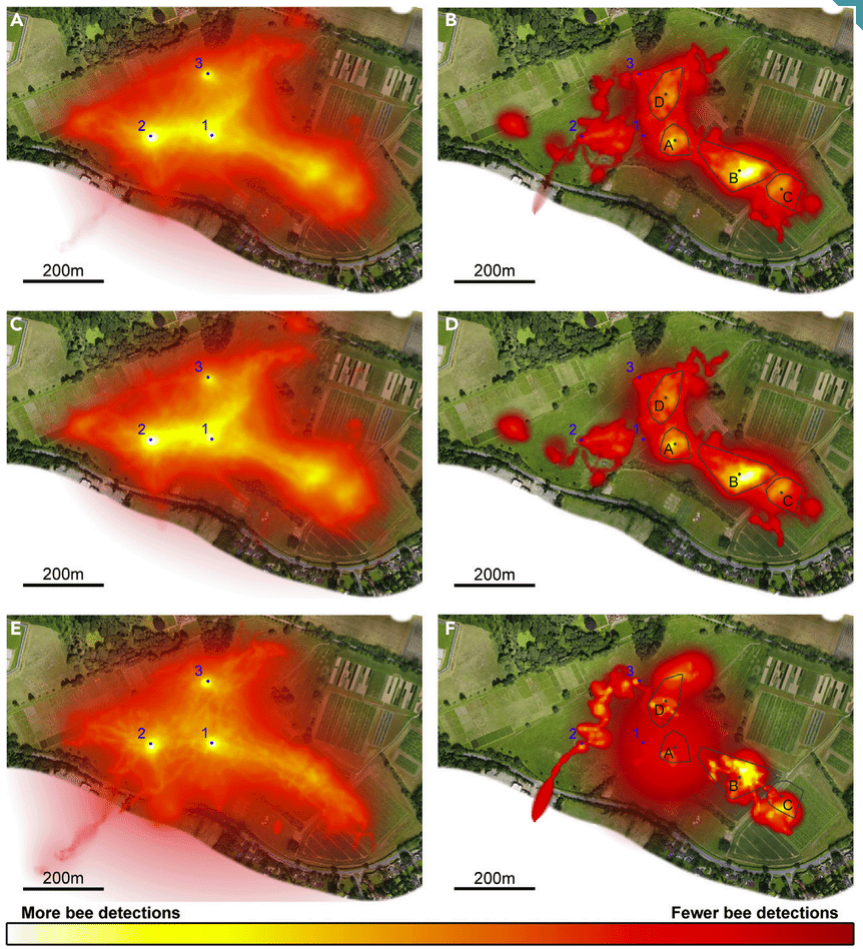

Cloud Computing

Cloud computing is used to offload computationally heavy operation to the cloud.

- Data collected by drones is offloaded to cloud to perform computational expensive operations like data analytics. This makes it scalable.
- Cloud storages offer large data storage for improve neural network efficiency.
- Cloud platforms can be leveraged to perform complex AI algorithms on the collected data to design an efficient flight path.
- Data visualisation is faster with interactive dashboards.
- Data is more secure which is critical in disaster management applications.

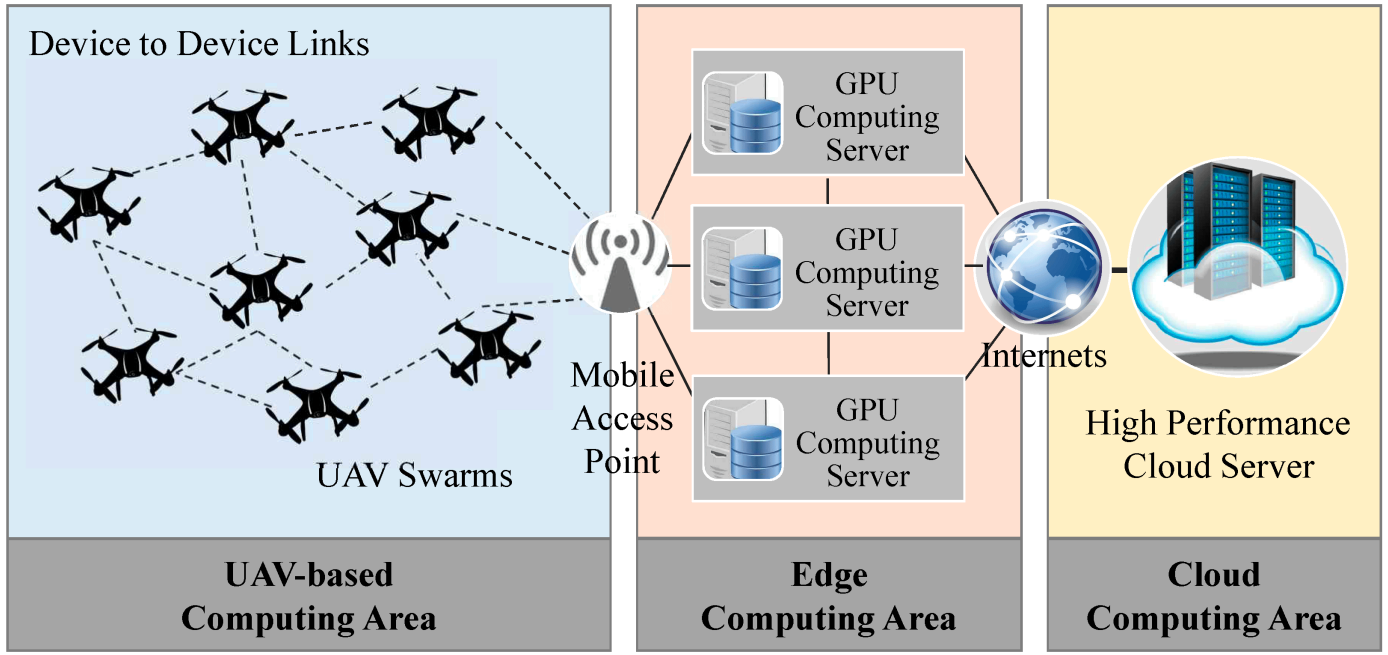

Backend

Managing disaster-related data collected by drones requires a robust backend infrastructure to process, store, analyze, and disseminate critical information effectively.

- **Geospatial Databases:** Databases like PostGIS or GeoMesa are essential for handling geospatial data, including drone imagery, terrain models etc.
- **Big Data Technologies:** Apache Hadoop & Apache Spark can be used for distributed data processing and analytics of large-scale drone data sets.
- **Data Processing and ETL Tools:** Apache Nifi, Apache Kafka are used for data extraction, transformation.
- **NoSQL Databases:** MongoDB can store semi-structured or unstructured data. It's suitable for storing diverse data types, such as images, videos, and sensor readings, which drones often collect during identification tasks.
- **Object Storage:** Amazon S3 for storing large media files, such as images and videos captured by drones, cloud-based object storage services are a cost-effective choice.

Resource Allocation Algorithms

Resource allocation algorithms for drones in disaster relief scenarios involve optimizing the delivery of payloads, such as food, medical supplies, or rescue equipment, to different people in disaster-hit areas.

- We need to ensure that different drones don't deliver relief packed to the same person over and over.
- Drones can prioritize delivering payloads to the **nearest survivors** or those in critical conditions.
- **A*** is used to find an optimal path for drones to reach individuals in need while minimizing distance, travel time, or other relevant factors.
- **Multi-agent systems** can use distributed algorithms to optimize payload deliveries while avoiding collisions and conflicts bw drones.
- **Game theory** models resource allocation as a strategic interaction between drones and survivors. This helps determine the best allocation strategy when multiple entities are involved and have conflicting objectives.

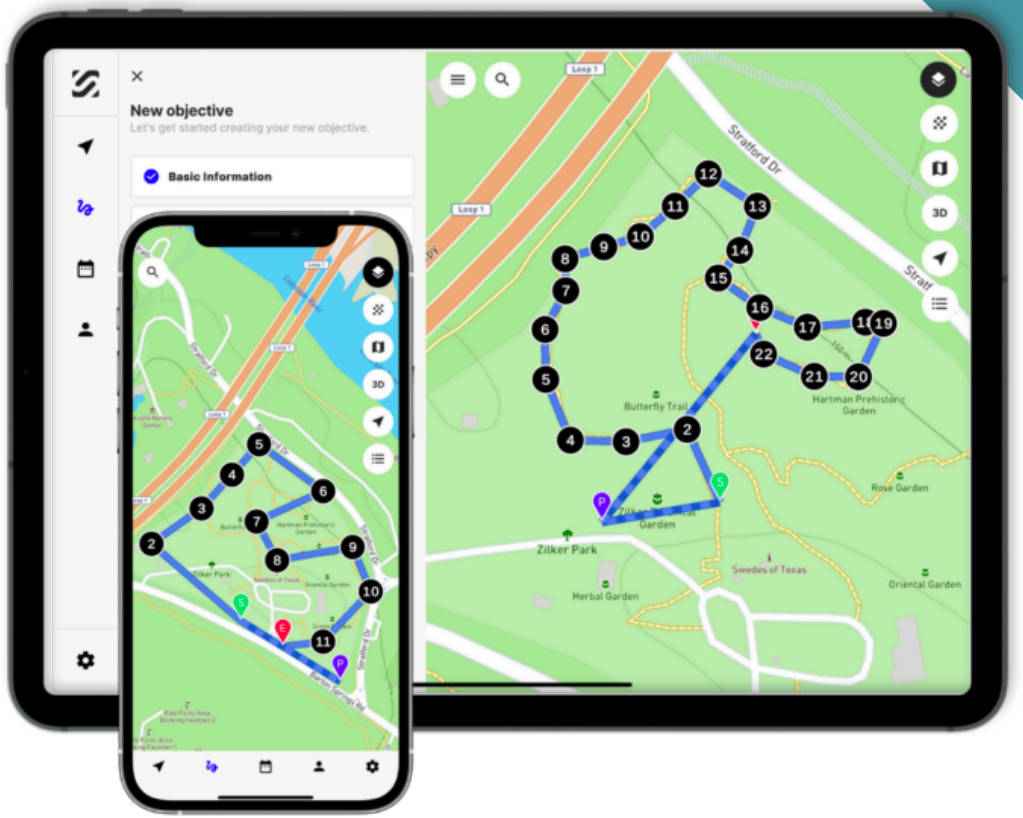

Team Member Details

Team Leader Name: **Ishaan Shrikant Kulkarni**

Branch Btech | Stream CSE: | Year: IV

Team Member 1 Name: **Siddhanth Singh**

Branch Btech | Stream MAC | Year: IV

Team Member 2 Name: **Aastik Chaudhary**

Branch Btech | Stream CSE | Year: IV

Team Member 3 Name: **Tushar Moudgil**

Branch Btech | Stream CSE | Year: IV

Team Member 4 Name: **Anjali Sharma**

Branch B.Des | Stream Design | Year: IV

Team Member 5 Name: **Anchal Kumar**

Branch B.tech | Stream CSE | Year: IV

Team Mentor 1 Name: Type Your Name Here

Category (Academic/Industry): | Expertise (AI/ML/Blockchain etc): | Domain Experience (in years):

Team Mentor 2 Name: Type Your Name Here

Category (Academic/Industry): | Expertise (AI/ML/Blockchain etc): | Domain Experience (in years):