UIC CODE 713

1st edition, November 2004

Translation

R

Design of monoblock concrete sleepers

Conception des traverses monoblocs en béton
Bemessung von Monoblockschwellen aus Beton

UNION INTERNATIONALE DES CHEMINS DE FER
INTERNATIONALER EISENBAHNVERBAND
INTERNATIONAL UNION OF RAILWAYS

Leaflet to be classified in Volume:

VII - Way and Works

Application:

With effect from 1 November 2004
All members of the International Union of Railways

Record of updates

1st edition, November 2004	Creation of the leaflet to support European Standards EN 13230 and EN 13146

The person responsible for this leaflet is named in the UIC Code

Contents

Summary **1**

1 - General **2**

1.1 - Scope 2

1.2 - Definitions 3

2 - Design criteria **4**

2.1 - Service categories for sleeper designs 4

2.2 - Design life and warranty 4

2.3 - Design loading 5

2.4 - Dimensions and mass 13

2.5 - Requirements of the sleeper materials 13

2.6 - Fastening systems 14

2.7 - Electrical insulation 14

2.8 - Other design requirements 14

3 - Description of production systems **16**

Appendix A - Example calculations of design bending moment **20**

A.1 - Case 1 - Rectangular base sleeper and low-attenuation rail pad 20

A.2 - Case 2 - Narrow centre section sleeper and high-attenuation rail pad 21

A.3 - Calculation of design bending moment, 2,5 m long constant width sleepers 23

A.4 - Calculation of design bending moment, 2,6 m long waisted sleepers 24

Bibliography **25**

Summary

This document gives the requirements for design of prestressed monoblock concrete sleepers. The primary application is for main-line, standard-gauge (1 435 mm) railways with speeds of up to 300 km/h or axle loads up to 300 kN, but the principles may be valid for other applications. A "standard" design may be considered to be suitable for freight trains of up to 250 kN axle load with 120 km/h maximum speed and passenger trains of up to 180 kN axle load with 300 km/h maximum speed.

This document is intended to support but not replace European Standards on this subject, in particular:

- EN 13230 - Concrete sleepers and bearers (May 2002),

- EN 13146 - Fastening systems (May 2002).

This document represents a State of the Art, at the date of publication, as determined by a UIC expert group and should not be a barrier to further development.

1 - General

1.1 - Scope

This document provides particular design guidance in the following areas:

- service categories for sleeper designs,
- derivation of design loads including dynamic impact factors,
- calculation of design bending moments,
- selection of dimensions.

Advisory information is also provided on current methods of manufacture.

This design guidance is considered to be appropriate in the following fields of application:

- with elastic fastenings,
- on good subsoil,
- with a minimum of 250 mm depth of ballast,
- where there is adequate drainage of ballast and subsoil,
- where there are no mechanical rail joints except glued insulated joints (continuously welded rail),
- where mechanised maintenance is employed.

In circumstances where the above cannot be ensured, a reduced sleeper life and/or additional maintenance may be expected, or the design should be enhanced.

1.2 - Definitions

Q_0	Static axle load of trains
P_d	Design rail-seat load (normal service dynamic loading)
M_{dr+}	Design positive (sagging) bending moment at rail-seat (normal service dynamic loading)
M_{dr-}	Design negative (hogging) bending moment at rail-seat (normal service dynamic loading)
M_{dc-}	Design negative (hogging) bending moment at sleeper centre (normal service dynamic loading)
M_{dc+}	Design positive (sagging) bending moment at sleeper centre (normal service dynamic loading)
γ_p	Factor to apply to dynamic increment to reflect rail-pad attenuation
γ_v	Normal service dynamic increment determining the effect of speed
γ_d	Factor to allow for load distribution between sleepers
γ_r	Partial factor to allow for variation in the sleeper reaction due to support faults
γ_i	Partial factor to allow for irregularity in the longitudinal support of the sleeper
k_1	Impact factor representing exceptional load case
k_2	Impact factor representing accidental load case
I_c	Second moment of area at sleeper centre section
I_r	Second moment of area at rail-seat section

2 - Design criteria

Design criteria to be taken into account for the design of monoblock concrete sleepers are described below.

2.1 - Service categories for sleeper designs

Where the service loading is different, this theoretically permits a different sleeper design. Economies exist where the sleeper is designed specifically for the application, but this is offset against increased manufacture, stocking and management costs.

The following circumstances may lead to a requirement for different design criteria:

- different axle-load or speed categories of line,
- different constraints (e.g. low depth requirement),
- different service load (e.g. curves, on ballasted bridges),
- different track requirements (e.g. expansion joints, etc.).

It is recommended that designs with baseplates should be avoided wherever possible. Where it is necessary to employ these, the basic sleeper design should normally be the same as for direct fastening.

Standardisation of sleeper designs will lead to greater volume and therefore minimum unit cost of production. Decisions on the number of sleeper designs should therefore be guided by economic criteria, taking into account the unit cost of production at the relevant volume levels.

2.2 - Design life and warranty

The sleeper shall be designed for a minimum service life of 40 years. The criteria presented in this document are considered to be consistent with that objective.

The components shall be warranted against defects in materials or manufacture for a minimum period of 5 years. The warranty shall also cover the areas of the design that are the responsibility of the manufacturer. The manufacturer may also propose more stringent design requirements to those presented in this document, for the purposes of providing the warranty.

2.3 - Design loading

Derivation of design loading for concrete sleepers shall take account of:

- the design static axle load of trains,
- dynamic factors, to take account of geometric irregularities in the track structure and vehicles,
- the influence of the track structure in sharing applied axle loads between sleepers and the variability of the track support.

Several load cases may need to be evaluated to determine the worst combination of static and (speed-related) dynamic load.

A "standard" sleeper may be considered as satisfying the load/speed cases shown below:

Axle load/Speed	180 kN	225 kN	250 kN
120 km/h	X	X	X
200 km/h	X	X	
300 km/h	X		

Design based upon assumption of symmetric vertical loading is, in most cases, acceptable, as sufficient factors are included to take account of lateral loading and load transfer on curves. In special circumstances, the purchaser may refine the design to take account of these effects.

Design bending moments in the sleeper are to be derived to account for the following cases:

1. The basic design bending moment, which takes account of static loading plus normal service dynamic loads. No cracking of the sleeper shall occur at this load level.
2. An exceptional load bending moment, which takes account of loads in addition to those in paragraph 1., that are to be expected only a few times in the life of the concrete element (e.g. wheelflats). Any crack formed at this load level shall close on removal of the load.
3. A bending moment relating to accident impact loads. This shall define the ultimate load capacity of the concrete element.

2.3.1 - Static vertical load

The static component of vertical design load (Q_0) can be determined directly from the static axle load of trains (normally the sleeper design load will be expressed per wheel). At the design stage it should be borne in mind that sleepers are expected to last for 40 years or more. If future enhancements to axle load and speed are planned, this may be taken into account in the design.

2.3.2 - Normal service dynamic increment

This accounts (γ_v) for normal dynamic loading resulting from irregularities in the track structure and vehicles. Recommended values are shown below:

- for V < 200 km/h: 0,50,
- for V ≥ 200 km/h: 0,75.

In special circumstances the dynamic factor may be derived from proven empirical relationship, measurement or simulation and may depend on track geometric quality and speed. For speeds up to 200 km/h, the recommended factor is consistent with Standard *EN 13230* (see Bibliography - page 25). For speeds up to 300 km/h, it is considered that the same factor remains, provided that the necessary geometric tolerances in rail surface and geometric alignment associated with those speeds are maintained. The experience shows that the factor does not increase up to a speed of 300 km/h.

2.3.3 - Resilient rail pads

European Standard *EN 13146* (see Bibliography - page 25) evaluates the impact attenuation of fastening systems (γ_p) by means of a test to measure the magnitude of impact bending strains in a concrete sleeper. Fastening systems, with their associated rail pads, can be classified according to the reduction of strain to a reference case as follows:

- low attenuation < 15%
- medium attenuation > 15 - 30%
- high attenuation > 30%

These impact-attenuation factors may be applied to design loads. However, it is recommended that the attenuation value measured for the fastening system be reduced by 25% in the normal case to allow for the service condition. This reduction is to apply to exceptional, accidental and normal cases. In order to take advantage of the reductions that may be made in the design load by accounting for the use of resilient rail pads, the purchaser will need to ensure that maintenance standards allow the continued use of rail pads equivalent to or better than those assumed in the design.

Thus dynamic increment factors are to apply as follows:

- low attenuation < 15 % 1,0
- medium attenuation > 15 - 30 % 0,89
- high attenuation > 30 % 0,78

This is used with the normal-service dynamic-load increment to produce a combined dynamic factor, e.g. combined dynamic factor to apply with high-attenuation fastenings at V = 250 km/h:

$$= 1 + 0{,}78 \times 0{,}75 = 1{,}59$$

Use of the rail-pad attenuation values to reduce the dynamic impact factor in this way is probably conservative, as there is also likely to be an additional benefit in static load distribution.

2.3.4 - Exceptional service dynamic load factors

The recommended factors representing the impact factors to apply in the exceptional (k_1) and accidental (k_2) cases are as follows:

- impact factor representing exceptional load case $k_1 = 1,8$
- impact factor representing accidental load case $k_2 = 2,5$

For consistency with Standard *EN 13230* , these factors are to apply when the strength of the sleeper is to be proven by static test; for the dynamic test, the following factors are recommended:

- impact factor representing exceptional load case $k_1 = 1,5$
- impact factor representing accidental load case $k_2 = 2,2$

2.3.5 - Sharing of load between sleepers

When considered longitudinally in the track, an individual sleeper will only take a proportion of the wheel load as some will be shared with adjacent sleepers.

It is recommended that a constant factor (γ_d) of 0,5 be used for normal cases (subject to additional partial factors below). This value can be considered valid for rails $\geq$ 46 kg/m and sleeper spacing $\leq$ 65 cm with typical formation conditions. The purchaser shall have the option to derive an alternative value if the circumstances require it. In such circumstances a reaction factor may be derived by means of established theory (e.g. Winkler beam on elastic foundation).

2.3.6 - Additional partial factors

Two further factors are recommended by Standard *EN 13230*, which also derive from ERRI research studies: ORE D 71/RP 9, D 170/RP 1 and D 170/RP 4 (see Bibliography - page 25):

- a factor (γ_r) representing variation in the sleeper reaction in the ballast due to support faults, having a typical value of 1,35,

- a factor (γ_i) representing dynamic increment of bending moment due to irregularities in the longitudinal support of the sleeper, having a typical value of 1,6.

2.3.7 - Lateral load

This will not normally be incorporated into a standard sleeper design as sufficient allowance is made in the design loads to allow for these effects. At the discretion of the purchaser, additional allowance may be made to account for these effects, for example:

- curving loads due to cant deficiency,

- dynamic lateral loads,

- wind loads.

However, these loads are only employed to calculate an enhanced vertical load due to load transfer (i.e. producing asymmetric vertical loading and bending moment diagram).

2.3.8 - Longitudinal load

Longitudinal loads from traction or braking are not considered to influence the sleeper design.

2.3.9 - Design rail-seat load

The design rail-seat load, used to derive the basic design bending moment, can therefore be calculated according to Equation [1]:

$$P_d = \frac{Q_0}{2}(1 + \gamma_p \cdot \gamma_v) \cdot \gamma_d \cdot \gamma_r \qquad [1]$$

2.3.10 - Design bending moment

Basic value exclusive of exceptional load factors k_1 and k_2

Analysis and design of the structural strength of the concrete sleeper are in all cases based upon derivation of bending moments at rail-seat section and at sleeper centre. There are many cases (including asymmetric) of load reactions. The derived bending moments are very sensitive to the reaction distribution. Typical load and reaction models employed are shown in Fig. 1. The acceptable variant to these is the asymmetric case described above.

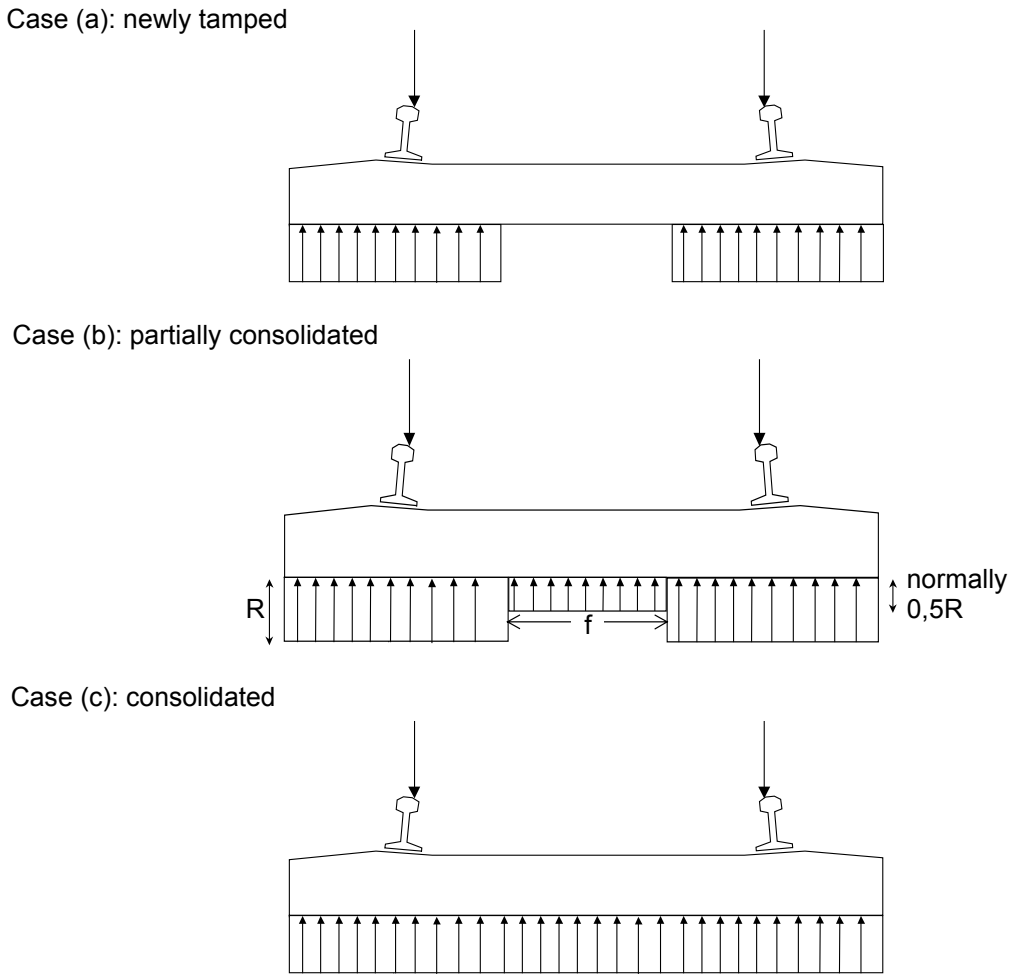

Fig. 1 - Sleeper reaction cases

Design positive bending moment at the rail-seat is derived from load case (a), where the reaction extends to the sleeper end at equal distance either side of the rail-seat centre line. This load and reaction case may be analysed on the assumption of effective load distribution and effective lever arm defined by Fig. 2 and Equation [2] - page 10.

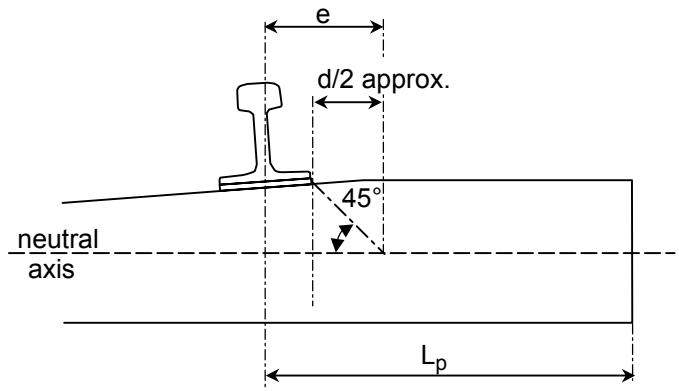

Fig. 2 - Assumed load distribution and lever arm derivation for rail-seat bending

$$\lambda = \frac{L_p - e}{2} \qquad [2]$$

where: λ = effective lever arm

L_p = distance between the rail-seat axis and the end of the sleeper

d = depth of the sleeper at the rail-seat

e = width of the load distribution, derived from the rail-seat width, the sleeper depth and the assumed distribution angle of 45°. For UIC 60 (60E1) rail, e = 0,15/2+d/2 approximately.

The bending moment may then be derived directly according to Equation [3]:

$$M_{dr+} = \gamma_i \cdot P_d \lambda / 2 \qquad [3]$$

In some railways, the purchaser defines rail-seat loads and corresponding design bending moment higher than those which would be derived from Equations [1] - page 8 and [3]. In these cases, lower values of k_1 and k_2 are typically used.

For derivation of the design negative-bending moment at sleeper centre, the following are recommended current practice:

- case (b), with a reduction factor in the centre section of 50%, for sleepers with rectangular base,
- case (c), with correct accounting for the reaction distribution on the sleeper base, for waisted sleepers.

Case (c), or case (b) with modified parameters, may be specified by purchaser, in which case the purchaser shall specify the magnitude of reduction of reaction in the sleeper centre section and the length over which it is to apply.

Design bending moment may be evaluated according to moment analysis of the reaction distribution. For the standard case of uniform load distribution with a 50% reduction in the centre section, design negative-bending moment at sleeper centre may be calculated according to Equation [4.1].

$$M_{dc-} = \gamma_i \cdot P_d \cdot \left(\frac{c}{2} - \frac{2 \cdot L^2 - f^2}{4 \cdot (2 \cdot L - f)}\right) \qquad [4.1]$$

where: c = rail-seat centre spacing

L = sleeper length

f = length of centre zone of reduced reaction (see Fig. 1 - page 9, case (b))

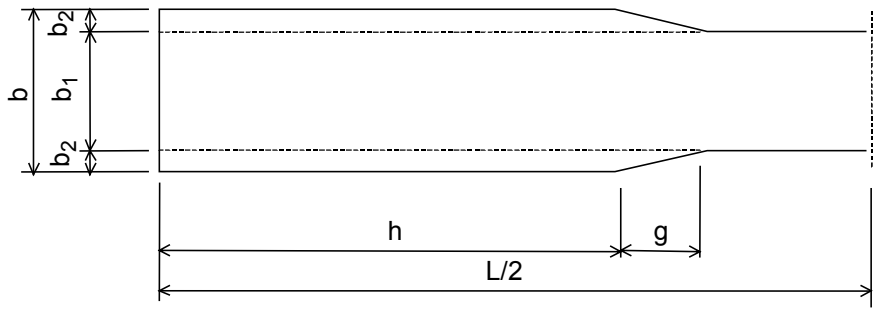

Fig. 3 - Geometry of waisted sleeper

For a waisted sleeper of normal geometry (Fig. 3), Equation [4.2] is used:

$$M_{dc-} = \gamma_i \cdot P_d \cdot \left(\frac{c}{2} - \frac{L}{2} + \frac{b_1 \cdot L^2/8 + b_2(h^2 + g \cdot h + g^2/3)}{b_1 \cdot L/2 + b_2(2h + g)}\right) \qquad [4.2]$$

where: c = rail-seat centre spacing

L = sleeper length

b_1 = width of waisted section of sleeper

b_2 = additional width at each side of rail-seat section of sleeper

h = length of wide section at sleeper end

g = length of tapering section

As alternative deriving the design bending moment in the sleeper centre, an empirical relationship exists based upon the moments of inertia of the relative cross sections, as shown in Equation [4.3]. This equation may be preferred for a waisted or a rectangular sleeper at the discretion of the purchaser:

$$M_{dc-} = 1{,}2 \times M_{dr+} \times \frac{I_c}{I_r} \qquad [4.3]$$

Railways have experienced sleeper failure due to bending cracking at the upper surface of the rail-seat or (less often) at the base of the sleeper centre, and have introduced a bending moment requirement to resist this. The cause of this reverse bending effect is considered to be dynamic excitation of the sleeper (i.e. rebound effect in the event of dynamic impact). The design magnitude of resistance moments for these cases are derived from test results and it is therefore recommended that design reverse bending moments be specified at the rail-seat and at the sleeper centre in accordance with the following relationships, derived from measurement and calculation:

- for the rail-seat:

$$M_{dr-} = 0,5 \times M_{dr+} \qquad [5]$$

- for the sleeper centre:

$$M_{dc+} = 0,7 \times M_{dc-} \qquad [6]$$

2.3.11 - Additional load cases

In situations where frozen ballast may lead to a much stiffer track bed for a significant period, the sharing of load between sleepers may be modified as well as the sleeper reaction and dynamic impact forces. Similarly the loading environment during track laying and commissioning may need to be considered. Where these circumstances exist, the purchaser shall specify the additional or varied load cases to be considered.

2.3.12 - Minimum tensile strength of concrete

For the concrete strength quoted below, a permissible concrete strength of 3 MPa is the recommended value to be taken for design of the normal load case without cracking.

2.4 - Dimensions and mass

For standard designs for standard-gauge track, the following dimensional parameters are recommended. These are intended to achieve the requirements of reducing ballast pressure to an acceptable minimum and providing adequate lateral resistance to movement:

-	Length	2 500 or 2 600 mm for standard length sleeper. Other lengths may be accepted in special circumstances (platforms, narrow embankments, etc.). A design method has to be specially defined for these cases.
-	Width	300 mm max. around 160 mm min. at rail seat
-	Base area	6 000 cm^2 min. for 2,5 m length 7 000 cm^2 min. for 2,6 m length
-	Depth	200 - 230 mm preferred depth at rail seat

Too acute an angle between the sleeper sides and base should also be avoided to minimise risk of spalling and maintenance damage along this edge.

2.4.1 - Tolerances

Tolerances are to be in accordance with Standard *EN 13230*. This covers tolerances on the dimensions, fastening location, rail-seat inclination and twist, and requirements for minimum concrete cover.

2.4.2 - Lateral resistance and mass

No specific requirements are issued to provide the necessary lateral resistance. In accordance with Standard *EN 13230*, the base of the sleeper shall be left rough. The ends of the sleeper shall also be near vertical and not excessively tapered to provide good resistance at the ballast shoulder.

The recommended minimum mass for a standard sleeper is 240 kg in order to minimize uplift and risk of track buckling.

2.4.3 - Surface finish

The requirements are primarily that the rail-seat area shall be free of significant voids. Some small voids may be permitted over the rest of the sleeper surfaces. These requirements are also stated in Standard *EN 13230*.

2.5 - Requirements of the sleeper materials

These are generally comprehensively covered by Standard *EN 13230*. Specific items are summarised below.

2.5.1 - Concrete strength

Recommended concrete strength is to be Class C50/60 MPa; class C45/55 MPa is acceptable.

2.5.2 - Alkali aggregate reaction and delayed ettringite formation

In accordance with Standard *EN 13230*.

2.5.3 - Aggregate durability

The purchaser may optionally request that the durability of the concrete and/or aggregate alone be demonstrated in the following areas:

- abrasion,
- freeze-thaw resistance,
- water absorption.

Test arrangements and acceptance requirements are presented in Standard *EN 13230*.

2.5.4 - Prestressing tendons

These shall meet the requirements of Standards *EN 10138* (see Bibliography - page 25) (for the tendons) and *EN 13230*.

2.6 - Fastening systems

The sleeper design shall be compatible with the purchaser's specified fastening system in terms of the integrity of the sleeper and security of cast in fastening components, according to Standard *EN 13146*. The design life of the components of the fastening system that are integral to the sleeper shall also meet these requirements.

Where a fastening system requires a cast in component, the sleeper is required to provide a pull-out resistance to be agreed between supplier and purchaser, with a value of 60 kN minimum. The purchaser may request a test to demonstrate that this requirement is met.

2.7 - Electrical insulation

Satisfactory electrical resistance of the combined sleeper and fastening system is to be demonstrated in accordance with Standard *EN 13146*.

2.8 - Other design requirements

2.8.1 - Environmental

Particular requirements for severe environment comprise:

- optional assessment of design loads under frozen-ballast conditions (see above),
- requirements for concrete and components may be in a severe environment classification (these cases catered for in Standard *EN 13230*).

2.8.2 - Recycling

It is desirable that the manufacturer provides facilities for the receipt and recycling of used sleepers. As a minimum, the manufacturer shall provide information concerning the content of the component and provide guidance on recycling procedures.

2.8.3 - Stocking

Generally, it is permissible to use the sleeper two days after completion of the manufacturing process. In the case of extreme climatic conditions, the curing procedure must be appropriately adapted and the stocking period will be longer.

The stacking height of stock sleepers shall be taken into account by the manufacturer. The height of stacking shall be consistent with the expected strength of the concrete at the time of stacking and the support arrangement applied during stacking. If stacking loads exist on captive rail pads, these should not exceed the design toe load of the pad as specified by the manufacturer and the load should be spread over the normal rail-seat area.

Details and justification of the stacking arrangements, with design calculations where necessary, shall be held in the manufacturer's quality control documentation.

2.8.4 - Quality control

Sleeper manufacturers are required to operate an approved quality-control system, requirements of which are described in Standard *EN 13230*. Permanent marking of sleepers for traceability shall also be carried out and shall comprise, as a minimum:

- year of manufacture,
- mould identification,
- identification mark of production plant.

The purchaser may also request additional information such as the sleeper type and exact date of manufacture, which shall be traceable through the manufacturer's quality-control system.

3 - Description of production systems

The following provides a brief description of the main systems employed for producing prestressed concrete monoblock sleepers. It is an attempt to classify the various systems used world-wide today. Other systems exist, and/or being developed in an ongoing process to compete in the market and minimise costs as well as upgrade quality.

In order to optimise the utilisation of the raw materials, i.e. concrete and steel, the monoblock sleepers are produced as prestressed elements. The concrete material can absorb quite high compressive stress but only about 10% of the same value in tension. By tensioning the steel tendons, and anchoring these in the sleeper, a compressive force is transferred to the concrete, which permits the composite element to withstand higher tensile stresses.

There are two basic methods to achieve prestressed concrete elements: by **pre-tensioning** or **post-tensioning**. This means the steel tendons are tensioned (stressed) before or after the concrete is cast.

The **pre-tensioned** method has developed into three basic systems:

1. **Long line systems** = more than 8 sleepers in length

2. **Short line systems** = 2 to 8 sleepers in length

3. **Single mould systems** = 1 sleeper in length

Post-tensioned sleepers are normally produced in single moulds.

All these systems utilise high quality standard material available all over the world, at prices that make the product very competitive, even when compared to a sleeper material like timber. This is particularly true in countries where timber is supplied at a premium.

The minimum concrete quality used is C 45/55. Most prestressing steel used is normally of a high tensile strength, low relaxation type.

All systems require different investment levels and labour inputs. This means that the competition depends mainly on the time (or policy) for depreciation and labour-cost level. Also the required starting-up time and maximum capacity will have effects on the cost/price calculation. The possibility to move the plant or part thereof and re-use it for another customer or another part of the same railway can play an important role when judging the depreciation.

In the following, the various sleeper systems are described in the order of most frequent occurrence.

3.1 - Long line systems employ normally a long row of moulds to produce more than 30 sleepers in length and up to 8 sleepers in width. In most plants a number of such rows are needed for the required daily output since the moulds are normally used only once each 24-hour cycle. The systems utilise standard high-grade steel tendons (in many cases indented single or stranded wires) and wet concrete consistency. The tendons are stressed simultaneously between end anchor heads. After the concrete reaches the specified strength the tendons are anchored in the concrete only by means of the inherent bond between the two materials.

The systems are generally most economic for long-term production of standard products at constant rates (same amount of sleepers produced per shift). Change of the sleeper design and/or fastening system or moving the plant usually require a significant capital expenditure.

3.1.1 - The prestress-after-demoulding system is normally based on moulds with 4 cavities side by side. The mould packages are placed 30 to 60 in a continuous row on a long bed. The moulds can be moved vertically and locked in two positions. Currently all sleepers are cast in continuous beams and the joints between each mould have been designed to make an indentation for later cutting through the steel and concrete section. The production process is as follows:

1. The steel tendons are pulled out over the bed and stressed, with the moulds in the lower position.

2. The moulds are then lifted and filled with concrete and vibrated in the upper position.

3. After curing, the moulds are dropped and the sleepers are thus demoulded.

4. The pre-stressing force can then be transferred to the sleepers.

5. The long sleeper beams are cut into individual components by diamond disc saw or by other means.

6. The sleepers are turned right-side up, checked and dispatched to stack or customer.

3.1.2 - The prestress-before-demoulding system normally employs mould packages 6 to 8 units wide and placed in a row of 30 to 60. Production proceeds as follows:

1. The pre-stressing and casting is carried out in a manner similar to point 3.1.1.

2. When the concrete is cured to the required strength, the prestress is transferred while the sleepers are still in the moulds.

3. The sleepers are lifted out of the mould.

3.2 - Short-line systems are normally based on a configuration of 2 to 6 sleeper mould cavities in length and 1 to 4 in width and are built into rigid prestressing frames. The systems utilise standard steel tendons (normally single wires) and dry concrete consistency. The sleepers are produced in a carousel system including stations for preparing, stressing of tendons in each frame, casting with vibration, curing in curing chambers and demoulding, after which the concrete is cured to the required strength. The tendons are anchored in the concrete by means of the inherent bond between the two concrete and steel.

3.2.1 - The released-in-the-moulds system is based on a handling system that carries the frame including its fixed moulds from station to station. This method proceeds as follows:

1. Preparation and stressing of the steel tendons in the frame.

2. Filling and vibrating the concrete.

3. Curing in chambers.

4. Release, turning and emptying of the moulds.

5. Cutting the tendons and final checking before dispatch.

3.2.2 - The instant-demoulding-short-line system combines the moveable prestress frame with instant demoulding. The systems utilise standard steel tendons (single wires) and dry concrete consistency. This method proceeds as follows:

1. The steel tendons are placed (some diagonally) and stressed in the frames and the frame is connected to the mould package.

2. The combined package is brought to the casting station and the moulds are filled with concrete and vibrated thoroughly.

3. A pallet is connected on top of the mould and the combined package is turned upside down.

4. The mould part is then removed (leaving the sleepers on the pallet) and brought back to start the casting cycle (see paragraph 1. above).

5. The sleepers and the prestressing frames on the pallets are moved to a curing chamber, with the prestressing force still anchored by the frames and not transferred to the sleepers.

6. After curing, the prestress is released and the sleepers are cut free and taken from the pallet to the yard. The frame and pallet go back into the next cycle (see paragraph 1. above).

3.3 - The single-mould system produces one cast at a time in a single or double mould in a carousel, with stations for preparing (including prestress), casting, curing (in chambers) and demoulding. The system utilises standard steel material (single wires) and dry concrete consistency. Some systems require special end anchoring detail to complete the anchoring. This is often required when a few plain rods are used as tendons.

3.3.1 - Single sleepers hardening in the moulds. The characteristic of this system is that the tendons are prepared in bundles individually for each sleeper. The production is carried out in single or double moulds, rigid enough to carry the prestressing load. The moulds are travelling in a carousel or similar system with the following sequence:

1. The prestressing tendons are prepared, cut, washers are placed and the tendon ends are riveted.

2. The group of tendons is stressed and anchored to the end of each single sleeper mould.

3. The mould is filled with concrete, vibrated and moved into a curing chamber.

4. Thereafter the tendon anchors are released.

5. The sleeper is demoulded, checked and dispatched to stack or to the customer.

6. The mould goes back to start the cycle again.

3.3.2 - Single sleepers instant-demoulded. This system combines the instant-demoulding system (see point 3.4 - page 19) with the tendons pre-tensioned in a frame (see point 3.2.2 - page 18). The production cycles are as follows:

1. The tendons are stressed and anchored in special single steel frames.

2. The frame is connected to a single sleeper mould shell.

3. The mould is filled with concrete and vibrated.

4. A pallet is placed on top of the mould (bottom of the sleeper) and connected.

5. The whole package is turned upside down.

6. The sleeper mould shell is lifted off and thereby the sleeper is demoulded.

7. The sleeper and the prestressing frame are moved to the curing chamber.

8. The prestress is released and the frame goes back to start the cycle again (see paragraph 1. above).

9. The sleeper is taken out to store and the pallet goes back to start the cycle again (see paragraph 4. above).

3.4 - Post-tensioned instant-demoulded sleepers. This system utilises threaded plain single bars shaped as hair-pins with washers and nuts, and dry concrete consistency. The production process is as follows:

1. The sleepers are cast in single or twin moulds with mould parts to form ducts for later installation of the special hair-pin steel bars.

2. The moulds are filled and vibrated. The sleepers are instant-demoulded (egg-laying machine or carousel) and cured to a concrete compressive strength of 45 N/mm^2 (150 mm cubes) minimum.

3. The bars are installed, simultaneously stressed and anchored by tightening the nuts.

4. The channels are thereafter injected with cement mortar to protect the bars from rust and also achieve some bonding. The end openings to the channels are patched with dry concrete.

Appendix A - Example calculations of design bending moment

A.1 - Case 1 - Rectangular base sleeper and low-attenuation rail pad

Consider the design of a standard sleeper, 2,5 m long, with recommended factors:

Sleeper length = 2,50 m

Sleeper depth (rail seat) = 0,21 m

Rail-seat centre spacing = 1,50 m

Consider design loads, dynamic and partial factors for three standard load cases and using Equation [1] - page 8:

$$P_d = \frac{Q_0}{2}(1 + \gamma_p \cdot \gamma_v) \cdot \gamma_d \cdot \gamma_r$$

Axle Load kN	Speed km/h	Pad Factor γ_p	Speed Increment γ_v	Distribution Factor γ_d	P. factor Reaction γ_r	P. factor Irregularity γ_i	Design Load kN
250	120	1,0	0,50	0,5	1,35	1,6	127
225	200	1,0	0,75	0,5	1,35	1,6	133
180	300	1,0	0,75	0,5	1,35	1,6	106

For the design moment at the rail seat, Equation [2] relating to Fig. 2 - page 10 is used.

where: L_p = 0,5 m

e = 0,075 + 0,21/2 = 0,180 m

hence : λ = (0,5 - 0,18)/2 = 0,160 m

and M_{dr+} = 1,6 x 133 x 0,16/2 = 17,0 kN.m from Equation [3] - page 10

and M_{dr-} = 0,5 x M_{dr+} = 8,5 kN.m from Equation [5] - page 12

For the centre section, reaction case (b) will be employed. The bending moment in this case is given by Equation [4.1] - page 11:

$$M_{dc-} = \gamma_i \cdot P_d \cdot \left(\frac{c}{2} - \frac{2 \cdot L^2 - f^2}{4 \cdot (2 \cdot L - f)}\right)$$

where: c = rail-seat centre spacing = 1,5 m

L = sleeper length = 2,5 m

f = length of centre zone of reduced reaction = 0,5 m

which gives $M_{dc-} = 14{,}18$ kN.m

and $M_{dc+} = 0{,}7 \times M_{dc-} = 10{,}3$ kN.m from Equation [6] - page 12.

A.2 - Case 2 - Narrow centre section sleeper and high-attenuation rail pad

Consider the design of a standard sleeper, 2,6 m long, with recommended factors and a centre section reduced to 80% of normal width:

Sleeper length = 2,60 m

Sleeper depth (rail seat) = 0,21 m

Rail-seat centre spacing = 1,50 m

Consider design loads, dynamic and partial factors for three standard load cases and using Equation [1] - page 8 formula:

$$P_d = \frac{Q_0}{2}(1 + \gamma_p \cdot \gamma_v) \cdot \gamma_d \cdot \gamma_r$$

Axle Load kN	Speed km/h	Pad Factor γ_p	Speed Increment γ_v	Distribution Factor γ_d	P. factor Reaction γ_r	P. factor Irregularity γ_i	Design Load kN
250	120	0,78	0,50	0,5	1,35	1,6	118
225	200	0,78	0,75	0,5	1,35	1,6	**121**
180	300	0,78	0,75	0,5	1,35	1,6	96

For the design moment at the rail seat, the Equation [2] relating to Fig. 2 - page 10 is used.

where: L_p = 0,55 m

e = 0,075 + 0,21/2 = 0,180 m

hence: λ = (0,55 - 0,18)/2 = 0,185 m

and M_{dr+} = 1,6 x 121 x 0,185/2 = 17,8 kN.m from Equation [3] - page 10

and M_{dr-} = 0,5 x M_{dr+} = 8,9 kN.m from Equation [5] - page 12

For the centre section, reaction case (c) will be employed, with reaction proportional to the width of the sleeper base, for which the bending moment is given by Equation [4.2] - page 11:

$$M_{dc-} = \gamma_i \cdot P_d \cdot \left(\frac{c}{2} - \frac{L}{2} + \frac{b_1 \cdot L^2/8 + b_2(h^2 + g \cdot h + g^2/3)}{b_1 \cdot L/2 + b_2(2h + g)} \right)$$

where:	c	=	rail-seat centre spacing	=	1,5 m
	L	=	sleeper length	=	2,6 m
	b_1	=	width of waisted section of sleeper	=	0,24 m
	b_2	=	additional width at each side of rail-seat section of sleeper	=	0,03 m
	h	=	length of wide section at sleeper end	=	1,00 m
	g	=	length of tapering section	=	0,10 m

which gives $M_{dc-} = 15{,}2$ kN.m

and $M_{dc+} = 0{,}7 \times M_{dc-} = 10{,}7$ kN.m from Equation [6] - page 12.

Consider centre moments derived in accordance with using ratios of moments of inertia, described by equation [4.3] - page 12 and using a typical value of $I_c/I_r = 0{,}55$.

$$M_{dc-} = 1{,}2 \times M_{dr+} \times \frac{I_c}{I_r}$$

which gives $M_{dc-} = 11{,}8$ kN.m

and $M_{dc+} = 0{,}7 \times M_{dc-} = 8{,}2$ kN.m from Equation [6].

These examples and other variants are shown in tabular form below:

A.3 - Calculation of design bending moment, 2,5 m long constant width sleepers

		2,5 m long sleeper, soft pad			2,5 m long sleeper, hard pad		
		freight	**h/s std**	**"TGV"**	**freight**	**h/s std**	**"TGV"**
Static axle load	(kN)	250	225	180	250	225	180
Corresponding speed	(km/h)	120	200	300	120	200	300
Assumed rail-foot width	(m)	0,15	0,15	0,15	0,15	0,15	0,15
Sleeper length	(m)	2,50	2,50	2,50	2,50	2,50	2,50
Rail-seat centres	(m)	1,50	1,50	1,50	1,50	1,50	1,50
Depth at rail seat	(m)	0,21	0,21	0,21	0,21	0,21	0,21
Lambda value =	**(m)**	**0,160**	**0,160**	**0,160**	**0,160**	**0,160**	**0,160**
Centre-zone length	(m)	0,5	0,5	0,50	0,5	0,5	0,50
Pad factor = 0,78 - 1,00		0,78	0,78	0,78	1,00	1,00	1,00
Speed increment		0,50	0,75	0,75	0,50	0,75	0,75
Speed factor =		**1,39**	**1,59**	**1,59**	**1,50**	**1,75**	**1,75**
Distribution factor [a]		0,50	0,50	0,50	0,50	0,50	0,50
Support-fault factor		1,35	1,35	1,35	1,35	1,35	1,35
Total multiplier =		**0,94**	**1,07**	**1,07**	**1,50**	**1,75**	**1,75**
Rail-seat load P_d =	**(kN)**	**118**	**121**	**96**	**127**	**133**	**106**
Irregularity factor		1,60	1,60	1,60	1,60	1,60	1,60
M_{dr+}	**(kNm)**	**15,0**	**15,4**	**12,3**	**16,2**	**17,0**	**13,6**
$M_{dr-} = (0{,}5 \times M_{dr+})$	**(kNm)**	**-7,5**	**-7,7**	**-6,2**	**-8,1**	**-8,5**	**-6,8**
$M_{dc-(\text{case b})}$	**(kNm)**	**-13,0**	**-13,4**	**-10,7**	**-14,1**	**-14,8**	**-11,8**
$M_{dc+} = (0{,}7 \times M_{dc-})$	**(kNm)**	**9,1**	**9,4**	**7,5**	**9,8**	**10,3**	**8,3**

a. for sleeper c/c < 65 cm, rail weight > 46 kg/m.

A.4 - Calculation of design bending moment, 2,6 m long waisted sleepers

		2,5 m long sleeper, soft pad			2,5 m long sleeper, hard pad		
		freight	**h/s std**	**"TGV"**	**freight**	**h/s std**	**"TGV"**
Static axle load	(kN)	250	225	180	250	225	180
Corresponding speed	(km/h)	120	200	300	120	200	300
Assumed rail-foot width	(m)	0,15	0,15	0,15	0,15	0,15	0,15
Sleeper length	(m)	2,60	2,60	2,60	2,60	2,60	2,60
Rail-seat centres	(m)	1,50	1,50	1,50	1,50	1,50	1,50
Depth at rail seat	(m)	0,21	0,21	0,21	0,21	0,21	0,21
Lambda value =	**(m)**	**0,185**	**0,185**	**0,185**	**0,185**	**0,185**	**0,185**
Pad factor = 0,78 - 1,00	(m)	0,78	0,78	0,78	1,00	1,00	1,00
Speed increment		0,50	0,75	0,75	0,50	0,75	0,75
Speed factor =		**1,39**	**1,59**	**1,59**	**1,50**	**1,75**	**1,75**
Distribution factor [a]		0,50	0,50	0,50	0,50	0,50	0,50
Support fault factor		1,35	1,35	1,35	1,35	1,35	1,35
Total multiplier =		**0,94**	**1,07**	**1,07**	**1,01**	**1,18**	**1,18**
Rail-seat load P_d =	**(kN)**	**118**	**121**	**96**	**127**	**133**	**106**
Irregularity factor		1,60	1,60	1,60	1,60	1,60	1,60
M_{dr+}	**(kNm)**	17,4	17,8	14,3	18,7	19,7	15,7
$M_{dr-} = (0{,}5 \times M_{dr+})$	**(kNm)**	-8,7	-8,9	-7,1	-9,4	-9,8	-7,9

a. for sleeper c/c < 65 cm, rail weight > 46 kg/m.

b_1	**(m)**	0,24	0,24	0,24	0,24	0,24	0,24
b_1	**(m)**	0,03	0,03	0,03	0,03	0,03	0,03
h	**(m)**	1,00	1,00	1,00	1,00	1,00	1,00
g	**(m)**	0,10	0,10	0,10	0,10	0,10	0,10
M_{dc-}	**(kNm)**	**-14,8**	**-15,2**	**-12,2**	**-16,0**	**-16,8**	**-13,4**
$M_{dc+} = (0{,}7 \times M_{dc-})$	**(kNm)**	**10,4**	**10,7**	**8,5**	**11,2**	**11,8**	**9,4**

Alternative method based on ratio of inertias

Moment of inertia I_c/I_r		0,55	0,55	0,55	0,55	0,55	0,55
$M_{dc-} = 1{,}20 \times I_c/I_r \times M_{dr+}$	**(kNm)**	**-11,5**	**-11,8**	**-9,4**	**-12,4**	**-13,0**	**-10,4**
$M_{dc+} = (0{,}7 \times M_{dc-})$	**(kNm)**	**8,0**	**8,2**	**6,6**	**8,7**	**9,1**	**7,3**

Bibliography

1. ERRI reports

Reuropean Rail Research Institute (ERRI)
ORE D 71/RP 9: Stresses in the rails, the ballast and in the formation resulting from traffic loads - Stresses in concrete sleepers, October 1969

ORE D 170/RP 1: Track component dimensions. Standardization of characteristics and acceptance tests - Current test methods and loads for fastening systems and concrete sleepers, April 1988

ORE D 170/RP 4: Track component dimensions. Standardization of characteristics and acceptance tests - Studies of different values which need to be taken into account with respect to the definition of the properties of concrete sleepers, and comparison of current testing methods. Determination of a unified test method and formulation of recommendations, April 1991

2. European standards

European Committee for Standardization (CEN)
EN 10138-1:2000 : Prestressing steels - Part 1: General requirements, October 2000

EN 10138-2:2000 : Prestressing steels - Part 2: Wire, October 2000

EN 10138-3:2000 : Prestressing steels - Part 3: Strand, October 2000

EN 10138-4:2000 : Prestressing steels - Part 4: Bars, October 2000

EN 13146-1:2003 : Railway applications. Track. Test methods for fastening systems - Part 1: determination of longitudinal rail restraint, June 2003

EN 13146-2:2003 : Railway applications. Track. Test methods for fastening systems - Part 2: determination of torsional resistance, June 2003

EN 13146-3:2003 : Railway applications. Track. Test methods for fastening systems - Part 3: determination of attenuation of impact loads, June 2003

EN 13146-4:2003 : Railway applications. Track. Test methods for fastening systems - Part 4: effect of repeated loading, June 2003

EN 13146-5:2003 : Railway applications. Track. Test methods for fastening systems - Part 5: determination of electrical resistance, June 2003

EN 13146-6:2003 : Railway applications. Track. Test methods for fastening systems - Part 6: effect of severe environmental conditions, June 2003

EN 13146-7:2003 : Railway applications. Track. Test methods for fastening systems - Part 7: determination of clamping force, June 2003

EN 13146-8:2002 : Railway applications. Track. Test methods for fastening systems - Part 8: in-service testing, December 2002

EN 13230-1:2003 : Railway applications. Track. Concrete sleepers and bearers - Part 1: general requirements, April 2003

EN 13230-2:2003 : Railway applications. Track. Concrete sleepers and bearers - Part 2: prestressed monoblock sleepers, April 2003

EN 13230-3:2003 : Railway applications. Track. Concrete sleepers and bearers - Part 3: twin-block reinforced sleepers, April 2003

EN 13230-4:2003 : Railway applications. Track. Concrete sleepers and bearers - Part 4: prestressed bearers for switches and crossings, April 2003

EN 13230-5:2003 : Railway applications. Track. Concrete sleepers and bearers - Part 5: special elements, April 2003

Warning

No part of this publication may be copied, reproduced or distributed by any means whatsoever, including electronic, except for private and individual use, without the express permission of the International Union of Railways (UIC). The same applies for translation, adaptation or transformation, arrangement or reproduction by any method or procedure whatsoever. The sole exceptions - noting the author's name and the source - are "analyses and brief quotations justified by the critical, argumentative, educational, scientific or informative nature of the publication into which they are incorporated".
(Articles L 122-4 and L122-5 of the French Intellectual Property Code).
© International Union of Railways (UIC) - Paris, 2004

Printed by the International Union of Railways (UIC)
16, rue Jean Rey 75015 Paris - France, November 2004
Dépôt Légal November 2004

ISBN 2-7461-0878-X (French version)
ISBN 2-7461-0879-8 (German version)
ISBN 2-7461-0880-1 (English version)