SIDDHI SINGH

17BIT0028

Scanned by CamScanner

SEQUENTIAL CIRCUITS

Exp-4.

FLIP-FLOPS

① SR flip-flop

⇓

set-reset

S	R	Q	Q'
0	0	No change	
0	1	0	1
1	0	1	0
1	1	x	x (indeterminant)

Excitation Table

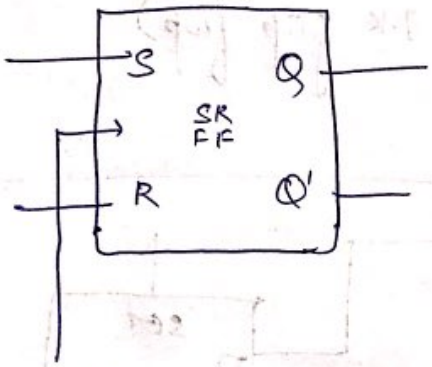

CP

(+ve edge triggered)

Characteristic table

Q(t)	S	R	Q(t+1)
0	0	0	0
0	0	1	0
0	1	0	1
0	1	1	x
1	0	0	1
1	0	1	0
1	1	0	1
1	1	1	x

$Q(t+1) = S + Q(t)R'$

$= S + R'Q$

Scanned by CamScanner

② T flip-flop

↓

(Toggle)

Q(t)	T	Q(t+1)	
0	0	0	(No toggle)
0	1	1	(Toggle zero t
1	1	0	(Toggle 1 to
1	0	1	(No toggle)

Multisim: (T using J-K flip flop)

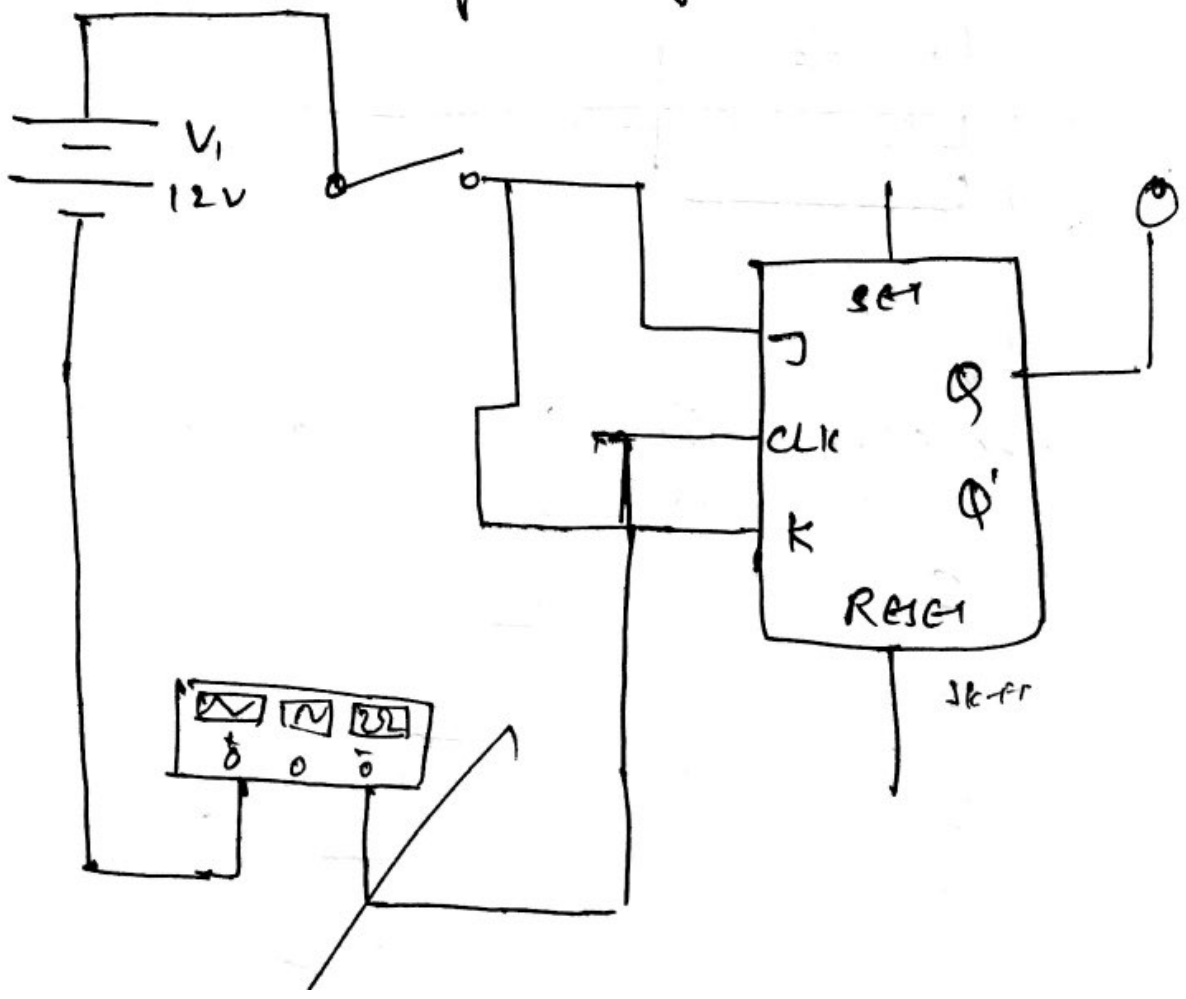

Scanned by CamScanner

c) T Flip Flop

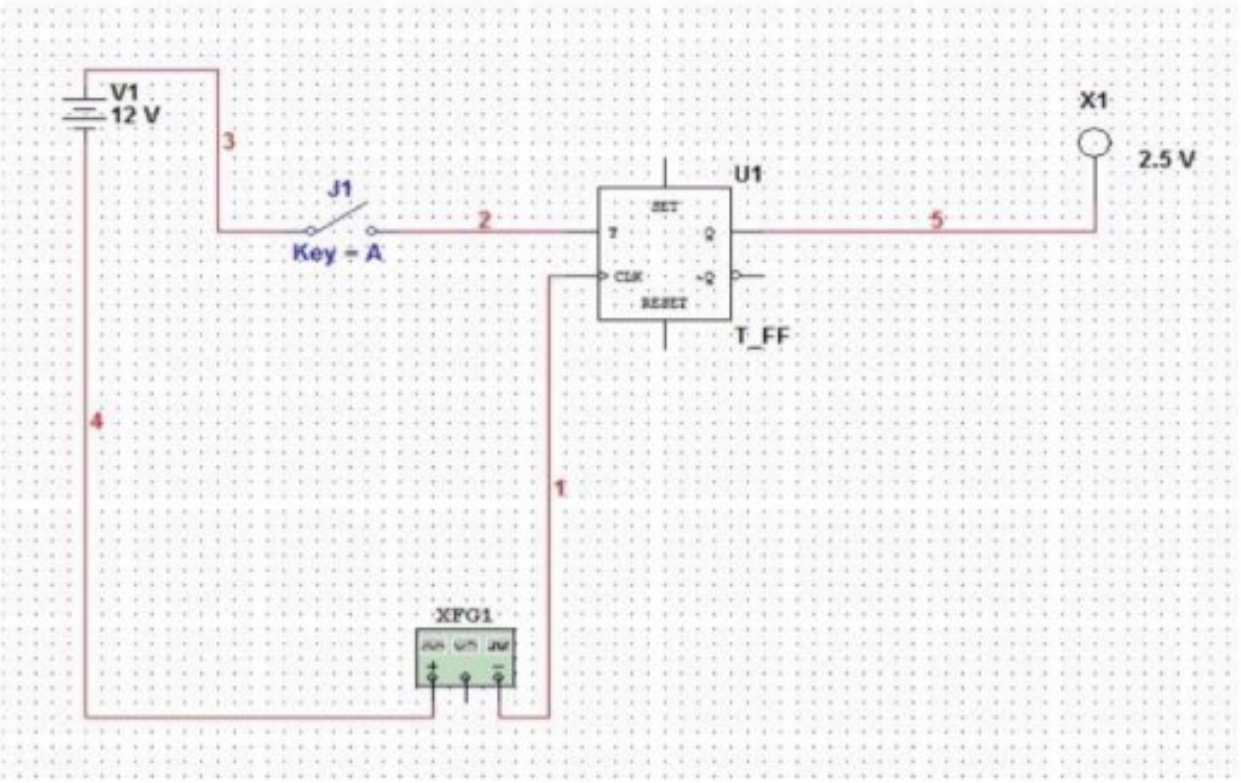

d) T using JK flip flop

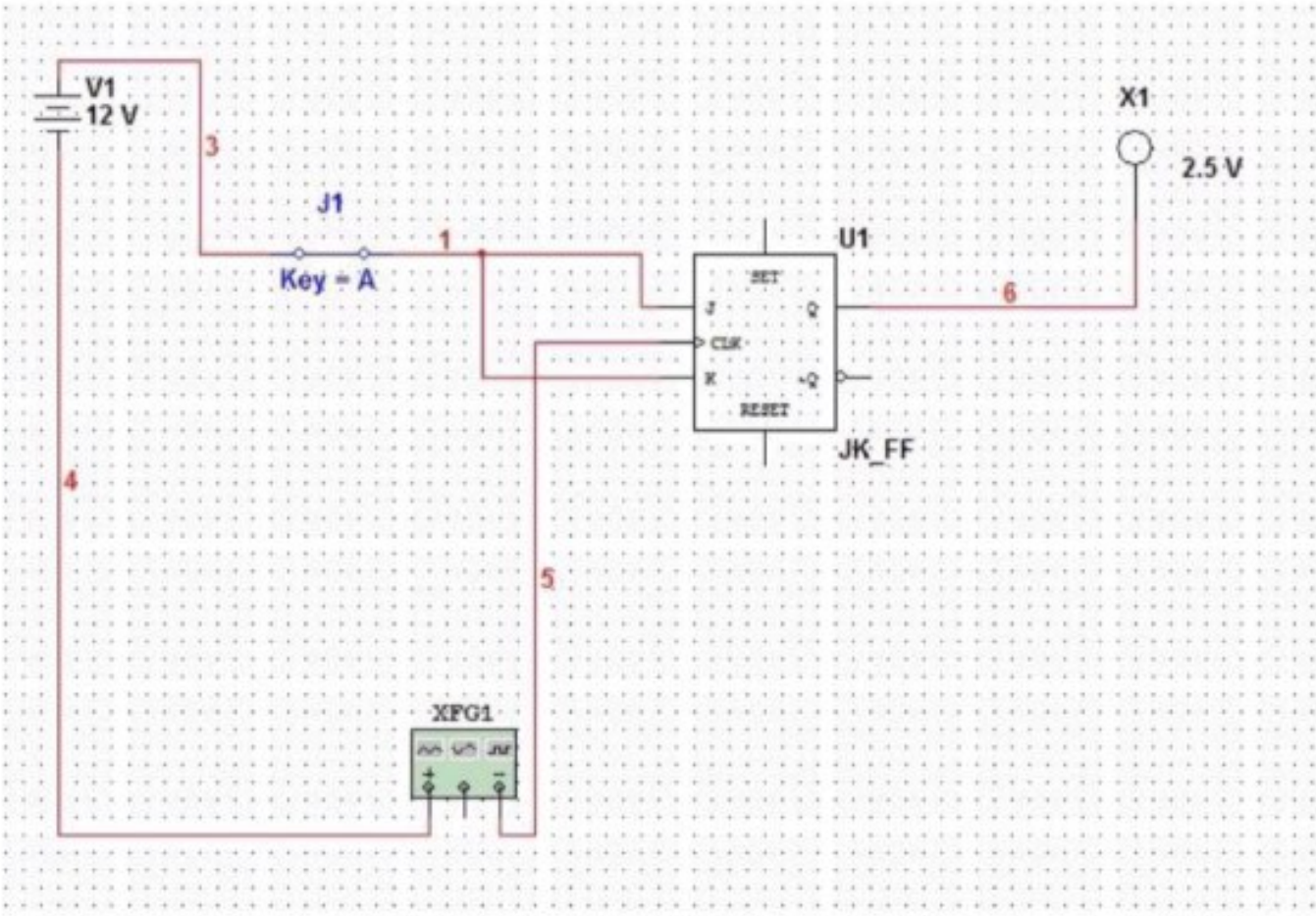

Scanned by CamScanner

(5) D flip-flop

$Q(t+1) = D$

D	Q	Q'
0	0	1
1	1	0

Q(t)	D	Q(t+1)	Q(t+2)	D	Q(t+3)
0	0	0	0	0	0
0	1	1	1	1	1
1	0	0	0	1	1
1	1	1	1	1	1

Multisim:

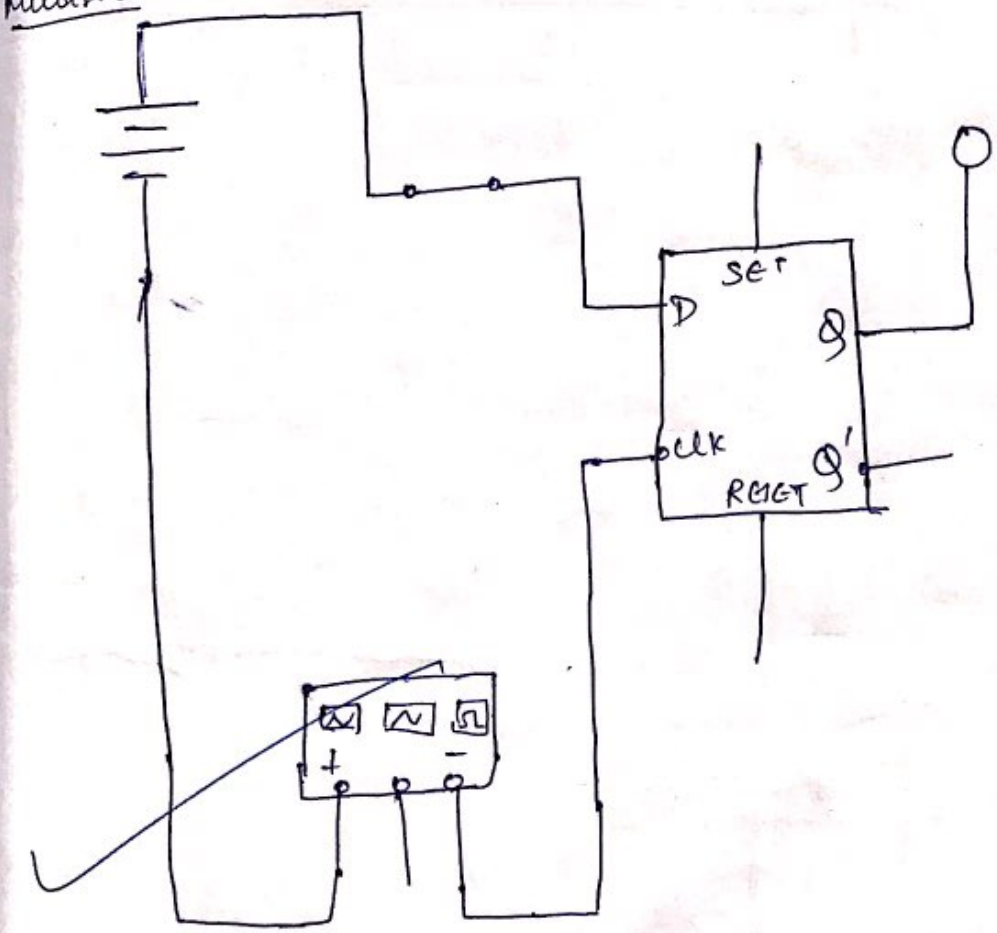

Scanned by CamScanner

b) D Flip Flop

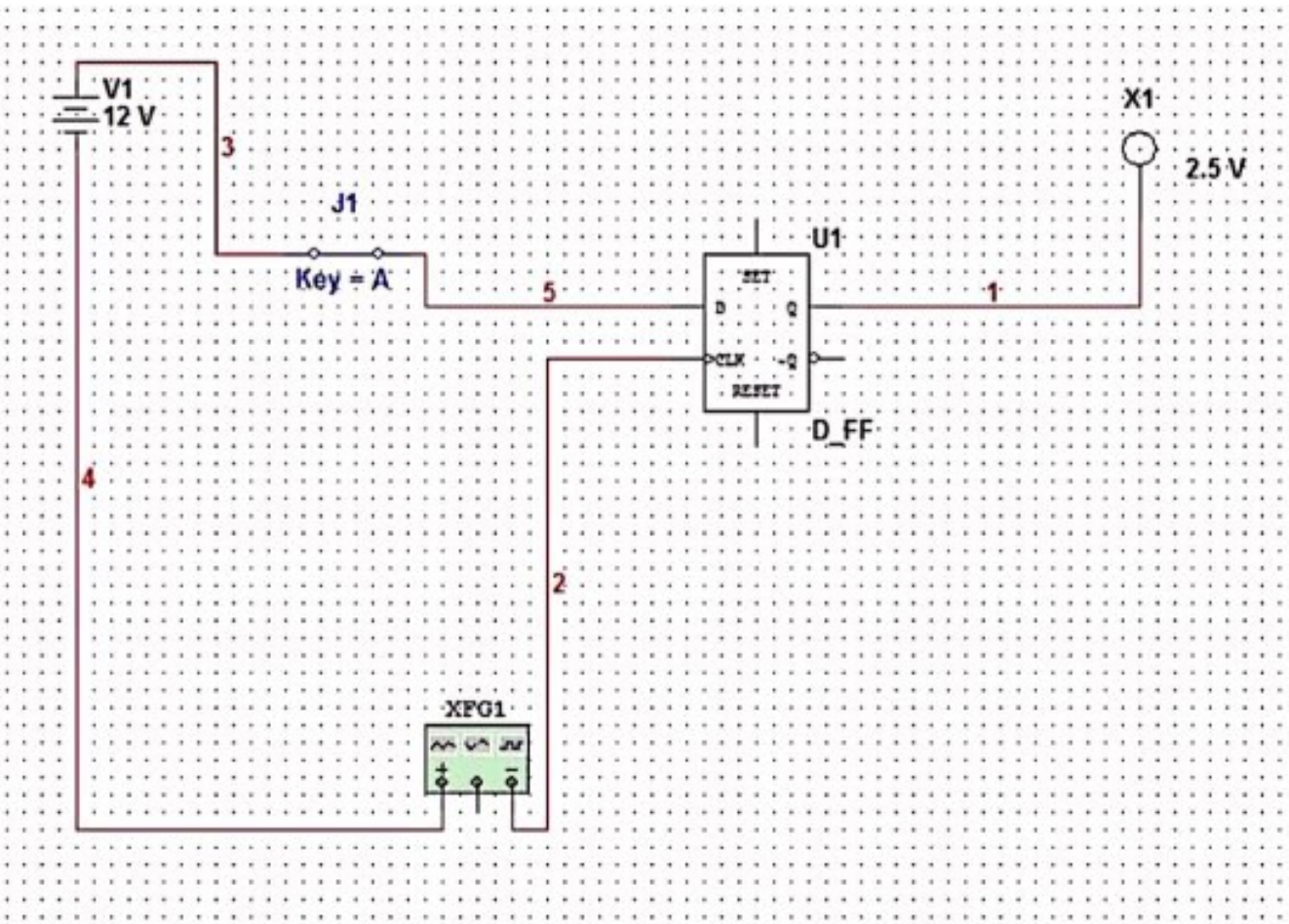

Scanned by CamScanner

(3) JK flip flop.

J	K	Q(t+1)
0	0	Q(t)
0	1	0
1	0	1
1	1	Q'(t)

Characteristic Table

Q(t)	J	K	Q(t+1)
0	0	0	0
0	0	1	0
0	1	0	1
0	1	1	1
1	0	0	1
1	0	1	0
1	1	0	1
1	1	1	0

$Q(t+1) = JQ' + K'Q$

Q(t) \ JK	$J\bar{K}$	$\bar{J}K$	JK	$J\bar{K}$
Q(t)			1	1
Q'(t)	1			1

$= JQ' + K'Q$

Scanned by CamScanner

Multisim:

JK flip flop.

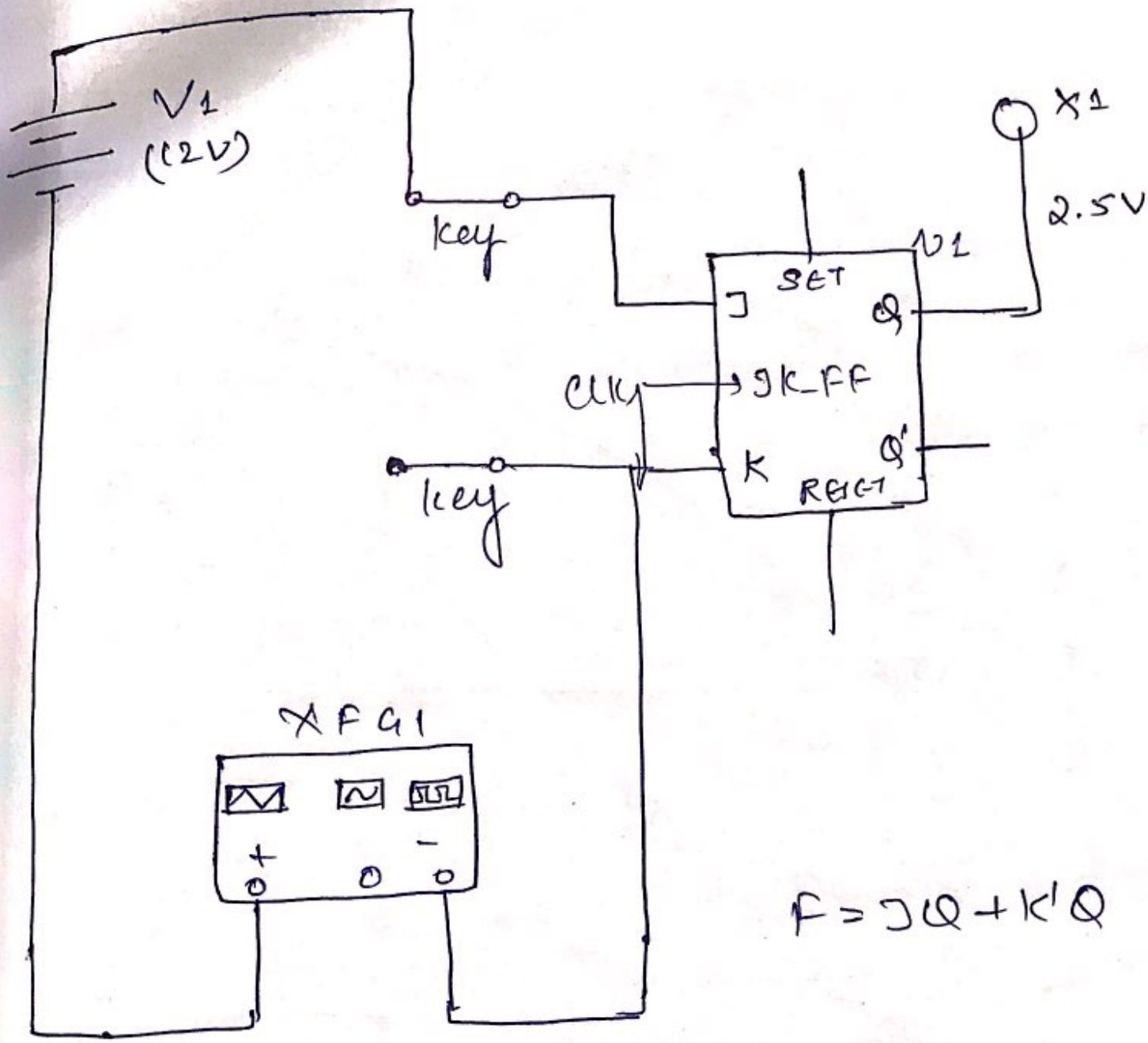

$F = JQ + K'Q$

Scanned by CamScanner

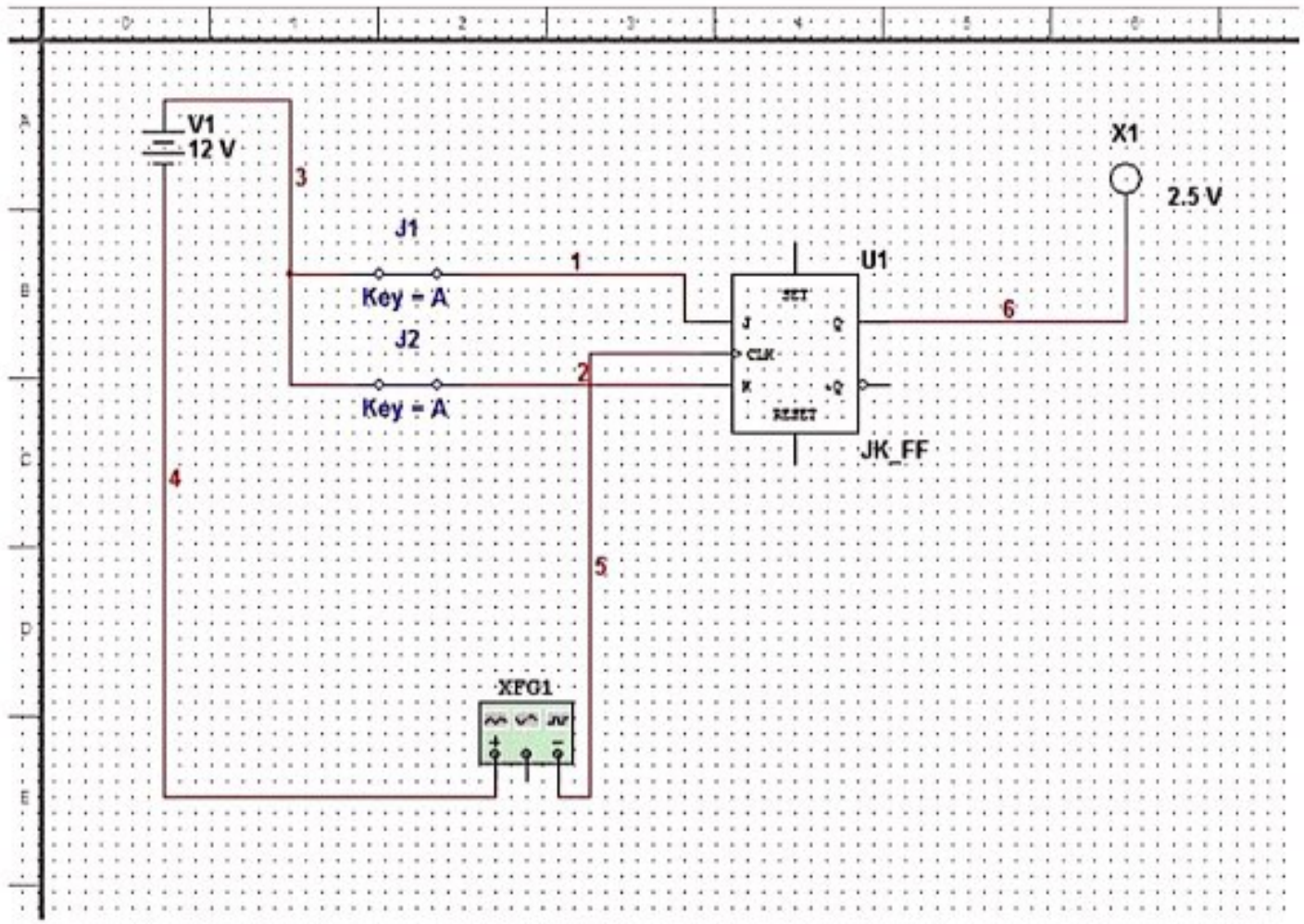

Scanned by CamScanner

Q. Design a sequential circuit using D flip flop.

$D_A = XA + X\bar{B}$

$D_B = \bar{X}A$

$Y = A \oplus B$

A & B : present state of flip-flop

Y : external output

PS		External Input	Flip flop		Next state		
A	B	X	D_A	D_B	A	B	Y
0	0	0	0	0	0	0	0
0	0	1	0	0	0	0	0
0	1	0	0	0	0	0	1
0	1	1	1	0	1	0	1
1	0	0	0	1	0	1	1
1	0	1	1	0	1	0	1
1	1	0	0	1	0	1	0
1	1	1	1	0	1	0	0

$D_A = \Sigma(3, 5, 7)$

$= \bar{A}BX + A\bar{B}X + ABX$

$= \bar{A}BX + AX(\bar{B} + B)$

$= \bar{A}BX + AX$

$= X(A + \bar{A}B)$

$= X(A + B)$

$= XA + XB$

$D_B = \Sigma(4, 6)$

$= A\bar{B}\bar{X} + AB\bar{X} = A\bar{X}$

Scanned by CamScanner

STATES: 00, 01, 10 & 11

X : 0, 1

Y : 0, 1

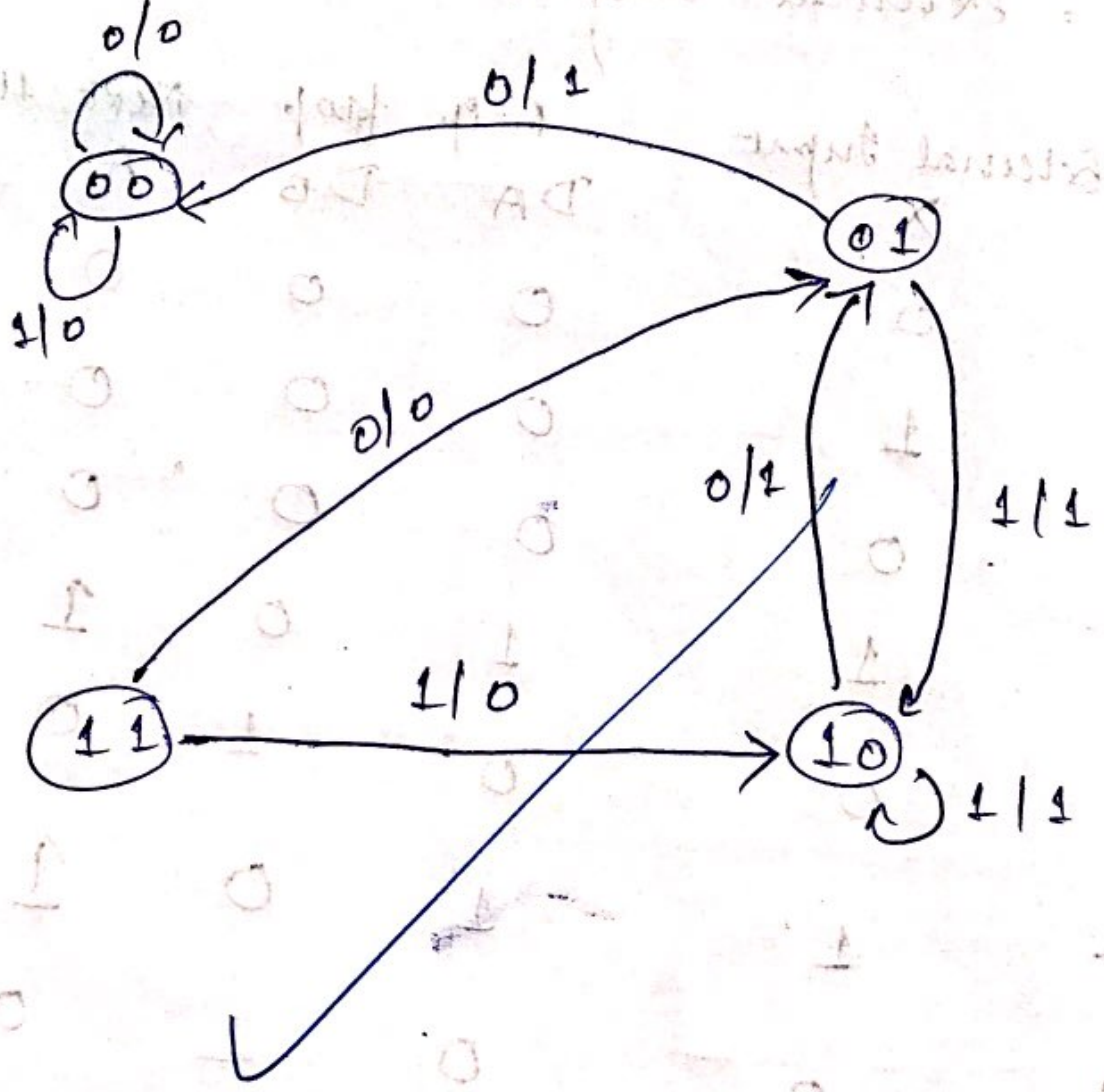

Scanned by CamScanner

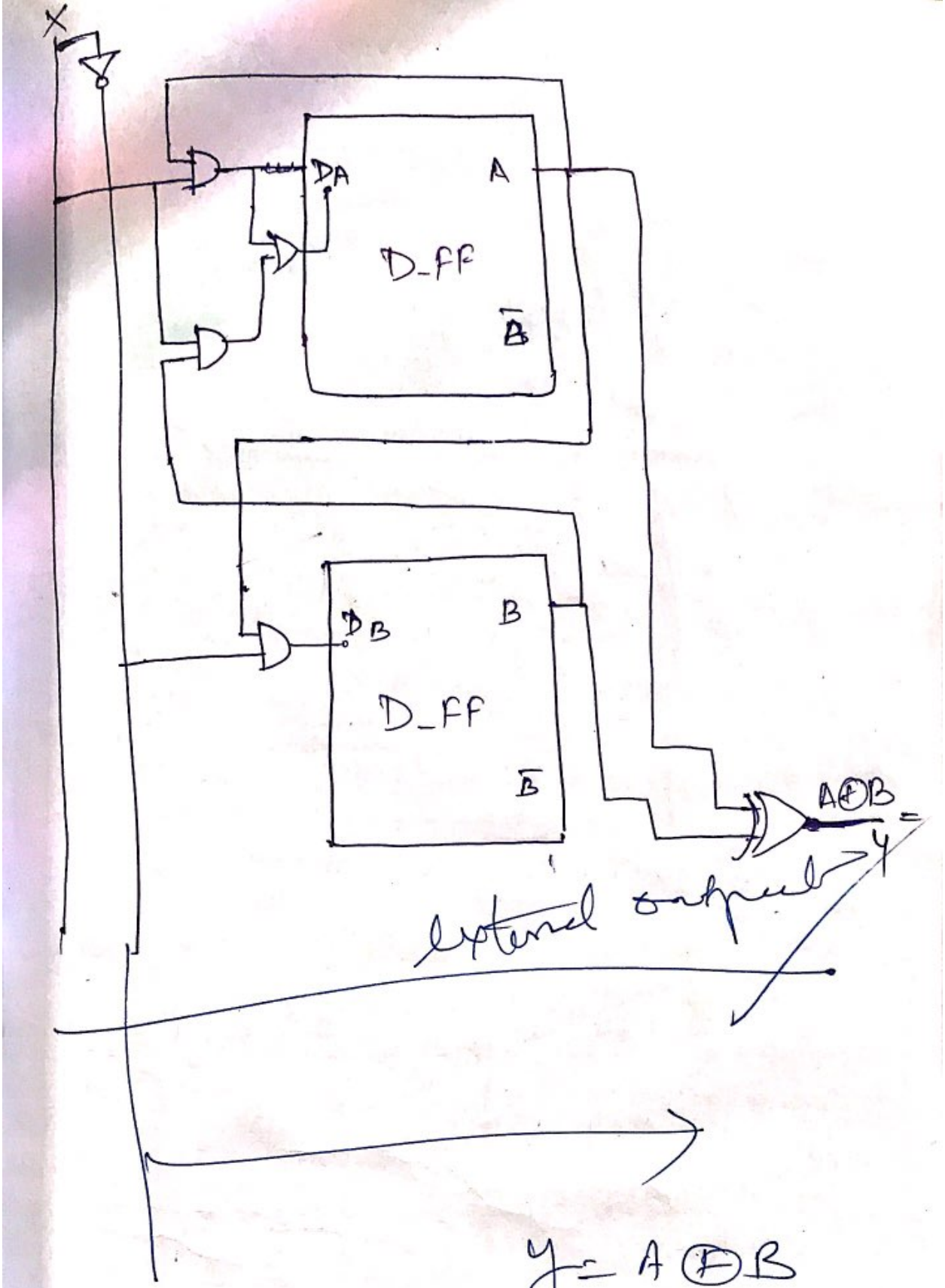

$y = A \oplus B$

is missing

blanchard

complete it.

Scanned by CamScanner

Question 1:

Sequential Circuit Analysis

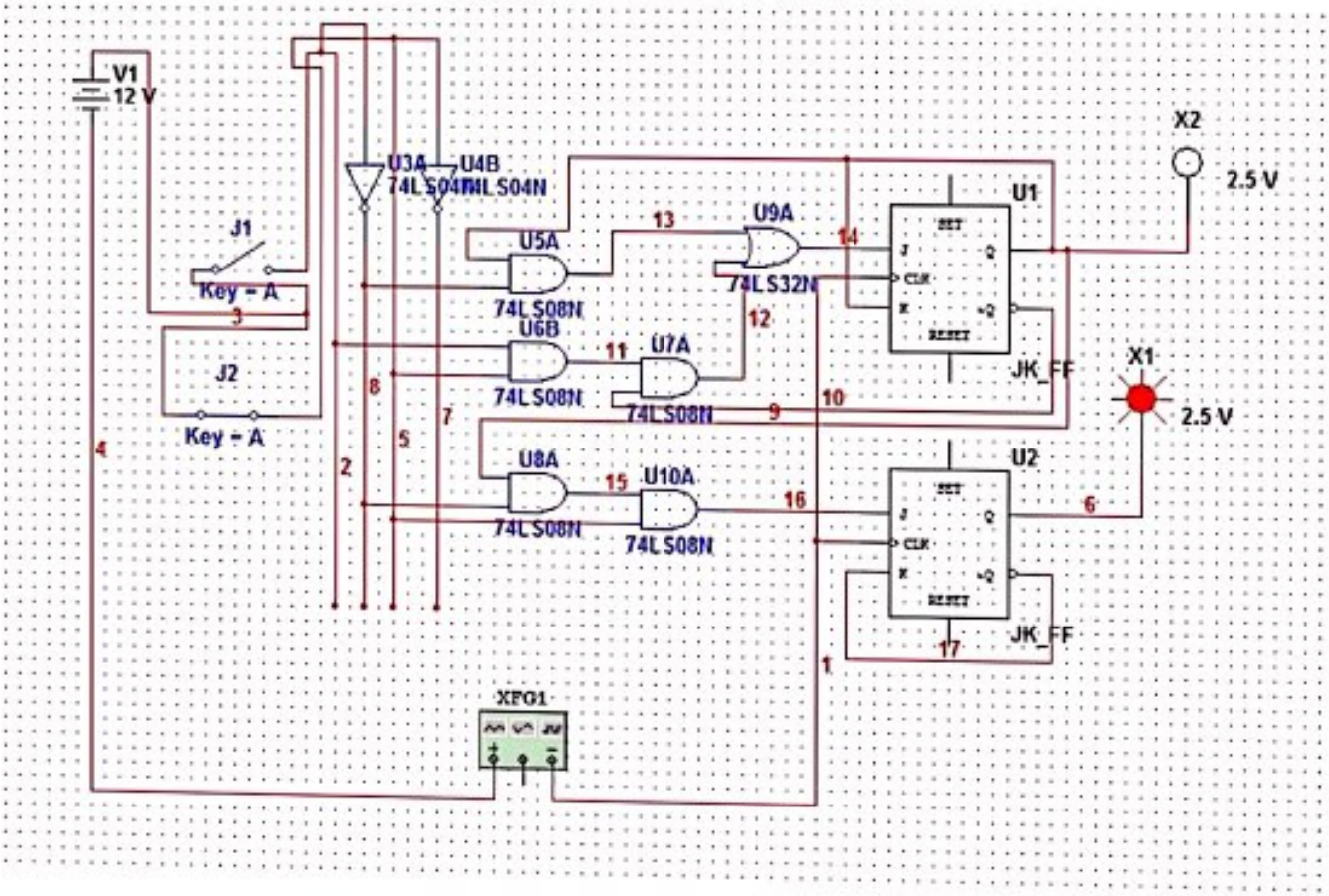

Scanned by CamScanner

Q. Design a sequential circuit using JK flip-flop.

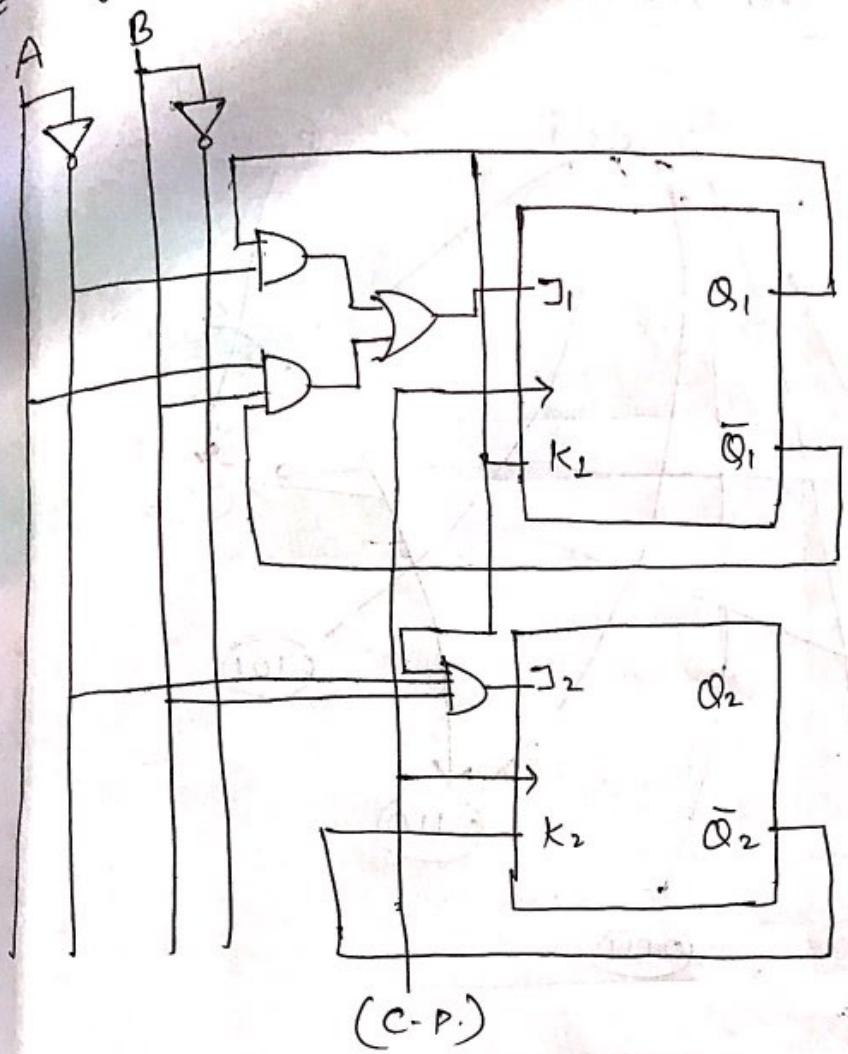

$J_1 = \bar{A}Q_1 + AB\bar{Q}_1$, $K_1 = Q_1$

$J_2 = Q_1\bar{A}B$, $K_2 = \bar{Q}_2$

PS								N.S.	
Q_1	Q_2	A	B	J_1	K_1	J_2	K_2	Q_1	Q_2
0	0	0	0	0	0	0	1	0	0
0	0	0	1	0	0	0	1	0	0
0	0	1	0	0	0	0	1	0	0
0	0	1	1	1	0	0	1	1	0
0	1	0	0	0	0	0	0	0	1
0	1	0	1	0	0	0	0	0	1
0	1	1	0	0	0	0	0	0	1
0	1	1	1	1	0	0	0	0	1

Scanned by CamScanner

1	0	0	0	1	1	0	1	0	0
1	0	0	1	1	1	1	1	0	1
1	0	1	0	0	1	0	1	0	0
1	0	1	1	0	1	0	1	0	0
1	1	0	0	1	1	0	0	0	1
1	1	0	1	1	1	1	0	0	1
1	1	1	0	0	1	0	0	0	1
1	1	1	1	0	1	0	0	0	1

$J_1 =$

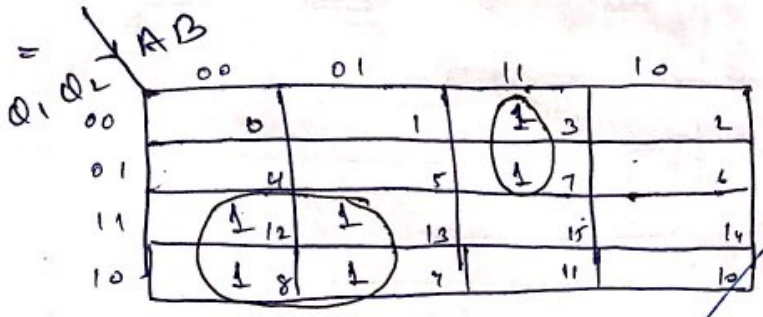

$$\bar{A}Q_1 + AB\bar{Q}_1$$

$K_1 =$

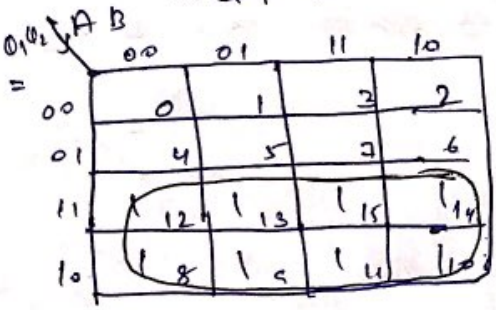

$= Q_1$

$J_2 =$

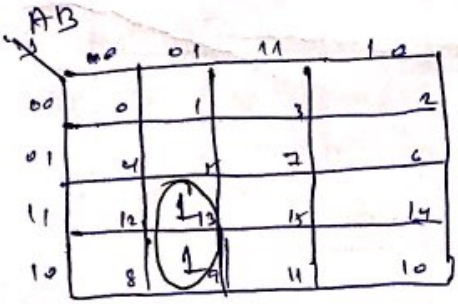

$= Q_1\bar{A}B$

$K_2 =$

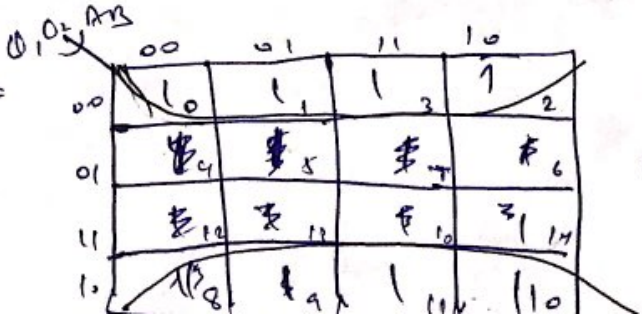

$= \bar{Q}_2$

Scanned by CamScanner

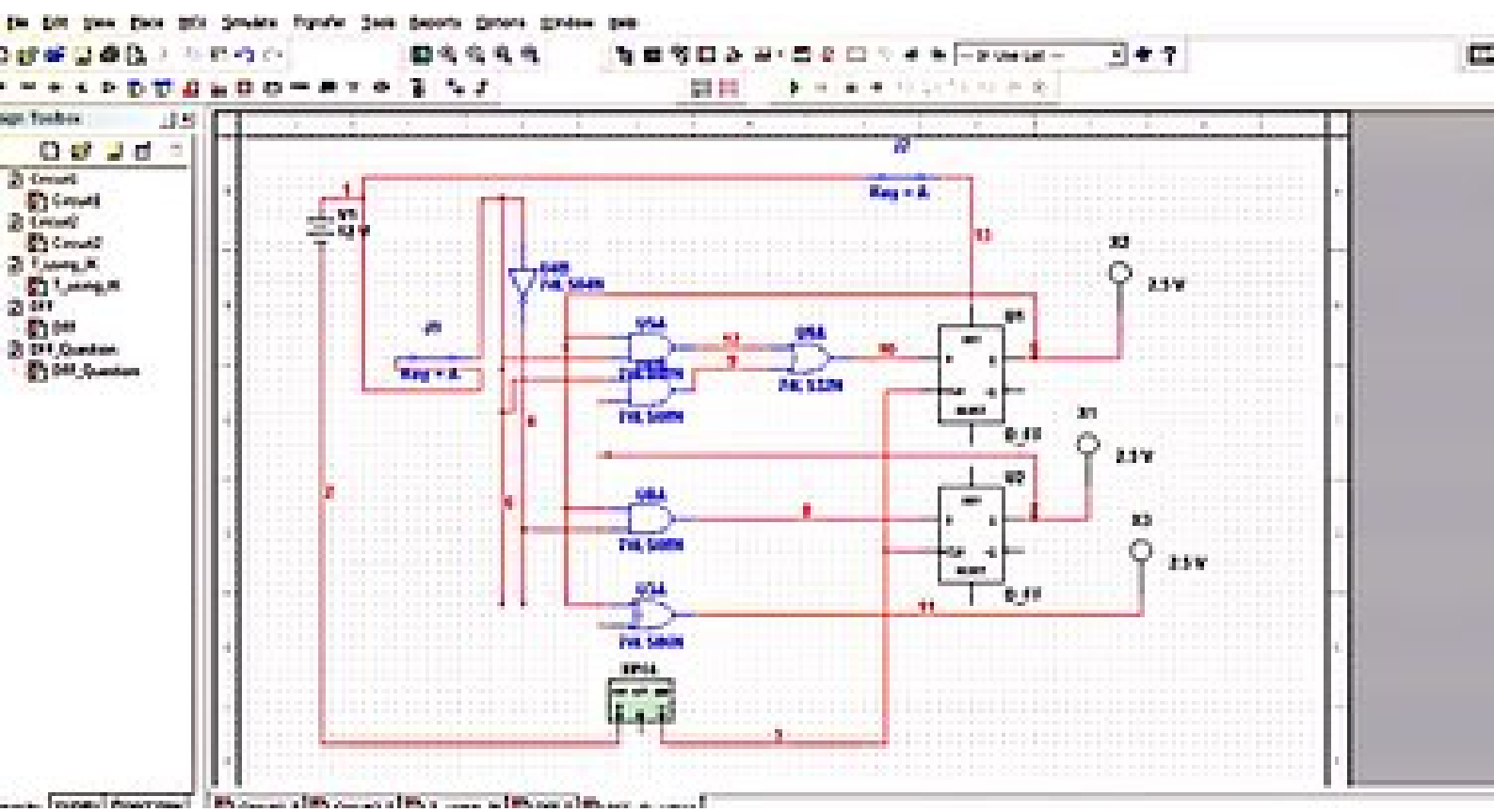

Scanned by CamScanner