AN INDUSTRY ORIENTED MINI PROJECT REPORT

On

SMART LOAD BALANCING OF TRANSFORMERS USING MICROCONTROLLER BASED AUTOMATION

Submitted in the partial fulfilment of the requirements for the award of

BACHELOR OF TECHNOLOGY

IN

ELECTRONICS AND COMMUNICATION ENGINEERING

SUBMITTED BY

PAIDI SIDDHARTH REDDY	**22BK1A0490**
PAPAIAHGARI VISHNU VARDHAN	**22BK1A0492**
SHAIK IBRAHIM	**21BK1A04A5**

UNDER THE ESTEEMED GUIDANCE OF

MS.M.HAMSALEKHA, M.Tech

ASSISTANT PROFESSOR

Giving Wings To Thoughts

DEPARTMENT OF ELECTRONICS AND COMMUNICATION ENGINEERING

St. PETER'S ENGINEERING COLLEGE

(UGC Autonomous)

Approved by AICTE, New Delhi, Accredited by NBA and NAAC with 'A' Grade, Affiliated to JNTU, Hyderabad, Telangana

2022-2026

Certificate

This is to certify that **Mr. P.SIDDHARTH REDDY** from **St PETER'S ENGINEERING COLLEGE;** bearing Roll Number: **22BK1A0490** has done the project entitled **"SMART LOAD BALANCING OF TRANSFORMERS USING MICROCONTROLLER BASED AUTOMATION"** under the guidance of **Mr. Sathish** during the month of **February 2025**. This is based on bonafide work carried out at **ELECTRONICS AND COMMUNICATION ENGINEERING** division, **HVS Technologies** under my guidance. His performance and conduct during this project was good.

HVS Technologies
HYDERABAD.

GUIDE
(Mr. Sathish)
Managing Director
HVS Technolog
AMEERPET,
HYDERABAD

HVS
Hub for Versatile Science & Technologies

Certificate

This is to certify that **MRS. P.VISHNUVARDHAN** from **St PETER'S ENGINEERING COLLEGE;** bearing Roll Number: **22BK1A0492** has done the project entitled **"SMART LOAD BALANCING OF TRANSFORMERS USING MICROCONTROLLER BASED AUTOMATION"** under the guidance of **Mr. Sathish** during the month of **February 2025**. This is based on bonafide work carried out at **ELECTRONICS AND COMMUNICATION ENGINEERING** division, **HVS Technologies** under my guidance. His performance and conduct during this project was good.

GUIDE
(Mr. Sathish)
Managing director

HVS Technologies
HYDERABAD

Managing Director
HVS Technologies
AMEERPET,
HYDERABAD

HVS
Hub for Versatile Science & Technologies

Certificate

This is to certify that **MR.SK.IBRAHIM** from **St PETER'S ENGINEERING COLLEGE;** bearing Roll Number: **21BK1A04A5** has done the project entitled **"SMART LOAD BALANCING OF TRANSFORMERS USING MICROCONTROLLER BASED AUTOMATION"** under the guidance of **Mr. Sathish** during the month of **February 2025**. This is based on bonafide work carried out at **ELECTRONICS AND COMMUNICATION ENGINEERING** division, **HVS Technologies** under my guidance. His performance and conduct during this project was good.

GUIDE
(Mr. Sathish)
Managing Director
HVS Technologies
AMEERPET,
HYDERABAD

HVS Technologies
HYDERABAD

St. PETER'S ENGINEERING COLLEGE

UGC - AUTONOMOUS

Affiliated to JNTUH, Approved by AICTE, Accredited by NAAC with "A" Grade, NBA Programe Accredited (EEE, CSE, ECE)

DEPARTMENT OF ELECTRONICS & COMMUNICATION ENGINEERING

CERTIFICATE

This is to certify that an Industry Oriented Mini Project entitled "SMART LOAD BALANCING OF TRANSFORMERS USING MICROCONTROLLER BASED AUTOMATION is carried out by PAIDI SIDDHARTH REDDY (22BK1A0490), PAPAIAHGARI VISHNUVARDHAN (22BK1A0492), SHAIK IBRAHIM (21BK1A04A5) in partial fulfilment for the award of the degree of **Bachelor of Technology in ELECTRONICS AND COMMUNICATION ENGINEERING** is a record of bonafide work done by them under my supervision during the academic year "2024 – 2025".

INTERNAL GUIDE
Ms.M.Hamsalekha **MTech.**
Assistant Professor
Department of ECE
St. Peter's Engineering College,
Hyderabad

HEAD OF THE DEPARTMENT
Dr. K. Narendar **MTech., Ph.D.**
Associate Professor, HOD
Department of ECE
St. Peter's Engineering College,
Hyderabad

PROJECT COORDINATOR
Dr. CH. Saiteja **MTech.,Ph.D.**
Assistant Professor
Department of ECE
St. Peter's Engineering College,
Hyderabad

EXTERNAL EXAMINER

ACKNOWLEDGEMENT

We sincerely express our deep sense of gratitude to **Ms.M.HAMSALEKHA,** for her valuable guidance, encouragement and cooperation during all phases of the project.

We are greatly indebted to our Project Coordinator **Dr.CH. SAITEJA,** for providing valuable advice, constructive suggestions and encouragement without whom it would not been possible to complete this project.

It is a great opportunity to render our sincere thanks to **Dr.K.NARENDAR,** Head of the Department, Electronics and Communication Engineering for his timely guidance and highly interactive attitude which helped us a lot in successful execution of the Project.

We are extremely thankful to our Principal **Dr.N.CHANDRA SEKHAR REDDY,** who stood as an inspiration behind this project and heartfelt for him endorsement and valuable suggestions.

We respect and thank our secretary **Sri.T.V.REDDY,** for providing us an opportunity to do the project work at **ST.PETER'S ENGINEERING COLLEGE** and we extremely thankful to him for providing such a nice support and guidance which made us to complete the project.

We also acknowledge with a deep sense of reverence, our gratitude towards our parents, who have always supported us morally as well as economically. We also express gratitude to all our friends who have directly or indirectly helped us to complete this project work. We hope that we can build upon the experience and knowledge that we have gained and make a valuable contribution towards the growth of the society in coming future.

INSTITUTE VISION

To be a renowned Educational Institution that moulds Students into Skilled Professionals fostering Technological Development, Research and Entrepreneurship meeting the societal needs.

INSTITUTE MISSION

IM1: Making students knowledgeable in the field of core and applied areas of Engineering to innovate Technological solutions to the problems in the Society.

IM2: Training the Students to impart the skills in cutting edge technologies, with the help of relevant stake holders.

IM3: Fostering conducive ambience that inculcates research attitude, identifying promising fields for entrepreneurship with ethical, moral and social responsibilities.

St. PETER'S ENGINEERING COLLEGE

Giving Wings to Thoughts

ESTD : 2007

UGC - AUTONOMOUS

Affiliated to JNTUH, Approved by AICTE, Accredited by NAAC with "A" Grade, NBA Programe Accredited (EEE, CSE, ECE)

DEPARTMENT OF

ELECTRONICS AND COMMUNICATION ENGINEERING

DEPARTMENT VISION

To evolve the department as a center of excellence in Electronics and Communication Engineering education in the country, to train students in contemporary technologies to meet the needs of global industry and to develop them into skillful engineers imbued with knowledge of core as well as inter-disciplinary domains, human values, and professional ethics.

DEPARTMENT MISSION

DM_1. To adopt pedagogical processes, facilities to meet the educational objectives and outcomes of emerging Technologies in the field of Electronics.

DM_2. To prepare for higher education, employment, Intellectual professional attitude, Industrial research aptitude, lifelong learning, entrepreneurial practices, ethical values, and social concern.

DM_3. To impart knowledge in the field of Electronics and its related areas with a focus on developing the required competencies and virtues to meet the requirements of society.

PROGRAM OUTCOMES (POs)

ENGINEERING GRADUATES WILL BE ABLE TO:

1: ENGINEERING KNOWLEDGE: Apply the knowledge of mathematics, science, engineering fundamentals, and an engineering specialization to the solution of complex engineering problems.

2: PROBLEM ANALYSIS: Identify, formulate, research literature, and analyze complex engineering problems reaching substantiated conclusions using the first principles of mathematics, natural sciences, and engineering sciences.

3: DESIGN/DEVELOPMENT OF SOLUTIONS: Design solutions for complex engineering problems and design system components or processes that meet the specified needs with appropriate consideration for public health and safety, and the cultural, societal, and environmental considerations.

4: CONDUCT INVESTIGATIONS OF COMPLEX PROBLEMS: Use research-based knowledge and research methods including design of experiments, analysis, interpretation of data, and synthesis of the information to provide valid conclusions.

5: MODERN TOOL USAGE: Create, select, and apply appropriate techniques, resources, and modern engineering and IT tools including prediction and modeling to complex engineering activities with an understanding of the limitations.

6: THE ENGINEER AND SOCIETY: Apply reasoning informed by the contextual knowledge to assess societal, health, safety, legal and cultural issues, and the consequent responsibilities relevant to the professional engineering practice

7: ENVIRONMENT AND SUSTAINABILITY: Understand the impact of the professional engineering solutions in societal and environmental contexts, and demonstrate the knowledge of, and need for sustainable development.

8: ETHICS: Apply ethical principles and commit to professional ethics and, responsibilities and norms of the engineering practice.

9: INDIVIDUAL AND TEAM WORK: Function effectively as an individual, and as a member or leader in diverse teams, and multidisciplinary settings.

10: COMMUNICATION: Communicate effectively on complex engineering activities with the engineering community and with society at large, such as being able to comprehend and draft effective reports and design documentation, make an effective presentation, give, and receive clear instructions.

11: PROJECT MANAGEMENT AND FINANCE: Demonstrate knowledge and understanding of the engineering and management principles and apply these to one's work, as a member and leader in a team, to manage projects and in a multidisciplinary environment.

12: LIFE-LONG LEARNING: Recognize the need for, and have the preparation and ability to engage in independent and lifelong learning in the broadcast context of technological changes.

PROGRAM EDUCATIONAL OBJECTIVES (PEOs)

PEO1: Graduate shall have a solid foundation and in-depth knowledge in engineering science and technology for a successful career in Electronics & Communication Engineering.

PEO2: Graduates shall become effective collaboration/innovators in efforts to address social, technical, and engineering challenges with continuous learning.

PEO3: Graduates shall engage in professional development through self-study, post-graduation, and research.

PEO4: Graduates shall have integrity, professional and ethical values, team spirit and ethical values, team spirit, and effective communication skills.

PROGRAM SPECIFIC OBJECTIVES (PSOs)

PSO1: Ability to use electronic modern IT tools for the design and analysis of complex electronic systems for additional research activities.

PSO2: Should be able to clearly understand the concepts and applications in the field of communication/network signal processing, embedded systems, and semiconductor technology for excellent adaptability, good interpersonal skills with professional ethics and social responsibilities.

St. PETER'S ENGINEERING COLLEGE
UGC - AUTONOMOUS
Affiliated to JNTUH, Approved by AICTE, Accredited by NAAC with "A" Grade, NBA Programe Accredited (EEE, CSE, ECE)

DEPARTMENT OF

ELECTRONICS AND COMMUNICATION ENGINEERING

DECLARATION

I declare that an Industry Oriented Mini Project entitled **"SMART LOAD BALANCING OF TRANSFORMERS USING MICROCONTROLLER BASED AUTOMATION"** is an Original Work submitted by me. I have actively contributed and submitted in partial fulfilment for the award of degree in "Bachelor of Technology in ECE", at St. Peter's Engineering College, Hyderabad, and this project work has not been submitted by me to any other college or university for the award of any kind of degree.

Batch No: B -05

Program: B. Tech

Branch: ECE

Industry Oriented Mini Project Title: **SMART LOAD BALANCING OF TRANSFORMERS USING MICROCONTROLLER BASED AUTOMATION**

Date Submitted:

Name	Roll Number	Signature
PAIDI SIDDHARTH REDDY	22BK1A0490	
PAPAIAHGARI VISHNU VARDHAN	22BK1A0492	
SHAIK IBRAHIM	21BK1A04A5	

St. PETER'S ENGINEERING COLLEGE
UGC - AUTONOMOUS
Affiliated to JNTUH, Approved by AICTE, Accredited by NAAC with "A" Grade, NBA Programe Accredited (EEE, CSE, ECE)

DEPARTMENT OF ELECTRONICS & COMMUNICATION ENGINEERING

Industry Oriented Mini Project Title: **SMART LOAD BALANCING OF TRANSFORMERS USING MICROCONTROLLER BASED AUTOMATION**

Guide Name: Ms. M.HAMSALEKHA., M. Tech.

STUDENT	ROLL NUMBER
1. PAIDI SIDDHARTH REDDY	22BK1A0490
2. PAPAIAHGARI VISHNU VARDHAN	22BK1A0492
3. SHAIK IBRAHIM	21BK1A04A5

Academic Year: 2024-2025 (YEAR -III SEM-II)

Name of the course from which the principles are applied in the project	Description of the Applications	Attained POs
EMBEDDED SYSTEMS	SMART LOAD BALANCING OF TRANSFORMERS USING MICROCONTROLLER BASED AUTOMATION	PO1, PO4, PO5, PO6, PO7, PO8, PO9, PO11

SIGNATURE OF THE GUIDE HOD

ABSTRACT

ABSTRACT-The aim of the project is automatic load sharing of transformer under over load condition and protect the transformer from damage and give uninterrupted power supply. Due to overloading the current flow exceeds and windings get overheated and may get burnt, hence the efficiency gets dropped. Thus this can protect the transformer by sharing loads by connecting another same rating transformer in parallel through a micro-controller. The micro-controller compares the load on the first transformer with a reference value. When the load exceeds than the reference value, the second transformer will share the extra load. Therefore the two transformers works efficiently and prevented from damage. In this project three modules are used to control the load currents. The first module is a sensing unit, which is used to sense the current of the load and the second module is a control unit. The last module is micro-controller unit and it will read the analog signal from the sensor module and perform some calculation and finally gives control signal to a relay. The advantages of the project is protection of transformer, uninterrupted power supply, circuit protection and for maintenance.

Keywords –*Transformer, Microcontroller, Overloading, Reference value, Relay*

CONTENTS

LIST OF FIGURES

LIST OF TABLES

CHAPTER - 1
INTRODUCTION

1.1 INTRODUCTION TO SMART LOAD BALANCING OF TRANSFORMERS

Power transformers are essential components in electrical distribution systems, ensuring the efficient transmission of electricity from power generation plants to consumers by stepping up or stepping down voltage levels as required. However, one of the most persistent challenges in electrical grid management is the uneven distribution of electrical loads across transformers, which can lead to inefficiencies, overloading, and power losses. When a transformer is subjected to excessive load beyond its rated capacity, it experiences overheating, increased electrical resistance, and accelerated insulation degradation, which can ultimately result in equipment failure, costly maintenance, and prolonged power outages. On the other hand, under loaded transformers contribute to wasted capacity, leading to inefficiencies in energy distribution and higher operational costs.

Traditional load balancing techniques often rely on static transformer configurations, manual monitoring, and scheduled maintenance, which are insufficient in responding to dynamic changes in power demand. As the demand for electricity continues to grow with urbanization, industrial expansion, and the increasing integration of renewable energy sources, it has become imperative to implement advanced solutions for efficient transformer load management. This necessity has led to the development of smart load balancing systems, which utilize modern automation technologies, real-time monitoring, and intelligent control mechanisms to dynamically manage electrical loads across multiple transformers. By incorporating microcontrollers, sensors, communication networks, and artificial intelligence (AI) algorithms, these systems can continuously monitor transformer loads, detect imbalances, and autonomously redistribute the load among available transformers. Unlike traditional approaches, which often require human intervention, smart load balancing operates autonomously, ensuring optimal transformer utilization while minimizing risks associated with overloads or energy wastage.

Embedded systems like ESP32 microcontrollers act as the central processing units in these systems, collecting data from current and voltage sensors installed on transformers. This data is then analyzed in real time, and if an imbalance is detected, the system takes corrective actions by activating switching mechanisms, such as relays, automatic circuit breakers, or power regulators, to redistribute loads efficiently. Moreover, the integration of Internet of Things (IoT) technologies has revolutionized transformer load management by enabling remote monitoring and control, allowing utility operators to oversee transformer performance from centralized locations and respond to issues proactively.

The functionality of smart load balancing systems extends beyond immediate load redistribution to include predictive analytics and demand forecasting, made possible through machine learning (ML) and AI-driven algorithms. These advanced systems not only react to existing load imbalances but also analyze historical data and usage trends to predict future variations in electricity demand, enabling pre-emptive load adjustments. This predictive capability is particularly beneficial in electrical grids that incorporate renewable energy sources, such as solar and wind power, where energy generation is often variable due to weather conditions. Smart load balancing helps stabilize power distribution by dynamically managing load fluctuations and ensuring that transformers operate within their optimal efficiency range. Additionally, smart transformer load balancing plays a crucial role in enhancing energy efficiency, reducing transmission losses, and lowering operational costs for utility companies. It also contributes to sustainable power management, aligning with global efforts to create smart grids—intelligent electrical networks that can self-optimize and adapt to changing energy demands in real time.

The economic and environmental benefits of smart load balancing are significant; by preventing transformer failures, it reduces maintenance costs, equipment replacement expenses, and power outage-related losses, thereby improving service reliability and customer satisfaction. Moreover, by optimizing energy distribution and minimizing losses, smart load balancing systems contribute to lower carbon emissions, supporting cleaner and more sustainable energy usage. As technology continues to advance, the incorporation of edge computing, block chain for secure data transactions, and 5G-enabled communication networks will further enhance the capabilities of smart load balancing, making electrical grids more resilient, adaptive, and efficient. The future of power distribution lies in intelligent automation, and smart load balancing of transformers is a pivotal step toward next-generation energy infrastructure. By integrating AI, IoT, and real-time analytics, these systems are set to revolutionize the way electricity is managed, making power grids more efficient, reliable, and sustainable for the growing demands of the 21st century.

1.2 SIGNIFICANCE OF LOAD BALANCING

Efficient load balancing of transformers is a fundamental aspect of modern electrical power distribution systems, ensuring that electrical loads are evenly distributed across multiple transformers to prevent overloading, minimize energy losses, and enhance the overall efficiency of the grid. In electrical networks, transformers serve as intermediaries that regulate voltage levels for transmission and distribution, making them critical for maintaining power stability. However, transformers often face uneven load distribution due to varying power demands in different locations, leading to overloading in some transformers while others remain underutilized. Overloaded transformers generate excessive heat, which can degrade their insulation, increase power losses due to higher resistance, and ultimately result in equipment failure. This not only shortens the lifespan of transformers but also leads to expensive repair and replacement costs. Conversely, underloaded transformers contribute to inefficiencies, as they continue consuming operational power without being fully utilized, leading to unnecessary energy wastage.

Implementing smart load balancing in transformers helps mitigate these inefficiencies by dynamically redistributing electrical loads based on real-time demand. This is achieved through automation, IoT-based monitoring, and intelligent switching mechanisms, ensuring that no single transformer is subjected to excessive stress. By evenly spreading out the power demand, smart load balancing minimizes voltage fluctuations, power losses, and frequency variations, leading to a more stable and efficient power distribution system. Additionally, as the demand for electricity continues to rise due to population growth and urbanization, load balancing becomes even more crucial in preventing transformer failures and ensuring uninterrupted power supply to consumers. The integration of embedded systems, microcontrollers like ESP32, and AI-driven predictive analytics has further enhanced the efficiency of transformer load management, enabling self-regulating grids that can autonomously adjust to fluctuations in power demand without manual intervention.

Beyond preventing equipment failure, load balancing of transformers plays a crucial role in reducing operational costs and optimizing energy consumption. In power distribution systems, energy losses due to unbalanced loads can be substantial, leading to increased electricity generation requirements and higher fuel consumption in thermal power plants. These losses not only result in higher electricity tariffs for consumers but also place additional strain on energy resources, increasing the overall cost of power generation. By implementing an effective load balancing system, utility providers can reduce transmission and distribution losses, ensuring that a greater percentage of generated electricity reaches end-users without wastage. Moreover, maintenance costs are significantly lowered as transformers operating under balanced loads require fewer repairs and replacements, reducing both direct costs and service downtime. The economic benefits of load balancing extend to industrial sectors as well, where even minor fluctuations in power supply can lead to equipment malfunctions, production delays, and financial losses. Industries reliant on high-power machinery, such as manufacturing plants, data centers, and hospitals, require a stable and uninterrupted power supply, which can only be achieved through efficient load distribution.

Additionally, load balancing facilitates the integration of renewable energy sources into the grid by ensuring that power generated from solar and wind farms is distributed evenly across transformers, preventing overloading in localized areas while maximizing the utilization of available energy. This is especially significant in smart grids, where decentralized power generation from multiple sources requires dynamic load management to maintain grid stability. By leveraging IoT-enabled sensors, cloud-based analytics, and AI-driven automation, smart load balancing systems can predict energy demand, optimize transformer usage, and minimize fluctuations, leading to a more resilient and cost-effective power distribution network.

In addition to technical and economic advantages, smart load balancing of transformers has significant environmental benefits, contributing to sustainable energy management and reduced carbon emissions. One of the primary environmental concerns in traditional power distribution systems is the inefficiency caused by energy losses, which forces power plants to burn more fossil fuels to compensate for lost electricity. These inefficiencies contribute to increased greenhouse gas emissions, air pollution, and resource depletion. By optimizing transformer load distribution, energy losses are minimized, leading to a reduction in overall electricity demand and subsequently lowering the carbon footprint of power generation.

Furthermore, as renewable energy adoption continues to grow, efficient load balancing becomes essential in ensuring that green energy sources are utilized effectively without causing instability in the grid. For example, solar and wind power generation fluctuates based on weather conditions, making real-time load adjustments critical for maintaining power quality. Smart load balancing systems equipped with AI-driven predictive analytics can forecast energy production patterns and adjust transformer loads accordingly, ensuring a seamless transition between conventional and renewable energy sources.

Additionally, energy storage systems, such as battery storage units, can be integrated into load balancing frameworks to store excess energy and redistribute it during peak demand periods, further enhancing grid stability. By reducing transformer overloading and unnecessary energy consumption, smart load balancing contributes to lowering energy costs for consumers, increasing the efficiency of power distribution, and promoting a more sustainable energy ecosystem. As governments and energy regulators worldwide push for cleaner and more energy-efficient power systems, the adoption of smart load balancing technologies will play a crucial role in achieving global sustainability goals and reducing dependence on fossil fuels.

1.3 CLASSIFICATION OF SMART LOAD BALANCING OF TRANSFORMERS

Smart load balancing of transformers can be classified based on control methods, implementation techniques, operational strategies, and integration with renewable energy sources. In terms of control methods, traditional manual load balancing relies on human intervention, making it inefficient for real-time adjustments. In contrast, automatic load balancing uses microcontrollers, sensors, and IoT-based monitoring to redistribute loads dynamically, ensuring better efficiency. The most advanced approach is AI-driven load balancing, which leverages machine learning (ML) and predictive analytics to forecast load variations and proactively adjust transformer utilization.

Regarding implementation techniques, hardware-based load balancing involves physical components like current sensors, relays, and voltage regulators for real-time monitoring and control. Software-based load balancing, on the other hand, depends on cloud computing, AI analytics, and remote control systems, making it suitable for large-scale power distribution networks. Hybrid systems combine both hardware and software, using real-time sensors, AI-based analytics, and automated switching mechanisms to achieve precise and adaptive load balancing, a crucial component of smart grid technology.

From an operational perspective, reactive load balancing responds to transformer overloading only after an issue is detected, which may not always prevent system failures. Proactive load balancing, however, uses predictive algorithms to anticipate load fluctuations and make adjustments in advance, thereby enhancing transformer longevity and minimizing downtime. Dynamic load balancing, the most advanced method, continuously monitors and redistributes loads in real-time, ensuring stable power distribution and grid efficiency. Additionally, when considering the integration of renewable energy, grid-tied load balancing ensures stable energy distribution between renewable and conventional power sources, optimizing transformer loads while reducing fossil fuel dependency.

Off-grid load balancing is designed for standalone systems, where renewable energy sources like solar and wind power are managed efficiently to prevent transformer overload. Finally, hybrid energy load balancing integrates multiple power sources—including solar, wind, hydro, and battery storage—to stabilize energy distribution. These classifications highlight how smart load balancing systems enhance grid reliability, reduce operational costs, and contribute to sustainable energy management by optimizing transformer performance.

1.4 PROJECT OVERVIEW

An embedded system is a combination of software and hardware to perform a dedicated task. Some of the main devices used in embedded products are Microprocessors and Microcontrollers. Microprocessors are commonly referred to as general purpose processors as they simply accept the inputs, process it and give the output. In contrast, a microcontroller not only accepts the data as inputs but also manipulates it, interfaces the data with various devices, controls the data and thus finally gives the result.

The project “Smart Load Balancing of Transformers” using ESP32 microcontroller is an exclusive project which is used to transformers sharing whenever the load increased for certain value and display the load status on LCD.

1.5 OBJECTIVES

The objectives of implementing Smart Load Balancing of Transformers using ESP32 microcontroller typically include:

Efficient Load Distribution: Ensuring that electrical loads are evenly distributed across transformers to prevent overloading and enhance their lifespan.

Real-Time Monitoring: Utilizing the ESP32's capabilities to monitor parameters like voltage, current, and temperature in real-time.

Improved Reliability: Reducing the risk of transformer failures by proactively managing load and detecting anomalies.

Energy Optimization: Minimizing energy wastage and improving overall system efficiency.

Cost Reduction: Lowering maintenance costs and downtime through predictive maintenance and smart management.

CHAPTER - 2
LITERATURE SURVEY

The field of smart load balancing of transformers using ESP32 microcontrollers has become a focal point for researchers addressing the ever-growing challenges of electrical grid management. Transformers, being critical components in electrical distribution networks, often face issues like overloading and imbalanced load distribution, leading to inefficiencies and risks of failure. The integration of Internet of Things (IoT) technologies, particularly microcontrollers like the ESP32, has paved the way for innovative solutions to these challenges. The ESP32, known for its versatile features like integrated Wi-Fi and Bluetooth, low cost, and high processing power, offers a robust platform for real-time monitoring and load management.

Research studies have extensively explored how the ESP32 can be deployed to collect and process data from transformers, using sensors to track parameters such as voltage, current, temperature, and power quality. This data serves as the foundation for intelligent algorithms, enabling dynamic adjustments to the load distribution and mitigating the risks associated with overloading. The literature highlights the significant contributions of ESP32-based systems in transforming conventional electrical grids into smarter, more resilient networks.

A critical area of focus in the literature is the deployment of advanced algorithms for load balancing, leveraging the computational capabilities of the ESP32. Traditional load management strategies often lack the real-time adaptability needed to address the dynamic nature of modern electrical grids. However, with the integration of the ESP32 microcontroller, researchers have developed and implemented machine learning (ML) algorithms, fuzzy logic systems, and rule-based approaches to analyze and predict load patterns. For instance, ML models trained on historical and real-time data enable the ESP32 to identify patterns of load imbalance, optimize transformer utilization, and recommend proactive adjustments to prevent failures.

Studies have also investigated the ESP32's ability to communicate with cloud-based platforms, where extensive datasets are stored and processed for further optimization. By facilitating seamless connectivity and real-time analytics, the ESP32 emerges as a key enabler of adaptive and efficient load-balancing solutions. Furthermore, several publications have demonstrated the use of edge computing techniques, wherein the ESP32 processes data locally to reduce latency and enhance the responsiveness of load-balancing systems.

The integration of renewable energy sources into power grids presents new opportunities and challenges, as explored in the literature on smart load balancing with the ESP32. With an increasing emphasis on sustainability, the need to effectively manage hybrid energy systems—combining solar, wind, and grid power—has gained prominence. Researchers have examined how the ESP32 microcontroller can be utilized to monitor and balance loads among these diverse energy sources, ensuring stability and optimal performance.

Studies highlight the microcontroller's role in collecting data from renewable energy systems, analyzing fluctuations in energy generation, and facilitating seamless energy flow across the grid. Additionally, the ESP32's compatibility with various communication protocols enables it to act as a central node in distributed energy management systems. These systems ensure that the benefits of renewable energy are maximized while maintaining the reliability of the electrical grid. By addressing issues such as intermittent energy supply and variable load demands, the ESP32-based smart load-balancing systems contribute to the global transition toward renewable energy adoption.

The role of artificial intelligence (AI) in enhancing smart load-balancing systems using the ESP32 has been a significant focus in recent research. Scholars have explored the integration of AI algorithms to improve the predictive and adaptive capabilities of load-balancing systems. For instance, neural networks and reinforcement learning techniques have been employed to enable the ESP32 to make autonomous decisions regarding load redistribution. These AI-driven approaches enhance the efficiency and accuracy of transformer load management, enabling rapid responses to fluctuations in demand.

The literature also emphasizes the importance of edge AI, where the computational tasks are performed directly on the ESP32, minimizing the dependence on cloud-based resources and ensuring faster decision-making. Furthermore, the integration of AI with IoT technologies has opened up possibilities for self-optimizing and self-healing electrical grids. By leveraging the capabilities of the ESP32, researchers aim to develop systems that can adapt to changing conditions, predict potential issues, and implement corrective actions autonomously, thereby enhancing the resilience and sustainability of power distribution networks.

While the potential benefits of ESP32-based smart load-balancing systems are immense, researchers have also delved into the challenges associated with their implementation. Issues such as hardware limitations, network reliability, cybersecurity threats, and scalability have been widely discussed in the literature. The ESP32, though powerful, operates within certain constraints that may limit its performance in large-scale applications. To address these challenges, studies have proposed enhancements such as energy-efficient hardware designs, robust communication protocols, and encryption techniques to ensure the security and reliability of data transmission.

Moreover, the importance of establishing standardized frameworks for the deployment of IoT-based load-balancing systems has been emphasized. These frameworks would facilitate interoperability among different components, ensuring seamless integration and scalability. The literature underscores the need for continuous innovation and collaboration among researchers, industry stakeholders, and policymakers to overcome these obstacles and unlock the full potential of smart load-balancing technologies.

In summary, the body of research on smart load balancing of transformers using the ESP32 microcontroller reflects a rapidly advancing field with significant implications for the future of energy distribution. The integration of IoT, AI, and renewable energy technologies has enabled the development of innovative solutions that address the challenges of traditional load management systems. The ESP32, with its unique features and capabilities, has emerged as a cornerstone of these advancements, offering a versatile and cost-effective platform for real-time monitoring, analysis, and optimization. However, the successful implementation of these systems requires addressing challenges related to scalability, security, and interoperability. As the demand for sustainable and resilient energy solutions continues to grow, the contributions of ESP32-based smart load-balancing systems are expected to play a pivotal role in shaping the future of electrical grids. Researchers and practitioners alike remain committed to exploring new frontiers and advancing the state of the art in this transformative domain. Furthermore, real-time response times may be affected by network congestion, necessitating edge computing solutions where ESP32 processes critical data locally before transmitting it to the cloud.

Table 2.1: Expanded Summary of Key Works

Author / Year	**Methodology**	**Advantages**	**Limitations**	**Relevance to This Study**
Majeed et al. (2023)	The use of fuzzy logic for automatic load sharing of transformers in a distributed generation environment	Emphasizing the role of intelligent systems in optimizing load distribution across transformers.	Integration Challenges Adaptability Issues Computational Overhead	Highlighted the relevance of fuzzy logic in distributed generation, advancing intelligent control strategies for decentralized power networks.
Nebey (2020)	Automatic load sharing of distribution transformers to protect against overload conditions	Demonstrating the practical application of load sharing techniques in enhancing transformer reliability.	Connectivity Issues Cybersecurity Risks Initial Cost and Infrastructure	Showcased practical implementations of automatic load sharing, reinforcing the importance of real-time control in preventing transformer overloads.
Mishra et al. (2020)	Optimal load transfer and transformer parameter monitoring using fuzzy logic	Highlighting the effectiveness of fuzzy controllers in managing transformer loads under varying conditions.	Complex Rule Definition Dependency on Sensor Accuracy Computational Intensity	Demonstrated the effectiveness of fuzzy logic in load balancing, providing a basis for AI-driven transformer monitoring and optimization.
Gupta et al. (2016)	A microcontroller-based system for automatic transformer distribution and load sharing	Prevent transformer overloading by dynamically managing the load between	Limited Processing Power Scalability Issues Communicat	Laid the foundation for microcontroller-based automatic transformer load sharing, which is essential for modern IoT-enabled smart grid applications.

		parallel transformers.	ion Delays	

CHAPTER - 3

HARDWARE DESCRIPTION

3.1 Introduction:

In this chapter the block diagram of the project and design aspect of independent modules are considered. Block diagram is shown in fig: 3.1.1:

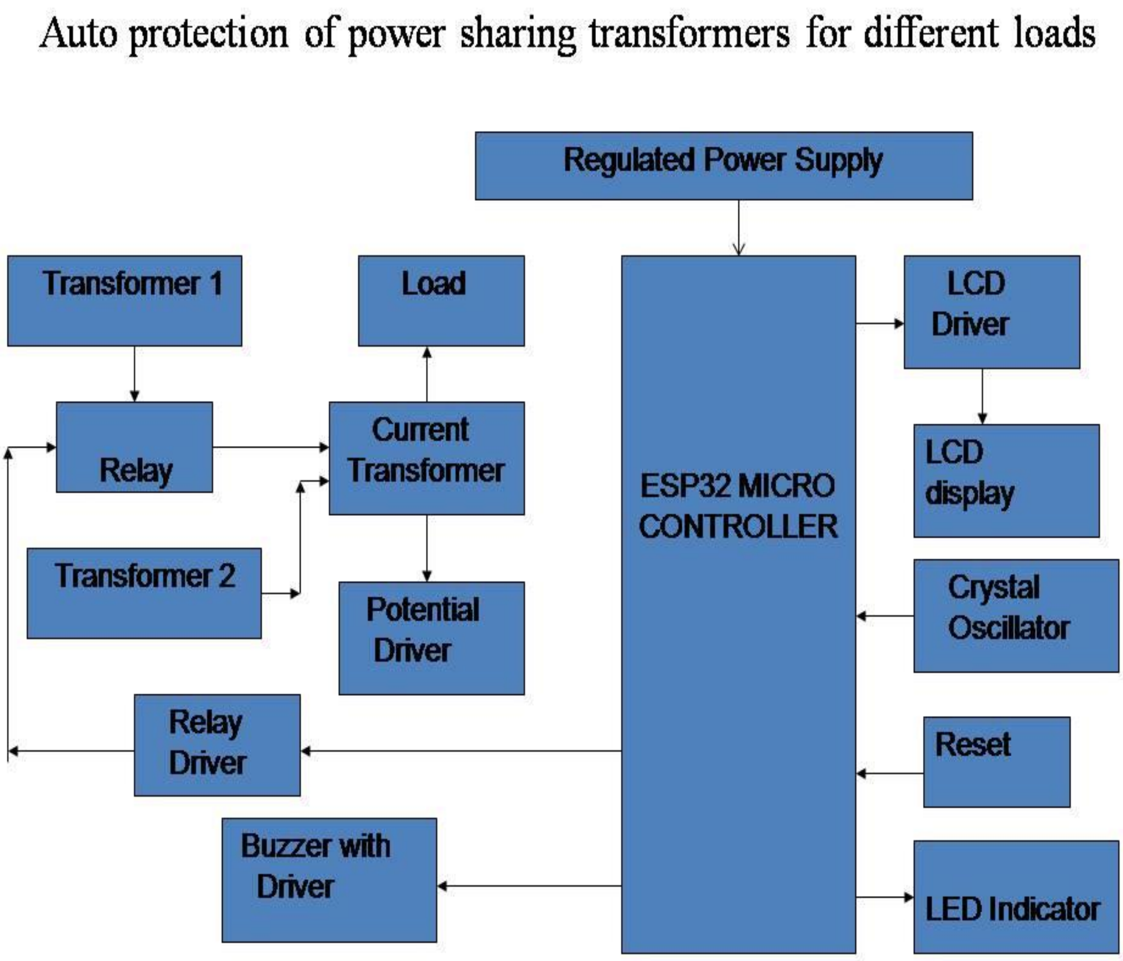

FIG 3.1.1: Block diagram of Auto protection of power sharing transformers for different loads

The main blocks of this project are:

1. Regulated power supply.
2. ESP32 Micro controller.
3. Voltage Transformers.
4. Current transformer.
5. LCD driver circuit.

6. Buzzer with driver.
7. LCD Display.
8. Electromagnetic Relay.
9. Reset.

3.2 Micro controller:

ESP32-WROOM-32 is a powerful, generic Wi-Fi+BT+BLE MCU module that targets a wide variety of applications, ranging from low-power sensor networks to the most demanding tasks, such as voice encoding, music streaming and MP3 decoding.

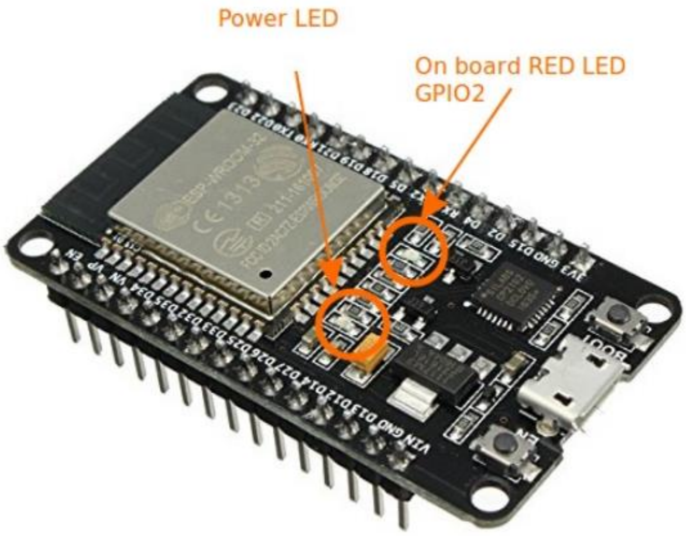

FIG 3.2.1: ESP3

At the core of this module is the ESP32-D0WDQ6 chip*. The chip embedded is designed to be scalable and adaptive. There are two CPU cores that can be individually controlled, and the CPU clock frequency is adjustable from 80 MHz to 240 MHz. The user may also power off the CPU and make use of the low-power co-processor to constantly monitor the peripherals for changes or crossing of thresholds. ESP32 integrates a rich set of peripherals, ranging from capacitive touch sensors, Hall sensors, SD card interface, Ethernet, high-speed SPI, UART, I2S and I2C.

The integration of Bluetooth, Bluetooth LE and Wi-Fi ensures that a wide range of applications can be targeted, and that the module is future proof: using Wi-Fi allows a large physical range and direct connection to the internet through a Wi-Fi router, while using Bluetooth allows the user to conveniently connect to the phone or broadcast low energy beacons for its detection. The sleep current of the ESP32 chip is less than 5 µA, making it suitable for battery powered and wearable electronics applications. ESP32 supports a data rate of up to 150 Mbps, and 20.5 dBm output power at the antenna to ensure the widest physical range. As such the chip does offer industry-leading specifications and the best performance for electronic integration, range, power consumption, and connectivity. The operating system chosen for ESP32 is freeRTOS with LwIP; TLS 1.2 with hardware acceleration is built in as well. Secure (encrypted) over the air (OTA) upgrade is also supported, so that developers can continually upgrade their products even after their release.

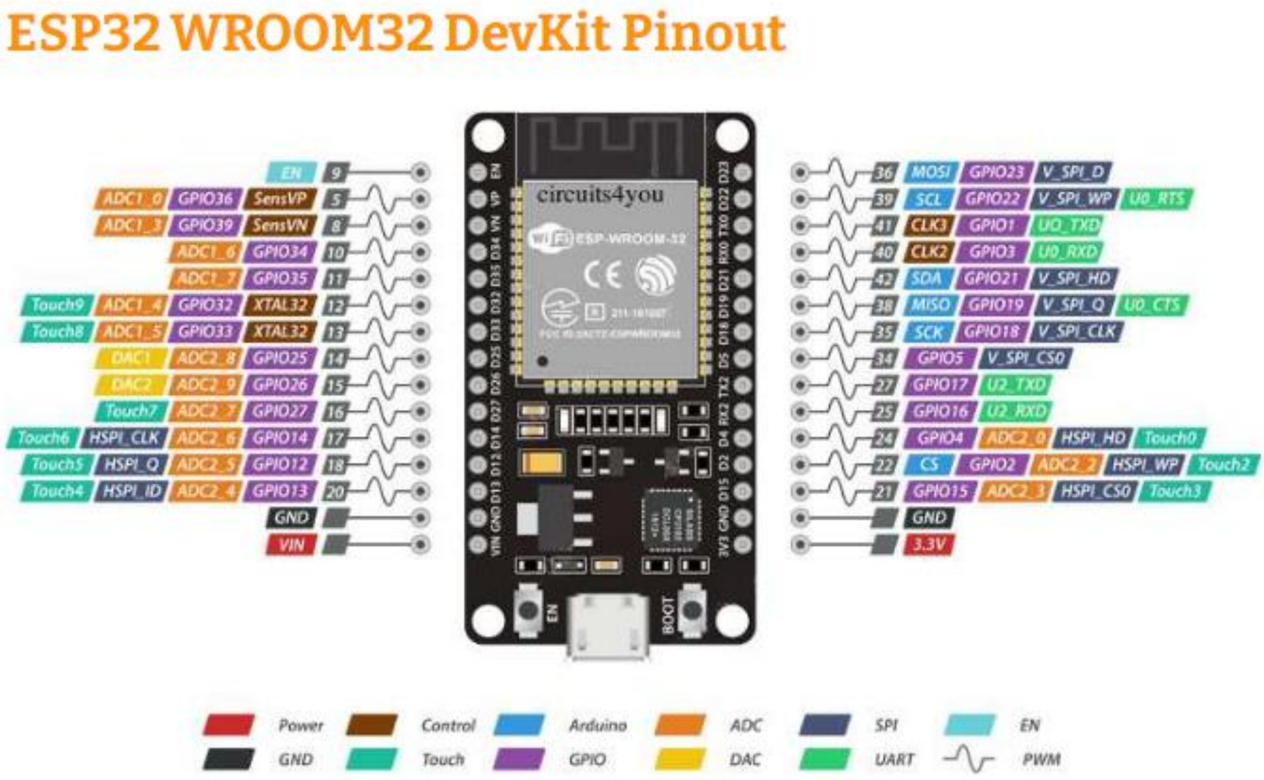

FIG 3.2.2: ESP32 WROOM32 DevKit Pinout

ESP32 Peripherals Features

- 18 Analog-to-Digital Converter (ADC) channels
- 10 Capacitive sensing GPIOs
- 3 UART interfaces
- 3 SPI interfaces
- 2 I2C interfaces
- 16 PWM output channels
- 2 Digital-to-Analog Converters (DAC)
- 2 I2S interfaces

GPIO Pins

ESP32 Wroom32 DevKit has total 25 GPIOs out of that few pins are Input only Pins,

Input Only Pins

- GPIO 34
- GPIO 35
- GPIO 36
- GPIO 39

Not all pins have input pull up, you need external pull up on these pins when using as input pull up.

Pins with internal pull up INPUT_PULLUP

- GPIO14
- GPIO16
- GPIO17
- GPIO18
- GPIO19
- GPIO21
- GPIO22
- GPIO23

Pins without internal pull up

- GPIO13
- GPIO25
- GPIO26
- GPIO27
- GPIO32
- GPIO33

In arduino to use these pins you can simply use common commands

Example: To make GPIO22 as input and GPIO23 as output

pinMode(22,INPUT_PULLUP);

pinMode(23,OUTPUT);

digitalWrite(23,HIGH);

Analog Input Pins

Note that only a subset of ADC pins and functions are exposed. First, the supplied drivers expose only ADC1. The board layout of the ESP32-DevKitC only exposes some of the pins. Specifically, the following are exposed**:** ADC1_CH0 , ADC1_CH3 , ADC1_CH4 , ADC1_CH5 , ADC1_CH6 and ADC1_CH7 **.**

Analog to digital conversion is the ability to read a voltage level found on a pin between 0 and some maximum value and convert that analog value into a digital representation. Varying the voltage applied to the pin will change the value read. The ESP32 has an analog to digital converter built into it with a **resolution of up to 12 bits which is 4096** distinct values. What that means is that 0 volts will produce a digital value of 0 while the maximum voltage will produce a **digital value of 4095** and voltage ranges between these will produce a correspondingly.

One of the properties on the analog to digital converter channels is attenuation. This is a voltage scaling factor. Normally the **input range is 0-1V** but with different attenuations we can scale the input voltage into this range. The available scales beyond the 0-1V include 0-1.34V, 0-2V and 0-3.6V.

Capacitive touch GPIOs

ESP32 Capacitive Touch Example Code

The ESP32 has 10 internal capacitive touch sensors. These can sense variations in anything that holds an electrical charge, like the human skin. So they can detect variations induced when touching the GPIOs with a finger. These pins can be easily integrated into capacitive pads, and replace mechanical buttons. The capacitive touch pins can also be used to wake up the ESP32 from deep sleep.

Those internal touch sensors are connected to these GPIOs:

- T0 (GPIO 4)
- T1 (GPIO 0)
- T2 (GPIO 2)
- T3 (GPIO 15)
- T4 (GPIO 13)
- T5 (GPIO 12)
- T6 (GPIO 14)
- T7 (GPIO 27)
- T8 (GPIO 33)
- T9 (GPIO 32)

Digital to Analog Converter (DAC)

There are 2 x 8 bits DAC channels on the ESP32 to convert digital signals into analog voltage signal outputs. These are the DAC channels:

- DAC1 (GPIO25)
- DAC2 (GPIO26)

RTC GPIOs

There is RTC GPIO support on the ESP32. The GPIOs routed to the RTC low-power subsystem can be used when the ESP32 is in deep sleep. These RTC GPIOs can be used to wake up the ESP32 from deep sleep when the Ultra Low Power (ULP) co-processor is running. The following GPIOs can be used as an external wake up source.

- RTC_GPIO0 (GPIO36)
- RTC_GPIO3 (GPIO39)
- RTC_GPIO4 (GPIO34)
- RTC_GPIO5 (GPIO35)

- RTC_GPIO6 (GPIO25)
- RTC_GPIO7 (GPIO26)
- RTC_GPIO8 (GPIO33)
- RTC_GPIO9 (GPIO32)
- RTC_GPIO10 (GPIO4)
- RTC_GPIO11 (GPIO0)
- RTC_GPIO12 (GPIO2)
- RTC_GPIO13 (GPIO15)
- RTC_GPIO14 (GPIO13)
- RTC_GPIO15 (GPIO12)
- RTC_GPIO16 (GPIO14)
- RTC_GPIO17 (GPIO27)

PWM

The ESP32 LED PWM controller has 16 independent channels that can be configured to generate PWM signals with different properties. All pins that can act as outputs can be used as PWM pins (Input only pin GPIOs 34 to 39 can't generate PWM).

To set a PWM signal, you need to define these parameters in the code:

- Signal's frequency;
- Duty cycle;
- PWM channel;
- GPIO where you want to output the signal.

Serial

ESP32 has three serial ports

First Serial RX0, TX0 is used for programming,

- **GPIO3 (U0RXD)**
- **GPIO1(U0TXD)**

Another Serial port is available on

- **GPIO16 (U2RXD).**
- **GIIO17 (U2TXD).**

When programming it is named as Serial2.

I2C

When using the ESP32 with the Arduino IDE, you should use the ESP32 I2C default pins (supported by the Wire library):

- GPIO 21 (SDA)
- GPIO 22 (SCL)

SPI

By default, the pin mapping for SPI is:

SPI	MOSI	MISO	CLK	CS
VSPI	GPIO 23	GPIO 19	GPIO 18	GPIO 5
HSPI	GPIO 13	GPIO 12	GPIO 14	GPIO 15

Interrupts

All GPIOs can be configured as interrupts.

Enable (EN)

Enable (EN) is the 3.3V regulator's enable pin. It's pulled up, so connect to ground to disable the 3.3V regulator. This means that you can use this pin connected to a pushbutton to restart your ESP32.

GPIO current drawn

The absolute maximum current drawn per GPIO is source 40Ma and sink 28mAmp according to the "Recommended Operating Conditions" section in the ESP32 datasheet.

3.3 REGULATED POWER SUPPLY:

3.3.1 Introduction:

Power supply is a supply of electrical power. A device or system that supplies electrical or other types of energy to an output load or group of loads is called a power supply unit or PSU. The term is most commonly applied to electrical energy supplies, less often to mechanical ones, and rarely to others.A power supply may include a power distribution system as well as primary or secondary sources of energy such as

- Conversion of one form of electrical power to another desired form and voltage, typically involving converting AC line voltage to a well-regulated lower-voltage DC for electronic devices. Low voltage, low power DC power supply units are commonly integrated with the devices they supply, such as computers and household electronics.
- Batteries.
- Chemical fuel cells and other forms of energy storage systems.
- Solar power.
- Generators or alternators.

3.3.2 Block Diagram:

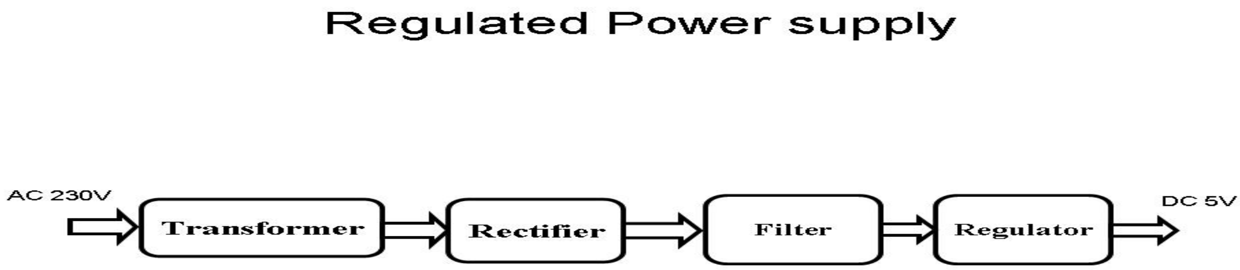

Fig 3.3.1 Regulated Power Supply

The basic circuit diagram of a regulated power supply (DC O/P) with led connected as load is shown in fig: 3.3.2.

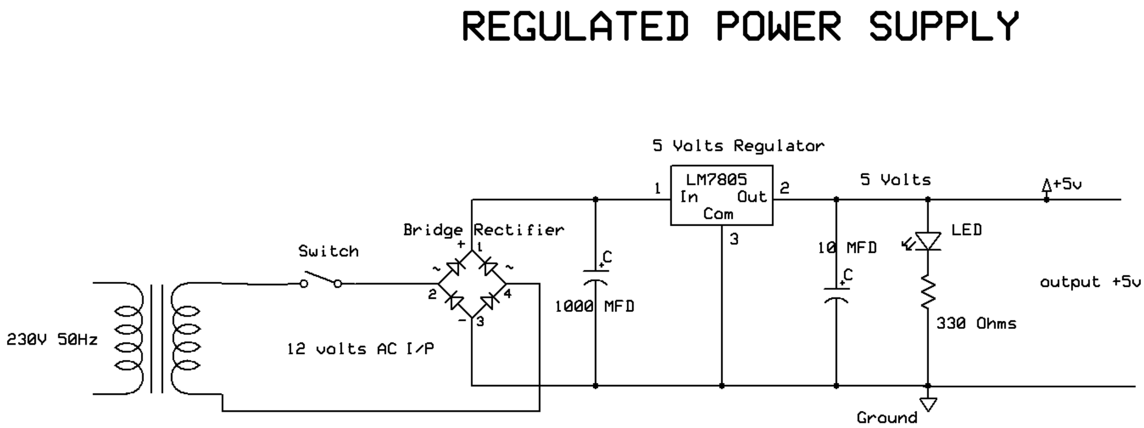

Fig 3.3.2 Circuit diagram of Regulated Power Supply with Led connection

The components mainly used in above figure are

- 230V AC MAINS
- TRANSFORMER
- BRIDGE RECTIFIER(DIODES)
- CAPACITOR
- VOLTAGE REGULATOR(IC 7805)
- RESISTOR
- LED(LIGHT EMITTING DIODE)

The detailed explanation of each and every component mentioned above is as follows:

Transformation: The process of transforming energy from one device to another is called transformation. For transforming energy we use transformers.

3.3.3 Transformers:

A transformer is a device that transfers electrical energy from one circuit to another through inductively coupled conductors without changing its frequency. A varying current in the first or primary winding creates a varying magnetic flux in the transformer's core, and thus a varying magnetic field through the secondary winding. This varying magnetic field induces a varying electromotive force (EMF) or "voltage" in the secondary winding. This effect is called mutual induction.If a load is connected to the secondary, an electric current will flow in the secondary winding and electrical energy will be transferred from the primary circuit through the transformer to the load. This field is made up from lines of force and has the same shape as a bar magnet. If the current is increased, the lines of force move outwards from the coil. If the current is reduced, the lines of force move inwards.

If another coil is placed adjacent to the first coil then, as the field moves out or in, the moving lines of force will "cut" the turns of the second coil. As it does this, a voltage is induced in the second coil. With the 50 Hz AC mains supply, this will happen 50 times a second. This is called MUTUAL INDUCTION and forms the basis of the transformer.

The input coil is called the PRIMARY WINDING; the output coil is the SECONDARY WINDING. Fig: 3.3.3 shows step-down transformer.

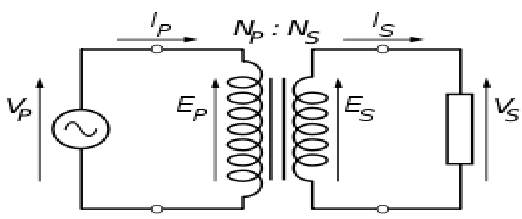

$$\frac{V_P}{V_S} = \frac{I_S}{I_P} = \frac{N_P}{N_S}$$

Fig 3.3.3: Step-Down Transformer

The voltage induced in the secondary is determined by the TURNS RATIO.

$$\frac{\text{primary voltage}}{\text{secondary voltage}} = \frac{\text{number of primary turns}}{\text{number of secondary turns}}$$

For example, if the secondary has half the primary turns; the secondary will have half the primary voltage. Another example is if the primary has 5000 turns and the secondary has 500 turns, then the turn's ratio is 10:1. If the primary voltage is 240 volts then the secondary voltage will be x 10 smaller = 24 volts. Assuming a perfect transformer, the power provided by the primary must equal the power taken by a load on the secondary. If a 24-watt lamp is connected across a 24 volt secondary, then the primary must supply 24 watts.To aid magnetic coupling between primary and secondary, the coils are wound on a metal CORE. Since the primary would induce power, called EDDY CURRENTS, into this core, the core is LAMINATED. This means that it is made up from metal sheets insulated from each other. Transformers to work at higher frequencies have an iron dust core or no core at all.

Note that the transformer only works on AC, which has a constantly changing current and moving field. DC has a steady current and therefore a steady field and there would be no induction. Some transformers have an electrostatic screen between primary and secondary. This is to prevent some types of interference being fed from the equipment down into the mains supply, or in the other direction. Transformers are sometimes used for IMPEDANCE MATCHING.

We can use the transformers as step up or step down.

3.3.4 Step Up transformer:

In case of step up transformer, primary windings are every less compared to secondary winding. Because of having more turns secondary winding accepts more energy, and it releases more voltage at the output side.

3.3.5 Step down transformer:

Incase of step down transformer, Primary winding induces more flux than the secondary winding, and secondary winding is having less number of turns because of that it accepts less number of flux, and releases less amount of voltage.

RECTIFICATION:

The process of converting an alternating current to a pulsating direct current is called as rectification. For rectification purpose we use rectifiers.

3.3.6 Rectifiers:

A rectifier is an electrical device that converts alternating current (AC) to direct current (DC), a process known as rectification. Rectifiers have many uses including as components of power supplies and as detectors of radio signals. Rectifiers may be made of solid-state diodes, vacuum tube diodes, mercury arc valves, and other components.A device that it can perform the opposite function (converting DC to AC) is known as an inverter.

When only one diode is used to rectify AC (by blocking the negative or positive portion of the waveform), the difference between the term diode and the term rectifier is merely one of usage, i.e., the term rectifier describes a diode that is being used to convert AC to DC. Almost all rectifiers comprise a number of diodes in a specific arrangement for more efficiently converting

AC to DC than is possible with only one diode. Before the development of silicon semiconductor rectifiers, vacuum tube diodes and copper (I) oxide or selenium rectifier stacks were used.

3.3.7 Bridge full wave rectifier:

The Bridge rectifier circuit is shown in fig: 3.3.4, which converts an ac voltage to dc voltage using both half cycles of the input ac voltage. The Bridge rectifier circuit is shown in the figure. The circuit has four diodes connected to form a bridge. The ac input voltage is applied to the diagonally opposite ends of the bridge. The load resistance is connected between the other two ends of the bridge. For the positive half cycle of the input ac voltage, diodes D1 and D3 conduct, whereas diodes D2 and D4 remain in the OFF state. The conducting diodes will be in series with the load resistance R_L and hence the load current flows through $R_{L.}$ For the negative half cycle of the input ac voltage, diodes D2 and D4 conduct whereas, D1 and D3 remain OFF. The conducting diodes D2 and D4 will be in series with the load resistance R_L and hence the current flows through R_L in the same direction as in the previous half cycle. Thus a bi-directional wave is converted into a unidirectional wave.

Input Output

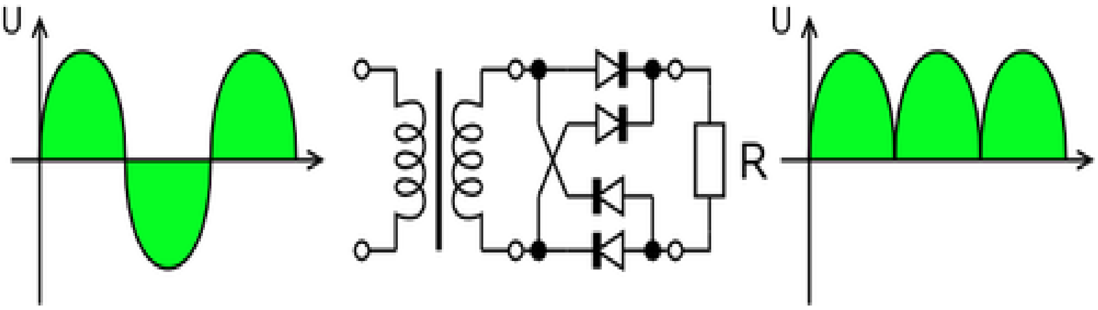

Fig 3.3.4: Bridge rectifier: a full-wave rectifier using 4 diodes

DB107:

Now -a -days Bridge rectifier is available in IC with a number of DB107. In our project we are using an IC in place of bridge rectifier. The picture of DB 107 is shown in fig: 3.3.5.

Features:

- Good for automation insertion
- Surge overload rating - 30 amperes peak
- Ideal for printed circuit board
- Reliable low cost construction utilizing molded
- Glass passivated device

- Polarity symbols molded on body
- Mounting position: Any
- Weight: 1.0 gram

Fig 3.3.5: DB107

Filtration:

The process of converting a pulsating direct current to a pure direct current using filters is called as filtration.

3.3.8 Introduction to Capacitors:

The Capacitor or sometimes referred to as a Condenser is a passive device, and one which stores energy in the form of an electrostatic field which produces a potential (static voltage) across its plates. In its basic form a capacitor consists of two parallel conductive plates that are not connected but are electrically separated either by air or by an insulating material called the Dielectric. When a voltage is applied to these plates, a current flows charging up the plates with electrons giving one plate a positive charge and the other plate an equal and opposite negative charge this flow of electrons to the plates is known as the Charging Current and continues to flow until the voltage across the plates (and hence the capacitor) is equal to the applied voltage Vcc. At this point the capacitor is said to be fully charged and this is illustrated below. The construction of capacitor and an electrolytic capacitor are shown in figures 3.3.6 and 3.3.7 respectively.

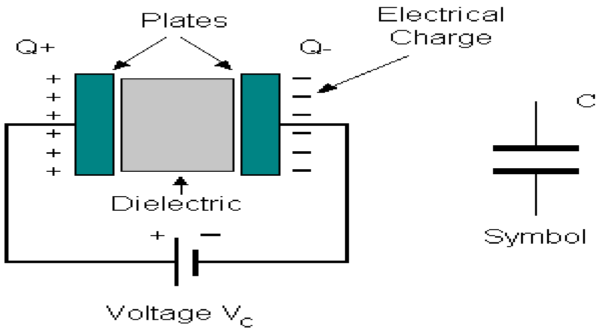

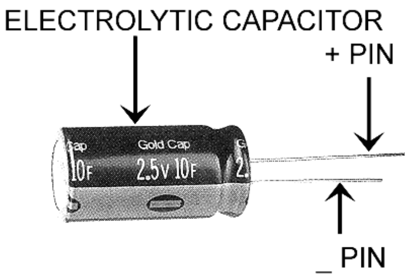

Fig 3.3.6:Construction Of a Capacitor **Fig 3.3.7:Electrolytic Capaticor**

Units of Capacitance:

Microfarad (μF) 1μF = 1/1,000,000 = 0.000001 = 10^{-6} F

Nanofarad (nF) 1nF = 1/1,000,000,000 = 0.000000001 = 10^{-9} F

Pico farad (pF) 1pF = 1/1,000,000,000,000 = 0.000000000001 = 10^{-12} F

Operation of Capacitor:

Think of water flowing through a pipe. If we imagine a capacitor as being a storage tank with an inlet and an outlet pipe, it is possible to show approximately how an electronic capacitor works.

First, let's consider the case of a "coupling capacitor" where the capacitor is used to connect a signal from one part of a circuit to another but without allowing any direct current to flow.

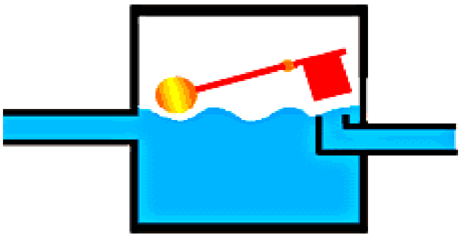

If the current flow is alternating between zero and a maximum, our "storage tank" capacitor will allow the current waves to pass through.

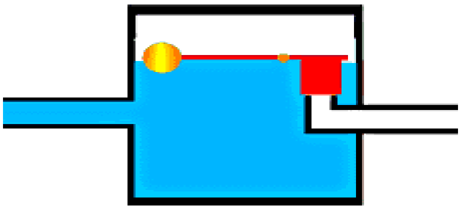

However, if there is a steady current, only the initial short burst will flow until the "floating ball valve" closes and stops further flow.

So a coupling capacitor allows "alternating current" to pass through because the ball valve doesn't get a chance to close as the waves go up and down. However, a steady current quickly fills the tank so that all flow stops. A capacitor will pass alternating current but (apart from an initial surge) it will not pass d.c.

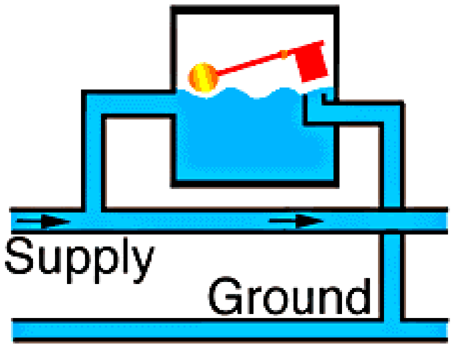

Where a capacitor is used to decouple a circuit, the effect is to "smooth out ripples". Any ripples, waves or pulses of current are passed to ground while d.c. Flows smoothly.

Regulation:

The process of converting a varying voltage to a constant regulated voltage is called as regulation. For the process of regulation we use voltage regulators.

3.3.9 Voltage Regulator:

A voltage regulator (also called a ‘regulator’) with only three terminals appears to be a simple device, but it is in fact a very complex integrated circuit. It converts a varying input voltage into a constant ‘regulated’ output voltage. Voltage Regulators are available in a variety of outputs like 5V, 6V, 9V, 12V and 15V. The LM78XX series of voltage regulators are designed for positive input. For applications requiring negative input, the LM79XX series is used. Using a pair of ‘voltage-divider’ resistors can increase the output voltage of a regulator circuit.

It is not possible to obtain a voltage lower than the stated rating. You cannot use a 12V regulator to make a 5V power supply. Voltage regulators are very robust. These can withstand over-current draw due to short circuits and also over-heating. In both cases, the regulator will cut off before any damage occurs. The only way to destroy a regulator is to apply reverse voltage to its input. Reverse polarity destroys the regulator almost instantly. Fig: 3.3.8 shows voltage regulator.

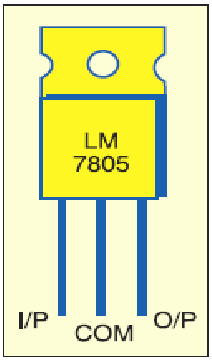

Fig 3.3.8: Voltage Regulator

3.3.10 Resistors:

A resistor is a two-terminal electronic component that produces a voltage across its terminals that is proportional to the electric current passing through it in accordance with Ohm's law:

$V = IR$

Resistors are elements of electrical networks and electronic circuits and are ubiquitous in most electronic equipment. Practical resistors can be made of various compounds and films, as well as resistance wire (wire made of a high-resistivity alloy, such as nickel/chrome).The primary characteristics of a resistor are the resistance, the tolerance, maximum working voltage and the power rating. Other characteristics include temperature coefficient, noise, and inductance. Less well-known is critical resistance, the value below which power dissipation limits the maximum permitted current flow, and above which the limit is applied voltage

Theory of operation:

Ohm's law:

The behaviour of an ideal resistor is dictated by the relationship specified in Ohm's law:

$$V = IR$$

Ohm's law states that the voltage (V) across a resistor is proportional to the current (I) through it where the constant of proportionality is the resistance (R).

Power dissipation:

The power dissipated by a resistor (or the equivalent resistance of a resistor network) is calculated using the following:

$$P = I^2R = IV = \frac{V^2}{R}$$

Fig 3.3.9: Resistor

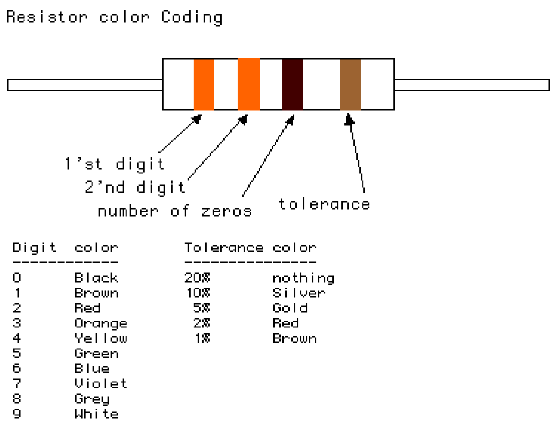

Fig 3.3.10: Colour Bands In Resistor

3.4. LED:

A light-emitting diode (LED) is a semiconductor light source. LEDs are used as indicator lamps in many devices, and are increasingly used for lighting. Introduced as a practical electronic component in 1962, early LEDs emitted low-intensity red light, but modern versions are available across the visible, ultraviolet and infrared wavelengths, with very high brightness. The internal structure and parts of a led are shown in figures 3.4.1 and 3.4.2 respectively.

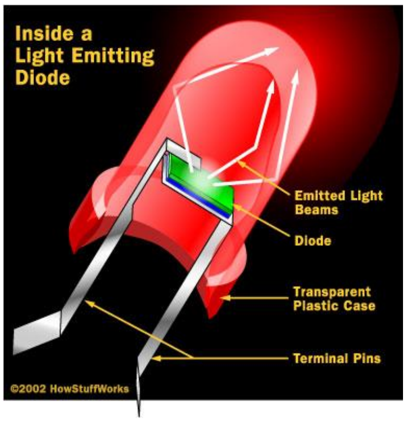

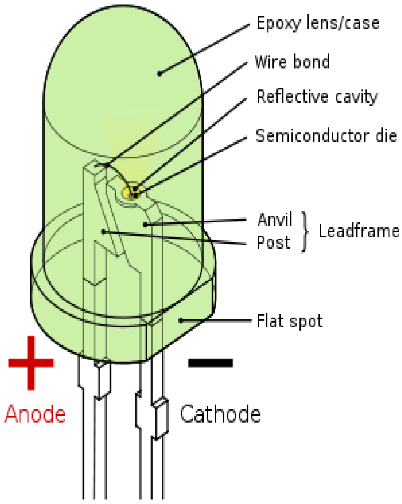

Fig 3.4.1: Inside a LED

Fig 3.4.2: Parts of a LED

Working:

The structure of the LED light is completely different than that of the light bulb. Amazingly, the LED has a simple and strong structure. The light-emitting semiconductor material is what determines the LED's colour. The LED is based on the semiconductor diode.

When a diode is forward biased (switched on), electrons are able to recombine with holes within the device, releasing energy in the form of photons. This effect is called electroluminescence and the colour of the light (corresponding to the energy of the photon) is determined by the energy gap of the semiconductor. An LED is usually small in area (less than 1 mm^2), and integrated optical components are used to shape its radiation pattern and assist in reflection. LED’s present many advantages over incandescent light sources including lower energy consumption, longer lifetime, improved robustness, smaller size, faster switching, and greater durability and reliability. However, they are relatively expensive and require more precise current and heat management than traditional light sources. Current LED products for general lighting are more expensive to buy than fluorescent lamp sources of comparable output. They also enjoy use in applications as diverse as replacements for traditional light sources in automotive lighting (particularly indicators) and in traffic signals. The compact size of LED’s has allowed new text and video displays and sensors to be developed, while their high switching rates are useful in advanced communications technology. The electrical symbol and polarities of led are shown in fig: 3.4.3.

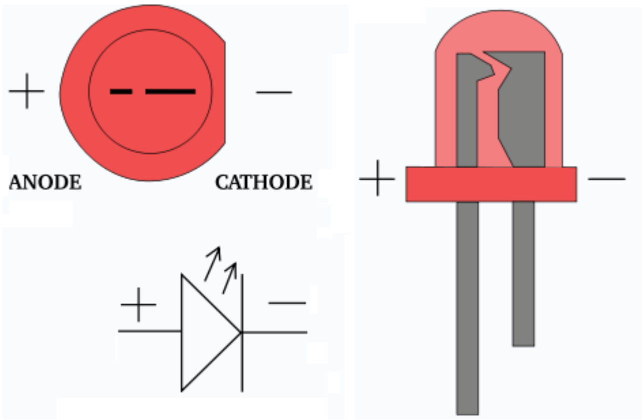

Fig 3.4.3: Electrical Symbol & Polarities of LED

LED lights have a variety of advantages over other light sources:

- High-levels of brightness and intensity
- High-efficiency
- Low-voltage and current requirements
- Low radiated heat
- High reliability (resistant to shock and vibration)
- No UV Rays
- Long source life
- Can be easily controlled and programmed

Applications of LED fall into three major categories:

- Visual signal application where the light goes more or less directly from the LED to the human eye, to convey a message or meaning.
- Illumination where LED light is reflected from object to give visual response of these objects.
- Generate light for measuring and interacting with processes that do not involve the human visual system.

3.5 Current Transformer:

In electrical engineering, a current transformer (CT) is used for measurement of electric currents. Current transformers, together with potential transformers (PT), are known as instrument transformers. When current in a circuit is too high to directly apply to measuring instruments, a current transformer produces a reduced current accurately proportional to the current in the circuit, which can be conveniently connected to measuring and recording instruments. A current transformer also isolates the measuring instruments from what may be very high voltage in the monitored circuit. Current transformers are commonly used in metering and protective relays in the electrical power industry.

3.5.1 Design

Like any other transformer, a current transformer has a primary winding, a magnetic core, and a secondary winding. The alternating current flowing in the primary produces a magnetic field in the core, which then induces current flow in the secondary winding circuit. A primary objective of current transformer design is to ensure that the primary and secondary circuits are efficiently coupled, so that the secondary current bears an accurate relationship to the primary current.

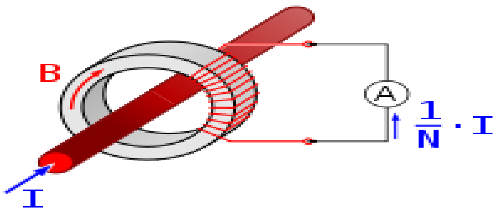

Fig.3.5.1 Current Transformer Principle

The most common design of CT consists of a length of wire wrapped many times around a silicon steel ring passed over the circuit being measured. The CT's primary circuit therefore consists of a single 'turn' of conductor, with a secondary of many hundreds of turns. The primary winding may be a permanent part of the current transformer, with a heavy copper bar to carry current through the magnetic core. Window-type current transformers are also common, which can have circuit cables run through the middle of an opening in the core to provide a single-turn primary winding. When conductors passing through a CT are not centered in the circular (or oval) opening, slight inaccuracies may occur. Current transformers used in metering equipment for three-phase 400 ampere electricity supply.Shapes and sizes can vary depending on the end user or switchgear manufacturer. Typical examples of low voltage single ratio metering current transformers are either ring type or plastic moulded case. High-voltage current transformers are mounted on porcelain bushings to insulate them from ground. Some CT configurations slip around the bushing of a high-voltage transformer or circuit breaker, which automatically centers the conductor inside the CT window.The primary circuit is largely unaffected by the insertion of the CT. The rated secondary current is commonly standardized at 1 or 5 amperes. For example, a 4000:5 CT would provide an output current of 5 amperes when the primary was passing 4000 amperes. The secondary winding can be single ratio or multi ratio, with five taps being common for multi ratio CTs. The load, or burden, of the CT should be of low resistance. If the voltage time integral area is higher than the core's design rating, the core goes into saturation towards the end of each cycle, distorting the waveform and affecting accuracy.

3.5.2 Usage:

Current transformers are used extensively for measuring current and monitoring the operation of the power grid. Along with voltage leads, revenue-grade CTs drive the electrical utility's watt-hour meter on virtually every building with three-phase service, and every residence with greater than 200 amp service.The CT is typically described by its current ratio from primary to secondary. Often, multiple CTs are installed as a "stack" for various uses. For example, protection devices and revenue metering may use separate CTs; stacking them provides severability while consolidating the high voltage interface. Similarly, potential transformers such as the CVT are used for measuring voltage and monitoring the operation of the power grid.

3.5.3 Safety precautions:

Care must be taken that the secondary of a current transformer is not disconnected from its load while current is flowing in the primary, as the transformer secondary will attempt to continue driving current across the effectively infinite impedance. This will produce a high voltage across the open secondary (into the range of several kilovolts in some cases), which may cause arcing. The high voltage produced will compromise operator and equipment safety and permanently affect the accuracy of the transformer.

3.5.4 Accuracy:

The accuracy of a CT is directly related to a number of factors including:

- Burden
- Burden class/saturation class
- Rating factor
- Load
- External electromagnetic fields
- Temperature and
- Physical configuration.
- The selected tap, for multi-ratio CT's

3.5.5 Burden:

The load, or burden, in a CT metering circuit is the (largely resistive) impedance presented to its secondary winding. Typical burden ratings for IEC CTs are 1.5VA, 3VA, 5VA, 10VA, 15VA, 20VA, 30VA, 45VA & 60VA with ANSI/IEEE B-0.1, B-0.2, B-0.5, B-1.0, B-2.0 and B-4.0. This means a CT with a burden rating of B-0.2 can tolerate up to 0.2 Ω of impedance in the metering circuit before its output current is no longer a fixed ratio to the primary current. Items that contribute to the burden of a current measurement circuit are switch-blocks, meters and intermediate conductors. The most common source of excess burden in a current measurement circuit is the conductor between the meter and the CT. Often, substation meters are located significant distances from the meter cabinets and the excessive length of small gauge conductor creates a large resistance. This problem can be solved by using CT with 1 ampere secondaries which will produce less voltage drop between a CT and its metering devices (used for remote measurement).

3.5.6 Rating factor:

Rating factor is a factor by which the nominal full load current of a CT can be multiplied to determine its absolute maximum measurable primary current. Conversely, the minimum primary current a CT can accurately measure is "light load," or 10% of the nominal current (there are, however, special CTs designed to measure accurately currents as small as 2% of the nominal current). The rating factor of a CT is largely dependent upon ambient temperature. Most CTs have rating factors for 35 degrees Celsius and 55 degrees Celsius. It is important to be mindful of ambient temperatures and resultant rating factors when CTs are installed inside pad-mounted transformers or poorly ventilated mechanical rooms. Recently, manufacturers have been moving towards lower nominal primary currents with greater rating factors. This is made possible by the development of more efficient ferrites and their corresponding hysteresis curves. This is a distinct advantage over previous CTs because it increases their range of accuracy, since the CTs are most accurate between their rated current and rating factor.

3.5.7 Special designs:

Specially constructed wideband current transformers are also used (usually with an oscilloscope) to measure waveforms of high frequency or pulsed currents within pulsed power systems. One type of specially constructed wideband transformer provides a voltage output that is proportional to the measured current. Another type (called a Rogowski coil) requires an external integrator in order to provide a voltage output that is proportional to the measured current. Unlike CTs used for power circuitry, wideband CTs are rated in output volts per ampere of primary current.

3.6 Relay:

A relay is an electrically operated switch. Many relays use an electromagnet to operate a switching mechanism, but other operating principles are also used. Relays find applications where it is necessary to control a circuit by a low-power signal, or where several circuits must be controlled by one signal. The first relays were used in long distance telegraph circuits, repeating the signal coming in from one circuit and re-transmitting it to another. Relays found extensive use in telephone exchanges and early computers to perform logical operations. A type of relay that can handle the high power required to directly drive an electric motor is called a contactor. Solid-state relays control power circuits with no moving parts, instead using a semiconductor device triggered by light to perform switching. Relays with calibrated operating characteristics and sometimes multiple operating coils are used to protect electrical circuits from overload or faults; in modern electric power systems these functions are performed by digital instruments still called "protection relays".

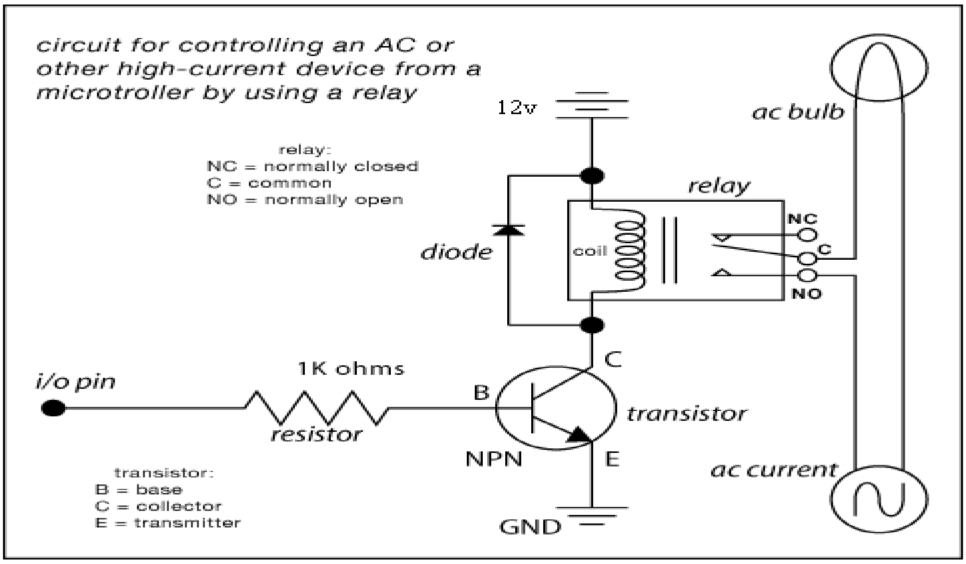

3.6.1. Simple electromechanical relay:

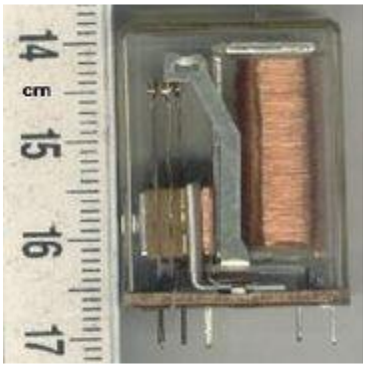

Fig 3.6.1: Simple electromechanical relay

A simple electromagnetic relay, such as the one taken from a car in the first picture, is an adaptation of an electromagnet. It consists of a coil of wire surrounding a soft iron core, an iron yoke, which provides a low reluctance path for magnetic flux, a movable iron armature, and a set, or sets, of contacts; two in the relay pictured. The armature is hinged to the yoke and mechanically linked to a moving contact or contacts. It is held in place by a spring so that when the relay is de-energized there is an air gap in the magnetic circuit. In this condition, one of the two sets of contacts in the relay pictured is closed, and the other set is open. Other relays may have more or fewer sets of contacts depending on their function. The relay in the picture also has a wire connecting the armature to the yoke. This ensures continuity of the circuit between the moving contacts on the armature, and the circuit track on the printed circuit board (PCB) via the yoke, which is soldered to the PCB.

Basic design and operation:

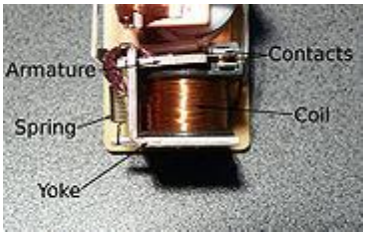

Fig 3.6.2: Basic design and operation

When an electric current is passed through the coil, the resulting magnetic field attracts the armature and the consequent movement of the movable contact or contacts either makes or breaks a connection with a fixed contact. If the set of contacts was closed when the relay was De-energized, then the movement opens the contacts and breaks the connection, and vice versa if the contacts were open. When the current to the coil is switched off, the armature is returned by a force, approximately half as strong as the magnetic force, to its relaxed position. Usually this force is provided by a spring, but gravity is also used commonly in industrial motor starters. Most relays are manufactured to operate quickly. In a low voltage application, this is to reduce noise. In a high voltage or high current application, this is to reduce arcing.If the coil is energized with DC, a diode is frequently installed across the coil, to dissipate the energy from the collapsing magnetic field at deactivation, which would otherwise generate a voltage spike dangerous to circuit components. Some automotive relays already include a diode inside the relay case. Alternatively a contact protection network, consisting of a capacitor and resistor in series, may absorb the surge. If the coil is designed to be energized with AC, a small copper ring can be crimped to the end of the solenoid. This "shading ring" creates a small out-of-phase current, which increases the minimum pull on the armature during the AC cycle. By analogy with the functions of the original electromagnetic device, a solid-state relay is made with a thyristor or other solid-state switching device. To achieve electrical isolation an opt coupler can be used which is a light-emitting diode (LED) coupled with a photo transistor. Small relay as used in electronics

Advantages of relays:

- Relays can switch AC and DC, transistors can only switch DC.
- Relays can switch high voltages, transistors cannot.
- Relays are a better choice for switching large currents (> 5A).
- Relays can switch many contacts at once.

Disadvantages of relays:

- Relays are bulkier than transistors for switching small currents.
- Relays cannot switch rapidly (except reed relays), transistors can switch many times per second.
- Relays use more power due to the current flowing through their coil.
- Relays require more current than many ICs can provide, so a low power transistor may be needed to switch the current for the relay's coil.

Relay Driver:

The current needed to operate the relay coil is more than can be supplied by most chips (op. amps etc), so a transistor is usually needed, as shown in the diagram below.

Use BC109C or similar. A resistor of about 4k7 will probably be alright. The diode is needed to short circuit the high voltage “back emf” induced when current flowing through the coil is suddenly switched off.

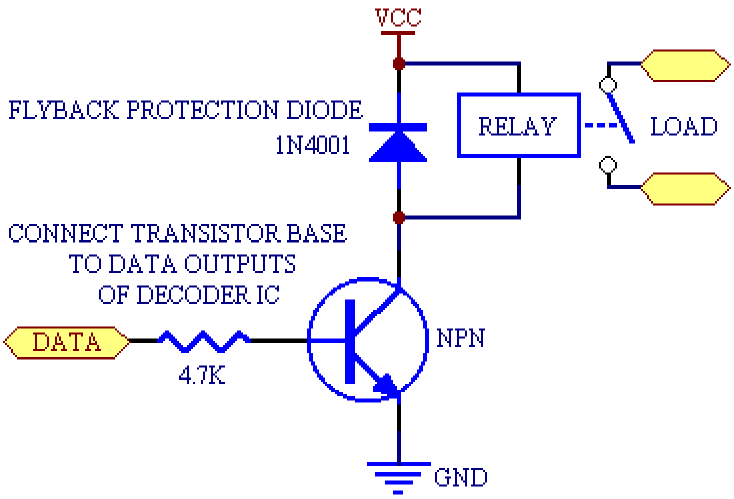

Fig. 3.6.3 Relay Driver

3.7 LCD DISPLAY

LCD Background:

One of the most common devices attached to a micro controller is an LCD display. Some of the most common LCD's connected to the many microcontrollers are 16x2 and 20x2 displays. This means 16 characters per line by 2 lines and 20 characters per line by 2 lines, respectively.

Basic 16x 2 Characters LCD

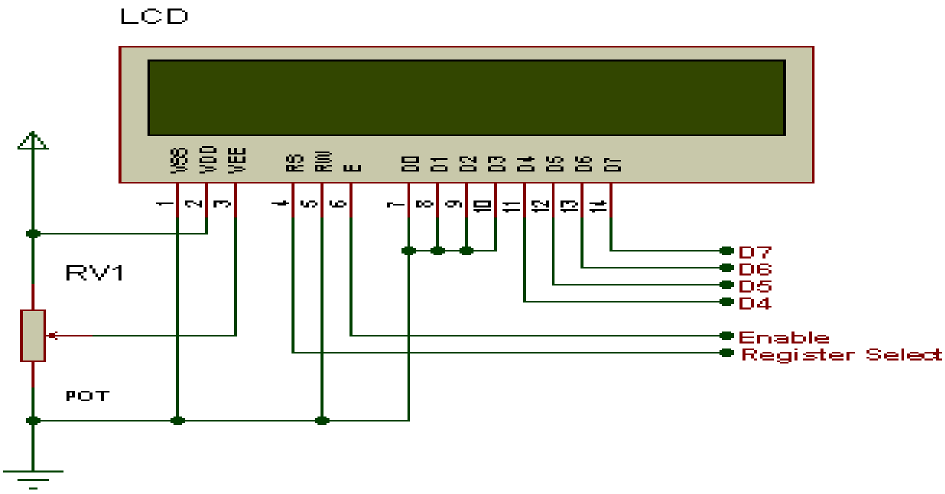

Fig 3.7.1: LCD Pin diagram

Pin description:

Table 3.1: Character LCD pins with Microcontroller

Pin No.	Name	Description
Pin no. 1	**VSS**	Power supply (GND)
Pin no. 2	**VCC**	Power supply (+5V)
Pin no. 3	**VEE**	Contrast adjust
Pin no. 4	**RS**	0 = Instruction input 1 = Data input
Pin no. 5	**R/W**	0 = Write to LCD module 1 = Read from LCD module
Pin no. 6	**EN**	Enable signal
Pin no. 7	**D0**	Data bus line 0 (LSB)
Pin no. 8	**D1**	Data bus line 1
Pin no. 9	**D2**	Data bus line 2
Pin no. 10	**D3**	Data bus line 3
Pin no. 11	**D4**	Data bus line 4

Pin no. 12	**D5**	Data bus line 5
Pin no. 13	**D6**	Data bus line 6
Pin no. 14	**D7**	Data bus line 7 (MSB)

The LCD requires 3 control lines as well as either 4 or 8 I/O lines for the data bus. The user may select whether the LCD is to operate with a 4-bit data bus or an 8-bit data bus. If a 4-bit data bus is used the LCD will require a total of 7 data lines (3 control lines plus the 4 lines for the data bus). If an 8-bit data bus is used the LCD will require a total of 11 data lines (3 control lines plus the 8 lines for the data bus.The three control lines are referred to as EN, RS, and RW.The EN line is called "Enable." This control line is used to tell the LCD that we are sending it data. To send data to the LCD, our program should make sure this line is low (0) and then set the other two control lines and/or put data on the data bus. When the other lines are completely ready, bring EN high (1) and wait for the minimum amount of time required by the LCD datasheet (this varies from LCD to LCD), and end by bringing it low (0) again. The RS line is the "Register Select" line. When RS is low (0), the data is to be treated as a command or special instruction (such as clear screen, position cursor, etc.). When RS is high (1), the data being sent is text data which should be displayed on the screen. For example, to display the letter "T" on the screen we would set RS high.

The RW line is the "Read/Write" control line. When RW is low (0), the information on the data bus is being written to the LCD. When RW is high (1), the program is effectively querying (or reading) the LCD. Only one instruction ("Get LCD status") is a read command. All others are write commands--so RW will almost always be low.Finally, the data bus consists of 4 or 8 lines (depending on the mode of operation selected by the user). In the case of an 8-bit data bus, the lines are referred to as DB0, DB1, DB2, DB3, DB4, DB5, DB6, and DB7.

Schematic:

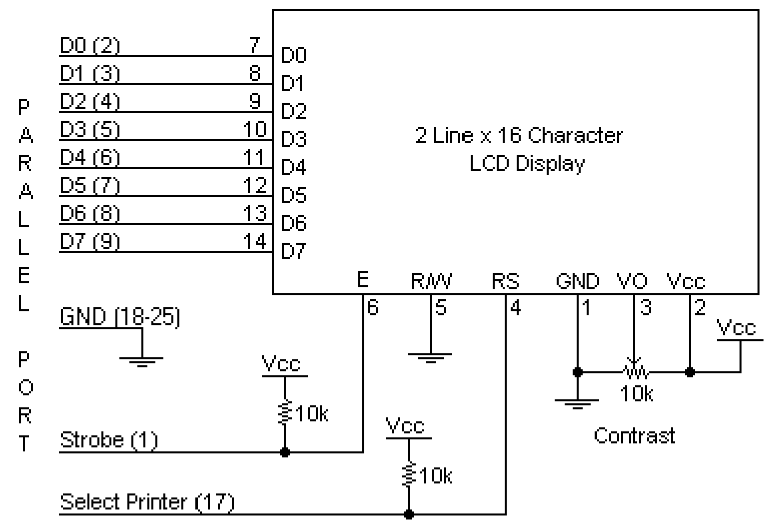

Circuit Description:

Above is the quite simple schematic. The LCD panel's Enable and Register Select is connected to the Control Port. The Control Port is an open collector / open drain output. While most Parallel Ports have internal pull-up resistors, there is a few which don't. Therefore by incorporating the two 10K external pull up resistors, the circuit is more portable for a wider range of computers, some of which may have no internal pull up resistors. We make no effort to place the Data bus into reverse direction. Therefore we hard wire the R/W line of the LCD panel, into write mode. This will cause no bus conflicts on the data lines. As a result we cannot read back the LCD's internal Busy Flag which tells us if the LCD has accepted and finished processing the last instruction. This problem is overcome by inserting known delays into our program. The 10k Potentiometer controls the contrast of the LCD panel. Nothing fancy here. As with all the examples, I've left the power supply out. We can use a bench power supply set to 5v or use an onboard +5 regulator. Remember a few de-coupling capacitors, especially if we have trouble with the circuit working properly.

SETB RW

Handling the EN control line:

As we mentioned above, the EN line is used to tell the LCD that we are ready for it to execute an instruction that we've prepared on the data bus and on the other control lines. Note that the EN line must be raised/ lowered before/after each instruction sent to the LCD regardless of whether that instruction is read or write text or instruction. In short, we must always manipulate EN when communicating with the LCD. EN is the LCD's way of knowing that we are talking to it. If we don't raise/lower EN, the LCD doesn't know we're talking to it on the other lines.

Thus, before we interact in any way with the LCD we will always bring the **EN** line low with the following instruction:

CLR EN

And once we've finished setting up our instruction with the other control lines and data bus lines, we'll always bring this line high:

SETB EN

The line must be left high for the amount of time required by the LCD as specified in its datasheet. This is normally on the order of about 250 nanoseconds, but checks the datasheet. In the case of a typical microcontroller running at 12 MHz, an instruction requires 1.08 microseconds to execute so the EN line can be brought low the very next instruction. However, faster microcontrollers (such as the DS89C420 which executes an instruction in 90 nanoseconds given an 11.0592 MHz crystal) will require a number of NOPs to create a delay while EN is held high. The number of NOPs that must be inserted depends on the microcontroller we are using and the crystal we have selected.

The instruction is executed by the LCD at the moment the EN line is brought low with a final CLR EN instruction.

Checking the busy status of the LCD:

As previously mentioned, it takes a certain amount of time for each instruction to be executed by the LCD. The delay varies depending on the frequency of the crystal attached to the oscillator input of the LCD as well as the instruction which is being executed.While it is possible to write code that waits for a specific amount of time to allow the LCD to execute instructions, this method of "waiting" is not very flexible. If the crystal frequency is changed, the software will need to be modified. A more robust method of programming is to use the "Get LCD Status" command to determine whether the LCD is still busy executing the last instruction received.

The "Get LCD Status" command will return to us two tidbits of information; the information that is useful to us right now is found in DB7. In summary, when we issue the "Get LCD Status" command the LCD will immediately raise DB7 if it's still busy executing a command or lower DB7 to indicate that the LCD is no longer occupied. Thus our program can query the LCD until DB7 goes low, indicating the LCD is no longer busy. At that point we are free to continue and send the next command.

3.8 Voltage Transformer:

A Voltage Transformer (VT) is a device which converts energy of one form to another. VT's are used to monitor alternating AC or DC current by measuring voltage directly or through a VT. Voltage Transformers are a parallel connected type of instrument transformer. Voltage transformers (VT), also called potential transformers (PT), are a parallel-connected type of instrument transformer.

Markings

Some transformer winding primary (usually high-voltage) connection points may be labeled as H_1, H_2 (sometimes H_0 if it is internally designed to be grounded) and X_1, X2 and sometimes an X_3 tap may be present. Sometimes a second isolated winding (Y_1, Y_2, Y_3) (and third (Z_1, Z_2, Z_3) may also be available on the same voltage transformer. The primary may be connected phase to ground or phase to phase. The secondary is usually grounded on one terminal to avoid capacitive induction from damaging low-voltage equipment and for human safety.

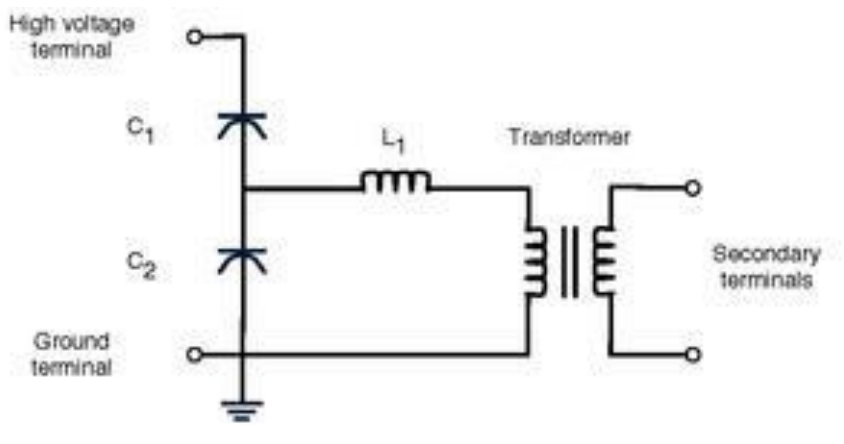

Types of PTs

There are three primary types of potential transformers (PT): electromagnetic, capacitor, and optical. The electromagnetic potential transformer is a wire-wound transformer. The capacitor voltage transformer (CVT) uses a capacitance potential divider and is used at higher voltages due to a lower cost than an electromagnetic PT. An optical voltage transformer exploits the electrical properties of optical materials.

Scaling

Adding potential transformers has the effect of reducing the measured line voltage by the PT ratio (let's say 35:1 for this example). So a voltage of 4200 Vac becomes 120 Vac. Since the meter sees 120 Vac, many of the measurements it reports will be low by a factor of 35 unless they are scaled up by 35.

Watt Node for Lon Works models with Option PT perform this scaling internally. Other models will need to have the data scaled externally by the data collection system.

In particular, the following quantities need to be scaled (if applicable for your meter):

- Voltage
- Power - since power is computed from the voltage and current. This includes all real, reactive, and apparent power values.
- Demand - this is the average power over an interval
- Energy - This includes all real, reactive, and apparent energy values. When using a pulse meter, multiply the kWh scale factor by the PT ratio.

The current, frequency, and power factor measurements are not affected by PTs.

CCS supplies the Watt Node meter rated up to 600 Vac and current transformers rated for use on circuits up to 600 Vac. CCS does not supply potential transformers, fuses, or CTs rated for use on medium voltage circuits, so you will need to find other suppliers for these components.

Potential Transformer Circuits

This section describes the most common service types and PT circuits encountered. It provides recommended wiring diagrams and information on the measurements. In most cases, PTs are used with medium voltage circuits ranging from 2400 Vac to 35,000 Vac, so this will show medium voltage examples. The same circuits may also be used for lower or high voltage PTs.

1. Three-Wire Delta Service

Many medium voltage services are three-wire delta services without a neutral conductor. These use one of the following grounding schemes:

- **Floating:** In many cases, delta wound transformers are left ungrounded. This has the advantage of allowing a ground fault on one of the phases from tripping the breaker and disrupting service.

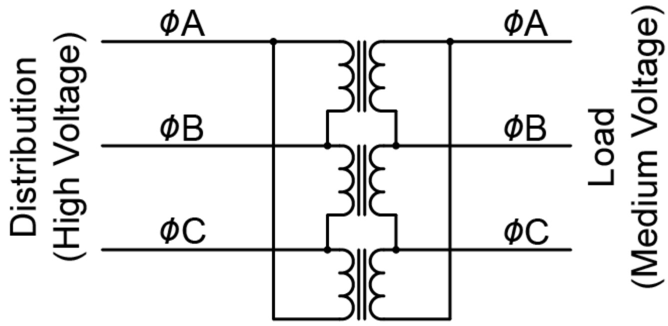

Utility Transformer: Delta-to-Delta Floating

- **Corner Ground:** One corner, typically phase B, is grounded.

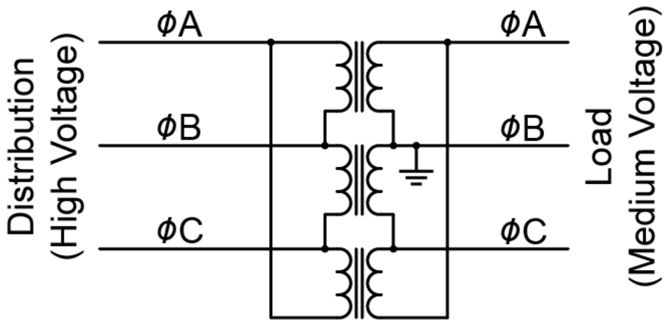

Utility Transformer: Delta-to-Delta Floating with corner ground

- **Center Ground:** In this configuration, one winding is center-tapped and the center point tied to ground.
- **Other:** Other possibilities are possible (though uncommon) and include resistive grounding and inductive grounding.

All of the above grounding configurations (including floating) can be monitored as shown in Figure 3 below. This can use two or three element PTs. The third PT element is redundant (unnecessary) for this configuration and is shown in gray in the figure. As a result of grounding the phase B output of the PT, the WattNode meter will only report voltage, current, power, and energy for two phases: phase A and phase C.

Blundell's theorem explains that the sum results (*Power Sum* and *Energy Sum*) are accurate with this configuration. However, the reported power, reactive power, and power factor for the two individual phases may appear imbalanced, even if the actual load is balanced, so in this configuration, only the power and energy sums are meaningful.

Because CCS does not offer a Watt Node model that supports a delta circuit with 120 Vac line-to-line, you must wire the meter line-to-neutral. Therefore, we recommend using phase B as the reference and tying it to ground and neutral. This will result in zero readings for phase B from the meter.

Note, the PT primaries are monitoring the medium voltage line-to-line voltages, so select the PT ratio based on the line-to-line voltages.

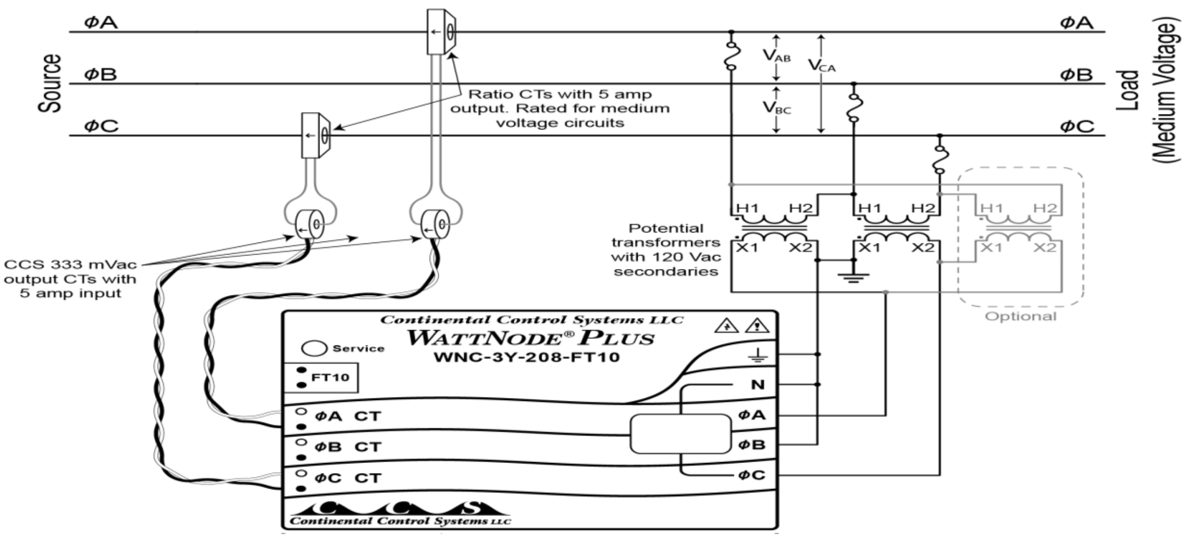

Monitoring a Delta circuit

2. Four-Wire Wye Service

This is a medium voltage wye service with a neutral conductor. The utility transformer may be a delta-wye (shown below) or a wye-wye transformer.

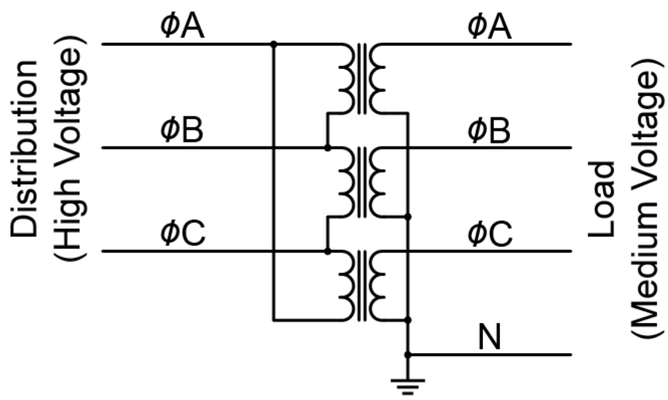

Utility transformer: Delta to wire

In this configuration, the PT primaries and secondaries are both wired in wye configurations. If either side of the PT were wired in a delta, it would cause a 30° voltage phase shift and incorrect readings.

Note: the PT primaries monitor the medium voltage line-to-neutral voltages, not the line-to-line voltages. So be careful to select the correct PT ratio. For example, if the medium voltage circuit is 4160/2400Y (2400 Vac line-to-neutral) you would need a 20:1 PT ratio to step the voltage down to 120 Vac.

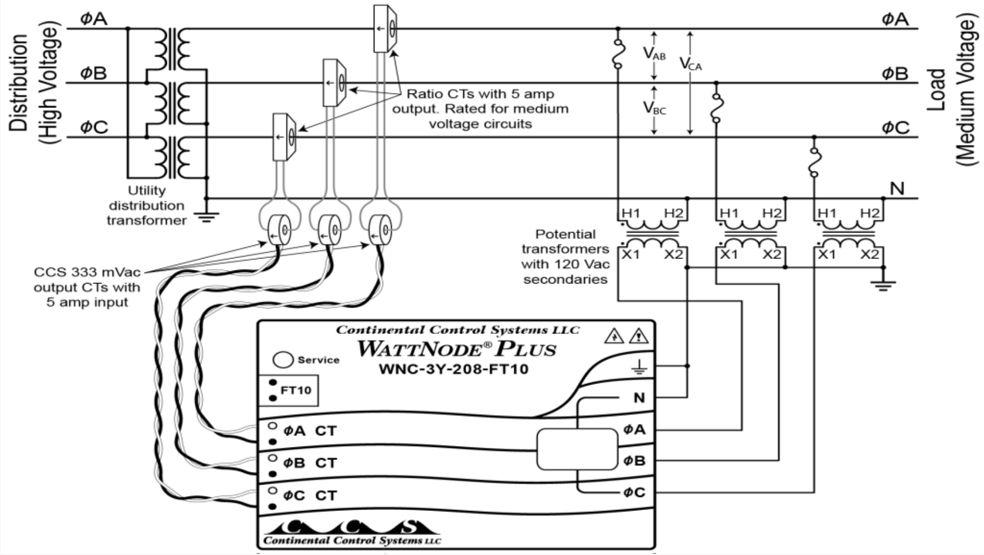

Monitoring a Four-Wire Wye Circuit With Neutral

3. Three-Wire Wye Service (No Neutral)

This is the same as the four-wire wye service except no neutral wire is brought out to the load. V_A to ground, V_B to ground, and V_C to ground are all nearly equal. The ground potential is the same as neutral if neutral were used.

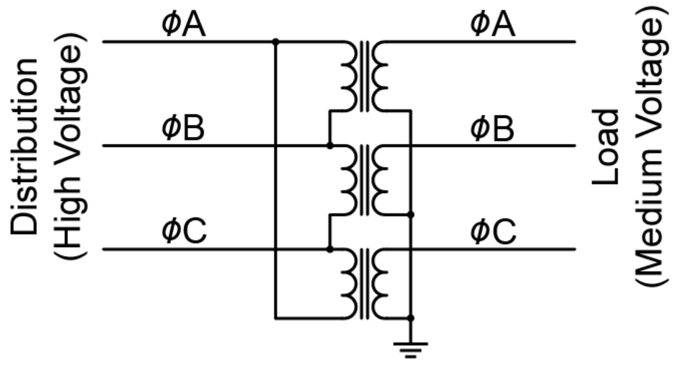

Utility Transformer: Delta-to-Wye Without Neutral

Three-wire wye service can be monitored with two different PT configurations.

Three-Element PT (Wye Output): This is the preferred PT configuration, because the meter will provide per-phase voltage, current, power, and energy readings for all three phases.In this configuration, the PT primaries and secondaries are both wired in wye configurations. If one side of the PT were wired in a delta, it would cause a 30° voltage phase shift and incorrect readings.

POTENTIAL TRANSFORMER

Potential transformers are instrument transformers. They have a large number of primary turns and a few numbers of secondary turns. It is used to control the large value of voltage. A Potential Transformer is a special type of transformer that allows meters to take readings from electrical service connections with higher voltage (potential) than the meter is normally capable of handling without at potential transformer.

WORKING

The potential transformer works along the same principle of other transformers. It converts voltages from high to low. It will take the thousands of volts behind power transmission systems and step the voltage down to something that meters can handle. These transformers work for single and three phase systems, and are attached at a point where it is convenient to measure the voltage.

A voltage transformer (VT) is used on alternating current (AC) systems to provide a standardized equivalent or representative voltage compared to that of a higher voltage (HV) primary systemAt low voltage, e.g. the household 400/230v power supply systems, it is safe and simple enough to measure the voltage directly with a voltmeter or other instrument requiring the voltage information.At high voltages, e.g. greater than 1000v, it is no longer safe to do a direct measurement, thus voltage transformers are used to provide isolation from the high voltage and give a secondary output proportional to the high voltage. For example, an 11kV supply system will typically use an 11kV / 110v voltage transformer to give secondary voltage of 110v which is 100 times smaller than the supply voltage. (the complexity of three phase systems is not covered here).By measuring this secondary VT voltage and multiplying by 100, a person will have the value of the 11kV supply voltage.

Transformers all have errors/losses, including VTs, thus the VT is specifically designed to international standards, such as IEC 60044, to provide a small but acceptable error of measurement. The design allows for a small measurement load and is not intened to supply power to large loads. Its function is to modify the input to some other output to be useful minus quite of bit of power loss at full load. I also provide isolation from the source and can provide impedance matching for maximum power transfer

ADVANTAGES

The advantage of a transformer is that it produces current at the correct voltage eg if you have something that works at 12 volts and you want to run it off the mains, you need a transformer that will produce current at 12 volts

Applications:

1. For Metering Purpose.
2. Required for Synchronisation of Feeders/Generate with Grid
3. For Feedback of distance Protection of feeders.
4. Impedance protection of Generators eg. Back up Imp. , Field Failure , Pole slip etc.
5. Any protection which require voltage signal eg. Freq. , over flux , over /under voltage etc
6. Over/Under Freq. Protection
7. Synchronizing Generator to Grid

8. If you don't have spare of PMG then you can use this PT for AC Power supply to the excitation Unit of your own Generator

3.9 Buzzer:

Buzzer

Basically, the sound source of a piezoelectric sound component is a piezoelectric diaphragm. A piezoelectric diaphragm consists of a piezoelectric ceramic plate which has electrodes on both sides and a metal plate (brass or stainless steel, etc.). A piezoelectric ceramic plate is attached to a metal plate with adhesives. Applying D.C. voltage between electrodes of a piezoelectric diaphragm causes mechanical distortion due to the piezoelectric effect. For a misshaped piezoelectric element, the distortion of the piezoelectric element expands in a radial direction. And the piezoelectric diaphragm bends toward the direction. The metal plate bonded to the piezoelectric element does not expand. Conversely, when the piezoelectric element shrinks, the piezoelectric diaphragm bends in the direction Thus, when AC voltage is applied across electrodes, the bending is repeated, producing sound waves in the air.

To interface a buzzer the standard transistor interfacing circuit is used. Note that if a different power supply is used for the buzzer, the 0V rails of each power supply must be connected to provide a common reference. If a battery is used as the power supply, it is worth remembering that piezo sounders draw much less current than buzzers.

To switch on buzzer -high 1

To switch off buzzer -low 1

Notice (Handling) In Using Self Drive Method

1) When the piezoelectric buzzer is set to produce intermittent sounds, sound may be heard continuously even when the self drive circuit is turned ON / OFF at the "X" point shown in Fig. 9. This is because of the failure of turning off the feedback voltage.

2) Build a circuit of the piezoelectric sounder exactly as per the recommended circuit shown in the catalog. Hfe of the transistor and circuit constants are designed to ensure stable oscillation of the piezoelectric sounder.

3) Design switching which ensures direct power switching.

4) The self drive circuit is already contained in the piezoelectric buzzer. So there is no need to prepare another circuit to drive the piezoelectric buzzer.

5) Rated voltage (3.0 to 20Vdc) must be maintained. Products which can operate with voltage higher than 20Vdc are also available.

6) Do not place resistors in series with the power source, as this may cause abnormal oscillation. If a resistor is essential to adjust sound pressure, place a capacitor (about 1μF) in parallel with the piezo buzzer.

7) Do not close the sound emitting hole on the front side of casing.

8) Carefully install the piezo buzzer so that no obstacle is placed within 15mm from the sound release hole on the front side of the casing.

Fig 3.9.1: Picture of buzzer

Buzzers are essential components in alerting systems due to their ability to produce loud, attention-grabbing sounds that signal emergencies or critical events. They are compact, energy-efficient, and can emit distinct sound patterns like continuous tones, pulses, or intervals to convey varying levels of urgency. Widely used in fire alarms, security systems, medical devices, and industrial setups, buzzers play a key role in ensuring safety and prompt responses. Their reliability and versatility make them indispensable in scenarios requiring immediate attention.

CHAPTER 4

SOFTWARE DESCRIPTION

This project is implemented using following software's:

Arduino IDE Studio Compiler - for compilation part

4.1 Arduino IDE Compiler:

This instructable adds to any of the Arduino on a Breadboard instructables. We need a microcontroller with a pre-loaded Bootloader, or must load your own. Not all ATmega328's are equal.(A bootloader, very simply, is a programme that sits on the chip and manages the upload of your sketches onto the chip)

4.2 Procedural steps for compilation, simulation and dumping:

This board is based on the **[Arduino ESP32 Board Package]**, that is derived from the original ESP32 Board Package. It provides a rich set of examples to access the various features on your board, which is accessed directly through the IDE.

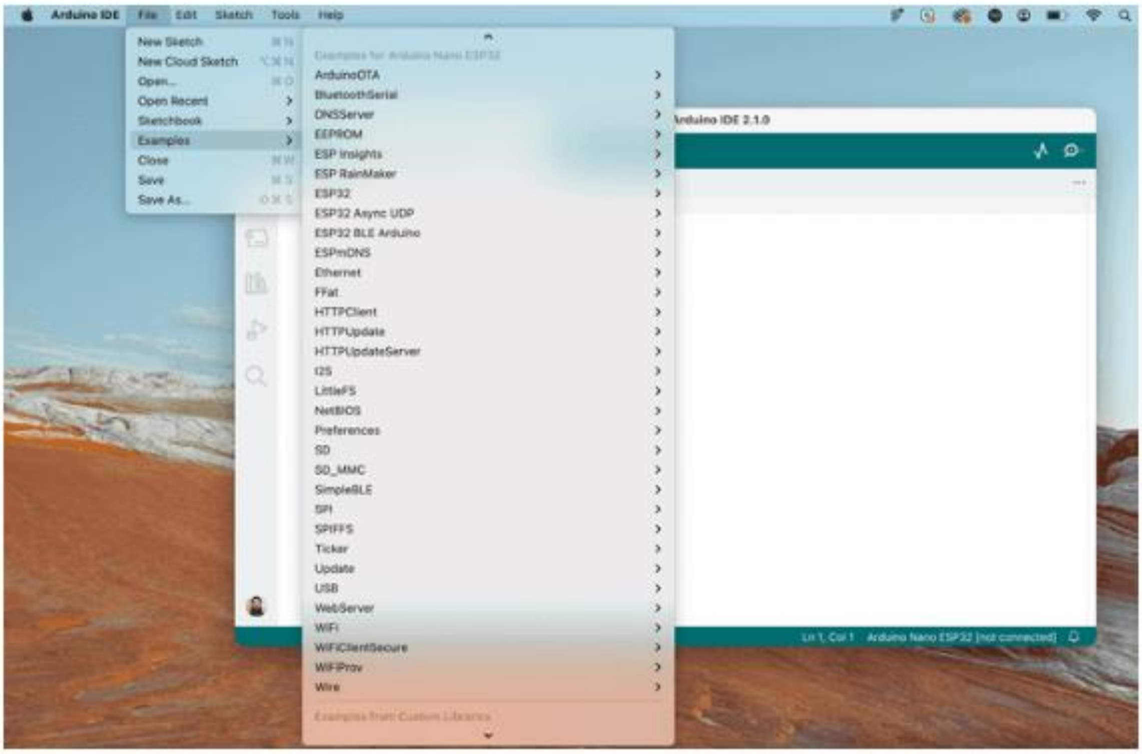

ESP32 examples in the IDE.

To install the Board Package, go the board manager and search for Nano ESP32. For more detailed instructions to install the Board Package, please refer to the Getting Started with Nano ESP32 article.

Smart load balancing of transformers using the ESP32 involves a sophisticated software system designed to enhance power distribution efficiency and prevent overloading. The ESP32 microcontroller, with its built-in Wi-Fi and Bluetooth capabilities, serves as the central control unit, seamlessly integrating hardware and software to manage loads dynamically. The software begins by interfacing with a network of sensors that measure parameters such as voltage, current, temperature, and load on each transformer in real time. Using these inputs, the system employs intelligent algorithms to analyze load distribution patterns and automatically redistribute electrical loads to ensure optimal performance. The redistribution process is guided by defined thresholds to maintain transformer safety and prevent overloading.

The ESP32 also enables wireless communication, allowing the software to send data to a central server or cloud platform for remote monitoring and analysis. Users can access this data through a user-friendly web or mobile application, which provides real-time dashboards, performance insights, and manual control options when necessary. In addition to load balancing, the software includes predictive maintenance features powered by advanced analytics or machine learning algorithms, which identify unusual patterns in parameters such as temperature spikes or current surges to predict potential transformer failures. This capability minimizes downtime and enhances the system's reliability. The software also prioritizes scalability, allowing it to manage multiple transformers efficiently and adapt to varying load conditions in smart grid environments. Implementation involves programming the ESP32 using platforms like Arduino IDE or ESP-IDF, integrating communication protocols such as MQTT or HTTP for data transmission, and testing the system under simulated conditions to ensure robustness. Overall, this software not only optimizes energy use but also prolongs the lifespan of transformers, reduces operational costs, and supports the transition toward smarter energy grids, making it a vital tool in modern power distribution systems.

CHAPTER 5

RESULT,

CONCLUSION AND LIMITATIONS

5.1 Result:

The project “Smart Load Balancing Of Transformers Using Microcontroller Based Automation” was designed to share the load current between two transformers. When ever the load voltage exceeds the limit current transformer identifies and activates the second transformer. The transformer load sharing will be done by micro controller with the help of electro-magnetic relay. And the load will be monitored on LCD with help of current transformers.

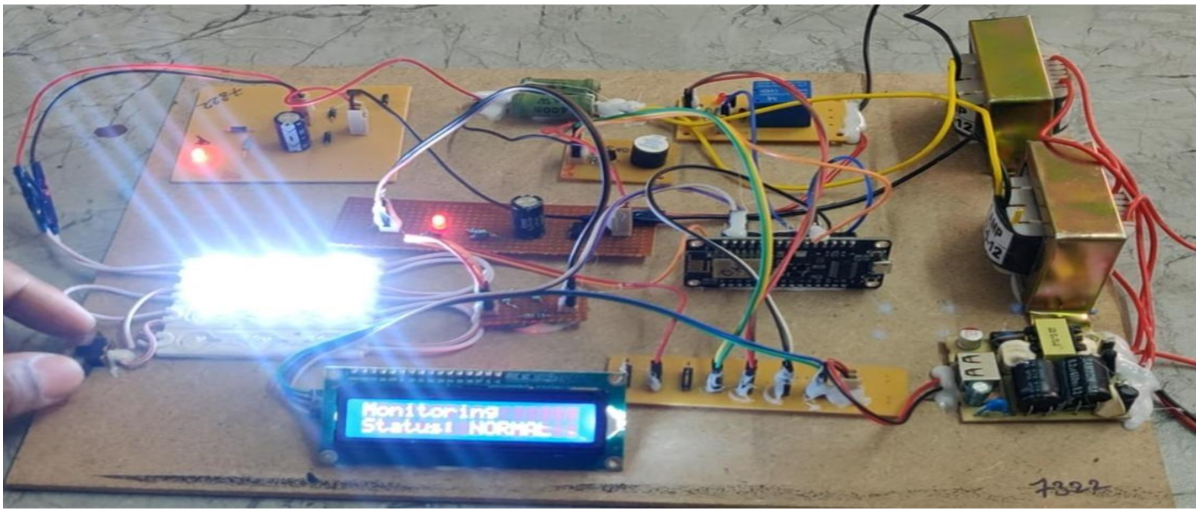

Figure 5.1.1:Under Normal Condition

Figure 5.1.1 shows that both the transformers are in normal condition.

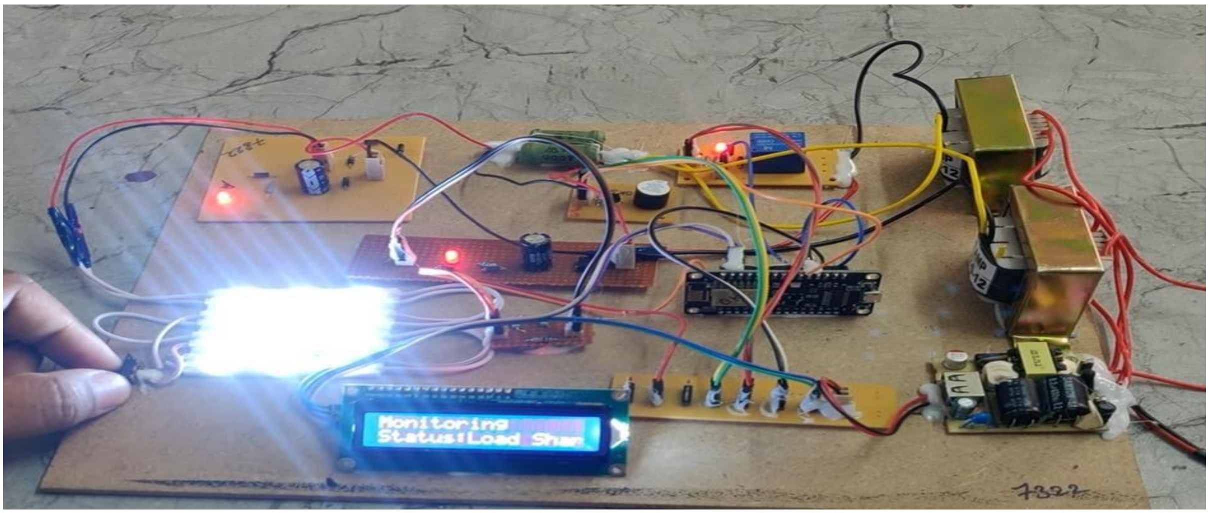

Figure 5.1.2:Under Load sharing condition

Figure 5.1.2 shows that primary transformer is sharing load with secondary transformer under overloading condition.

The implementation of smart load balancing in power transformers using ESP32 has led to remarkable improvements in energy efficiency, grid stability, and transformer lifespan. In conventional power distribution systems, transformers are often subjected to uneven load distribution, which results in inefficiencies such as excessive heating, voltage fluctuations, and unexpected failures. These issues are particularly prevalent in aging power grids where loads fluctuate dynamically based on consumer demand, industrial operations, and seasonal variations. However, by integrating ESP32-based monitoring and control systems, real-time data acquisition and intelligent decision-making have become feasible, leading to more adaptive load management strategies. The ESP32 microcontroller, equipped with Wi-Fi and Bluetooth communication capabilities, enables seamless interaction between multiple transformers, sensors, and cloud-based platforms, ensuring that loads are evenly distributed and optimized in real-time. By continuously analyzing critical parameters such as voltage, current, temperature, power factor, and transformer efficiency, the system can proactively detect potential overloads and redistribute power before failures occur. This not only prevents transformer overheating and system-wide blackouts but also significantly reduces energy losses associated with inefficient load handling.

Additionally, ESP32's ability to integrate with Internet of Things (IoT) networks allows for remote access and automated control, enabling grid operators to monitor and adjust transformer loads from centralized or decentralized locations. This level of automation minimizes the need for manual inspections and interventions, thereby enhancing operational efficiency and reducing labor costs. Furthermore, the integration of cloud-based analytics and machine learning algorithms with ESP32 enables predictive maintenance and demand forecasting, allowing utilities to identify trends, optimize transformer operations, and enhance overall grid performance. By ensuring a more balanced load distribution across multiple transformers, ESP32-based smart systems improve the reliability of electricity supply, making the power grid more resilient against fluctuations in demand and potential failures.

Apart from improving operational efficiency, smart load balancing using ESP32 leads to substantial economic benefits by reducing maintenance costs, energy wastage, and capital expenditures on transformer replacements. Traditionally, power distribution companies often oversize transformers to handle peak loads, even though such peaks occur infrequently. This results in underutilized transformer capacity for most of the time, leading to inefficient energy consumption and increased capital expenditure. With the deployment of ESP32-based smart monitoring, transformer loading can be dynamically adjusted based on real-time demand, ensuring that each unit operates within its optimal range. By preventing overloads and excessive heating, the system minimizes the degradation of transformer components such as windings, insulation, and cooling systems, thereby extending their operational lifespan and reducing the frequency of replacements.

This translates into major cost savings for power utilities, as transformer failures often require expensive repairs, replacements, and prolonged downtime. Furthermore, the ability of ESP32 to automate load distribution eliminates the reliance on traditional manual load management techniques, which are prone to errors, delays, and inefficiencies. By leveraging real-time data analytics and AI-driven optimization, power utilities can also predict demand patterns, optimize energy distribution, and ensure that power is supplied efficiently without unnecessary overloading or underutilization of resources. Additionally, reduced transmission losses associated with balanced transformer loads contribute to overall energy conservation, leading to a more sustainable power distribution network. As energy efficiency regulations become more stringent worldwide, utilities adopting ESP32-based smart load balancing will not only comply with these standards but also enhance their competitiveness by reducing operational costs and improving service reliability. With the rapid adoption of smart grid technologies, the role of ESP32 in transformer load management is expected to grow, offering new possibilities for optimizing power distribution, reducing dependency on fossil fuels, and integrating renewable energy sources more effectively into the grid.

Beyond economic and efficiency gains, smart load balancing with ESP32 significantly improves power quality, stability, and resilience of the electrical grid. One of the biggest challenges in power distribution is ensuring a stable voltage supply to end users, as fluctuations in transformer loads can result in voltage sags, frequency deviations, harmonics, and unstable power delivery. These issues are particularly problematic in industrial and commercial settings, where sensitive electronic equipment relies on consistent voltage and frequency levels. Uneven transformer loading can lead to unpredictable voltage variations, increasing the risk of equipment damage, production downtime, and financial losses. However, with an ESP32-based smart load balancing system, real-time adjustments ensure that transformer loads remain within safe operating limits, thereby stabilizing voltage output and reducing harmonic distortions. This is especially critical in modern smart grids, where the integration of renewable energy sources such as solar and wind power introduces additional variability in power generation.

By dynamically distributing loads across multiple transformers, the ESP32 system ensures that fluctuations in supply and demand do not cause severe grid instability. Additionally, the decentralized processing capability of ESP32 allows for local decision-making, reducing response time and enhancing the self-healing capabilities of the power grid. In the event of an unexpected transformer failure or sudden demand spike, the system can quickly redistribute the load to other transformers, minimizing disruptions and maintaining uninterrupted power supply. Furthermore, with the increasing digitalization of power distribution networks, the ESP32 platform provides a scalable solution for integrating advanced grid monitoring, cybersecurity measures, and remote diagnostics. By leveraging real-time sensor data and intelligent algorithms, ESP32-based smart load balancing not only enhances transformer performance but also contributes to the development of a more adaptive, sustainable, and resilient energy infrastructure. In the long run, the adoption of such intelligent load management solutions will play a crucial role in addressing the growing energy demands of urbanization, electrification of transport, and expansion of smart city initiatives worldwide.

5.2 Conclusion:

The successful development and deployment of a smart load balancing system for transformers using the ESP32 microcontroller demonstrate a significant leap forward in modern energy management. This innovative approach merges advanced microcontroller technology with intelligent algorithms to effectively manage electrical loads, ensuring system reliability, operational efficiency, and sustainability. The solution highlights the importance of leveraging cutting-edge tools and practices to address the challenges of power distribution in today’s fast-evolving energy landscape.First and foremost, the system’s ability to achieve real-time load balancing is a testament to its efficiency and effectiveness. By utilizing ESP32's computational and connectivity features, the system can collect and process real-time data from transformers, such as current, voltage, and load parameters.

This data enables dynamic load distribution, ensuring that no transformer is overloaded while others remain underutilized. The result is a balanced system where transformers operate within their optimal range, reducing the risk of failure and prolonging their lifespan. This automated, data-driven approach eliminates the need for manual intervention, making the entire process seamless and reliable. The adoption of the ESP32 microcontroller brings notable advantages to this system, particularly its wireless connectivity capabilities, computational power, and energy efficiency. The ESP32 can communicate with multiple transformers and central monitoring systems through Wi-Fi and Bluetooth, enabling a cohesive and interconnected network. Its dual-core processor ensures fast and accurate processing of data, making it capable of handling complex algorithms required for intelligent load balancing. Additionally, the microcontroller's low power consumption aligns with the broader goal of promoting energy conservation in power distribution systems.A critical strength of this project lies in its enhanced monitoring and predictive capabilities. The system collects detailed performance metrics from each transformer, allowing it to identify patterns, trends, and potential anomalies.

This data not only facilitates real-time load adjustments but also supports predictive maintenance. By identifying issues before they escalate into critical failures, the system reduces downtime, minimizes repair costs, and enhances the reliability of power supply. The integration of such advanced monitoring features underlines the forward-looking nature of the project and its commitment to optimizing transformer performance. In conclusion, the smart load balancing system for transformers using ESP32 represents a significant advancement in addressing the challenges of modern power distribution. Its combination of real-time operation, intelligent decision-making, enhanced monitoring, adaptability, and cost-efficiency ensures reliable and sustainable energy delivery. By leveraging the robust features of the ESP32 microcontroller, the system not only meets current demands but also positions itself as a foundation for future innovations in smart grid technology. This achievement underscores the importance of integrating advanced tools with practical applications to build a more efficient and sustainable energy ecosystem.

5.3 Limitations:

While the ESP32 microcontroller has proven to be a versatile and cost-effective tool for implementing smart load balancing in transformer systems, it does come with certain limitations. Its hardware constraints, including limited processing power and memory, restrict the complexity of algorithms that can be executed directly on the device. Scalability is another challenge, as the ESP32 is more suitable for localized systems rather than large-scale electrical grids with extensive interconnected components. Network reliability poses concerns, as the microcontroller relies on Wi-Fi and Bluetooth, which are susceptible to interference and instability. Energy consumption, while generally efficient, can still be significant in real-time monitoring setups, particularly in off-grid applications

CHAPTER 6

FUTURE SCOPE & VALIDATION TECHNIQUES

6.1 FUTURE SCOPE:

The future scope of smart load balancing of transformers using ESP32 is promising, as it aligns with evolving energy needs and advancements in technology. With increasing global energy demands, the efficient management of electrical loads has become a critical concern. This innovative system, powered by ESP32, has the potential to play a pivotal role in enhancing power distribution networks, ensuring reliability, sustainability, and cost-effectiveness. One significant future application lies in its integration with smart grids. Smart grids represent the next generation of electricity networks, combining digital communication and advanced technology to optimize energy distribution. The load balancing system using ESP32 can seamlessly integrate into smart grids, enabling real-time monitoring and intelligent load management. By ensuring balanced distribution and preventing transformer overloads, this technology contributes to the stability and efficiency of the entire grid, supporting the development of resilient energy systems.

Another promising aspect of the system is its scalability and adaptability. As energy infrastructure continues to expand, the system can be applied to larger networks with multiple transformers and diverse load profiles. Its modular design allows for customization based on specific requirements, ensuring flexibility in implementation. The use of ESP32, with its wireless communication capabilities, further simplifies deployment and minimizes infrastructure costs, making it suitable for both urban and rural settings. The system's adaptability also positions it for applications in renewable energy integration. With the increasing adoption of solar, wind, and other renewable energy sources, balancing the intermittency of these resources is a growing challenge. The ESP32-based load balancing system can be utilized to manage fluctuations in energy supply and demand, ensuring efficient utilization of renewable energy and supporting the transition to a sustainable energy future.

The increasing focus on the Internet of Things (IoT) also creates new possibilities for this technology. As IoT devices proliferate, energy consumption patterns are becoming more complex, necessitating intelligent management solutions. The ESP32-based load balancing system can be integrated with IoT platforms, enabling seamless communication between devices and transformers. This integration facilitates more precise load management and contributes to the optimization of power distribution networks in a connected world.

6.2 VALIDATION TECHNIQUES:

Smart load balancing of transformers using ESP32 represents an innovative solution to address the challenges of power distribution and transformer efficiency in electrical systems. The approach centers around leveraging the capabilities of the ESP32 microcontroller to dynamically distribute electrical loads across multiple transformers, ensuring their optimal performance and preventing overload conditions. The ESP32, equipped with wireless communication features such as Wi-Fi and Bluetooth, facilitates seamless data collection from transformers, including real-time metrics like voltage, current, temperature, and load capacity. This data is processed using intelligent algorithms, which adjust the load distribution to maintain balance and prevent stress on individual transformers.One of the key benefits of this system is its ability to monitor and control transformer operations in real-time, allowing for automated and efficient load adjustments without the need for manual intervention. This automation enhances reliability and reduces the risk of transformer failure, improving the overall performance of the power distribution network. Additionally, the system supports predictive maintenance by identifying potential issues before they escalate, thus minimizing downtime and maintenance costs.

The integration of ESP32 also offers scalability and adaptability, making the system suitable for a wide range of applications—from small-scale local grids to expansive networks. Its wireless communication capabilities simplify installation and reduce infrastructure costs, while its modular design enables customization to meet specific operational requirements. In essence, smart load balancing using ESP32 not only enhances transformer utilization and energy conservation but also paves the way for future advancements in power management. By integrating cutting-edge technology, this system ensures efficient, sustainable, and reliable energy delivery, aligning with global priorities of efficiency and innovation in modern electrical systems.

CHAPTER 7
REFERENCES

REFERENCES

[1] Hassan Abniki, H.Afsharirad, A.Mohseni, F. Khoshkhati, Has-san Monsef, PouryaSahmsi „Effective On-line Parameters for Transformer Monitoring and Protection", on Northern American Power Symposium (NAPS), pp 1-5, September 2010.

[2] Tong Xiaoyang, Wu Guanging, Zhang Guangehun, Tan Yong-dong „A Transformer Online Monitoring and Diagnosis Em-bedded System Based on TCP/IP and Pub/Sub New Technology", on Properties and Applications of Dielectric Materials, vol 1, pp 467-470, June2003.

[3] SuxiangQian, Hongsheng Hu, „Design of Temperature Moni-toring System for Oil-Immersed Power Transformers based on MCU", on International Conference on Electronic Measurements and Instrumentation (ICEMI), May 2009.

[4] S.M Bashi, N. Mariun and A.rafa (2007). „Power Transformer protection using microcontroller based relay", Journal of applied science, 7(12), pp.1602-1607.

[5] V.Thiyagarajan & T.G. Palanivel, (J2010) „An efficient monitoring of substations using microcontroller based monitoring system" International Journal of Research and Reviews in Applied Sciences, 4 (1), pp.63-68.

[6] S.R. Balan, P. Sivanesan, R. Ramprakash, B. Ananthakannan and K. MithinSubash," GSM Based Automatic Substation Load Shedding and Sharing Using Programmable Switching Control", Journal of Selected Areas in Microelectronics, Volume 6, Issue 2, pp. 59-61.

[7] Ashish R. Ambalkar, Nitesh M. Bhoyar, Vivek V. Badarkhe and Vivek B. Bathe, "Automatic Load Sharing of Transformers", International Journal for Scientific Research & Development, Volume 2, Issue 12, pp. 739-741.

[8] Rekha. T, Bindu Prakash, Asna. S, Dinesh.S and Nandana. S. Prasad, "An Intelligent Method for Load Sharing of Transformers.

[9] Manish Mishra , "a review on load sharing of transformer".

[10] International journal of science technology and engineering, volume 3 issue 07 January 2017,506-507

[11]. Andure Shivam, Goukonde Mangesh, Vinayak Patil, Sagar Phapale and Prof. Sunita Upasani, "Automatic Load Sharing of Transformer, International Journal of Advanced Research in Science, Communication and Technology" Volume 2, Issue 4, 2022, Pp:334-338

[12]. Vidhun M, Akshara Shanmughan, Liya Immanual and Sreelakshmi V G, "Automatic Load Sharing of Transformers Using Microcontroller", International Journal of Advances in Engineering & Scientific Research, Vol.4, Issue 1, Jan-2017, Pp: 57-64

[13]. K V Shashankkumar, Raghavendra Naik, Naresh Nayak and Prof.Altaf Mudhol, "Load sharing of Transformer using Microcontroller", International Research Journal of Engineering and Technology, Volume: 06, Issue: 04, 2019, Pp:3831-3834

[14]. Shailesh G. Thakre, Pratima S. Komtolu, Abhishek V. Bisen, Saurabh D. Thengadi, and Ajit M. Lilhare, "Automatic Load Sharing of Transformer Using Microcontroller", International Research Journal of Modernization in Engineering Technology and Science, Volume:04, Issue:04, 2022, Pp: 389-392

[15]. Abhishek Gupta, Mohit Kothari, Prabhakar Kalani, Prakhar Goyal, Prateek Kambar, and Shurveer Singh, “Automatic Transformer Distribution and Load Sharing Using Microcontroller”, International Journal of Electrical and Electronics Research, Vol. 4, Issue 1, Pp: 140-145

[16]. Krushna K. Tormad, Dhiraj A. Nikalje, Ishwar H. Patil and Dhanashree A. Gayakhe, “Load Sharing of Transformers Automatically by using Arduino with GSM”, IC-RTETM-2022 Organized by GGSF's GGS Polytechnic, Nashik

[17]. T.Venkata Sai Kalyani , V.Sunil Kumar and Ch.Srinivas, Automatic Load Sharing of Transformers using Microcontroller, International Journal of Advanced Research in Electrical, Electronics and Instrumentation Engineering, Vol. 7, Issue 5, 2018, Pp: 2193-2199

[18]. Akhil Krishnan V, Arun P S, D Yathishan, Jomice Thomas, and D K Narayanan, “Automatic Load Sharing of Transformers using Microcontroller”, International Journal of Innovative Research in Science, Engineering and Technology, Vol. 5 , Issue 4, 2016, Pp: 5434-5441

[19].Sanaye-Pasand M, Zangiabadi M, Fereidunian A. An extended magnetizing inrush restraint method applied to digital differential relays for transformer protection. In: 2003 IEEE power engineering society general meeting (IEEE Cat. No. 03CH37491), vol. 4. New York: IEEE; 2003. p. 2077–82.

[20].Ngaopitakkul A, Kunakorn A. Internal fault classification in transformer windings using combination of discrete wavelet transforms and back-propagation neural networks. Int J Control Automation Sys. 2006;4(3):365–71.

[21].Genet T. Failure modes and effects analysis to mitigate failure of distribution transformers in Ethiopia. Ethiopia: AAU; 2017.

[22].Bashi S, Mariun N, Rafa A. Power transformer protection using microcontroller-based relay. J Appl Sci. 2007;7(12):1602–7.

[23].Salahat M, Al-Zyoud A. Modeling of transformer differential protection using programmable logic controllers. Eur J Sci Res. 2010;41(3):452–9.

[24].Aziz S, Wang Hz, Peng JC, Ruan JQ. Power sharing of transformer. In: 2018 international conference on power system technology (POWERCON). New York: IEEE; 2018. p. 4438–42.

[25].Ambalkar AR, Bhoyar NM, Badarkhe VV, Bathe VB. Automatic load sharing of transformers. Int J Sci Res Dev. 2015;2(12):739–41