Breadboard LED Circuit – 9V Battery Project Explanation

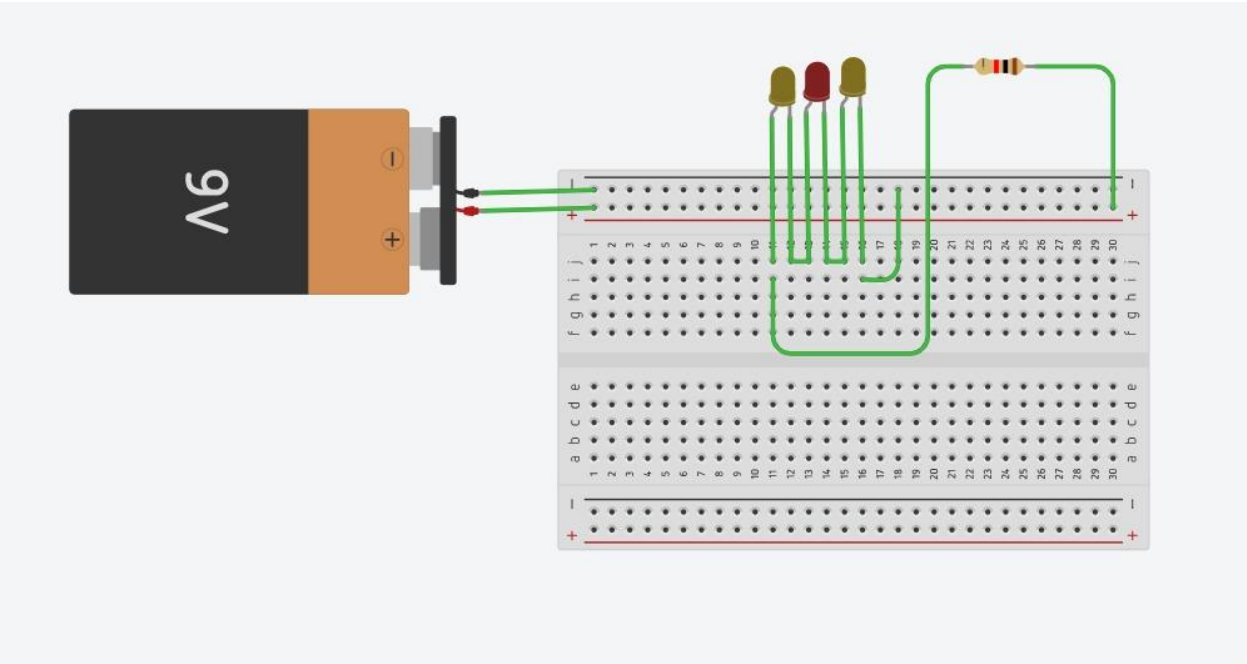

4

1. Introduction

This project is a **simple LED circuit built using a 9V battery and breadboard**.
It demonstrates the basic concepts of:

- Power supply connection
- LED operation
- Use of resistor for current control
- Breadboard wiring

---

2. Components Used

1. **9V Battery** – Power source
2. **Breadboard** – For circuit connections
3. **3 LEDs** – Light output (Yellow / Red / Green type)
4. **Resistor** – To limit current
5. **Jumper Wires** – For connections

---

3. Circuit Working Explanation

□ Power Connection

- The **positive terminal (+)** of the 9V battery is connected to the **positive rail** of the breadboard.
- The **negative terminal (–)** is connected to the **negative rail**.

□ LED Connections

- Each LED has:
  - **Anode (long leg)** → Connected to positive side
  - **Cathode (short leg)** → Connected toward resistor / ground

□ Resistor Role

- The resistor is connected in series with the LEDs.
- It controls current flow.
- Without the resistor, LEDs may burn due to high voltage.

---

4. How the Circuit Works

1. Battery supplies **9V DC power**.
2. Current flows from:
   - Positive rail → LED → Resistor → Negative rail.
3. When current passes through LEDs, they glow.
4. The resistor reduces voltage and limits current to safe level.

---

5. Basic Theory Behind It

Ohm's Law:

□=□×□V=I×R

For example:

- LED voltage drop ≈ 2V

- Remaining voltage across resistor ≈ 7V
- If we want 20mA current:

□=70.02=350ΩR=0.027=350Ω

So typically a **330Ω or 470Ω resistor** is used.

---

6. Concepts Demonstrated

✓ DC power supply
✓ Breadboard internal connections
✓ Series circuit
✓ Current limiting
✓ LED polarity understanding

---

7. Conclusion

This project demonstrates the fundamentals of electronics:

- Understanding voltage and current
- Proper component connection
- Safe circuit design
- Practical implementation of Ohm’s Law

It is a beginner-friendly but essential experiment in electronics learning.