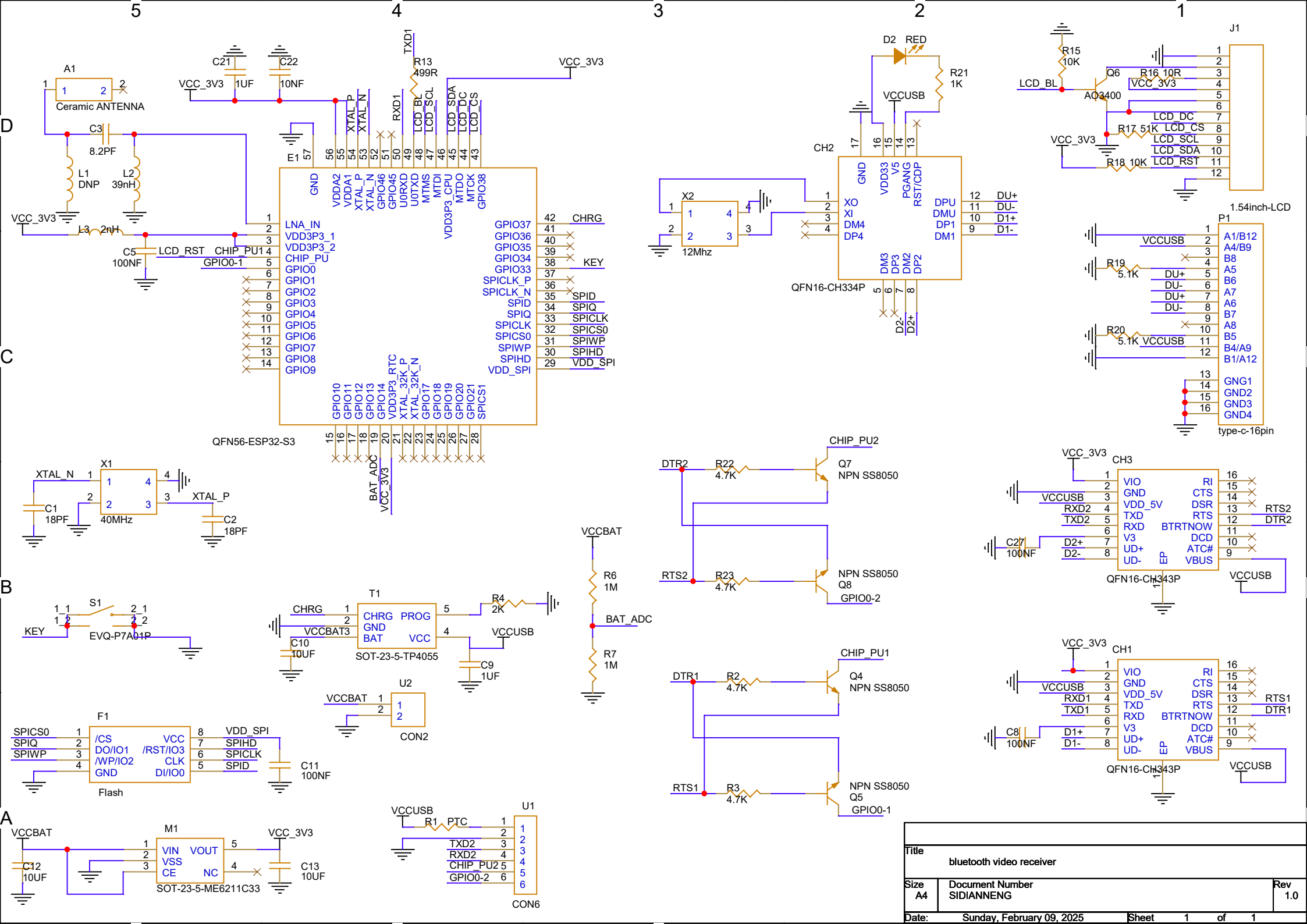

Title	bluetooth video receiver
Size A4	Document Number SIDIANNENG
Rev	1.0
Date:	Sunday, February 09, 2025
Sheet	1 of 1