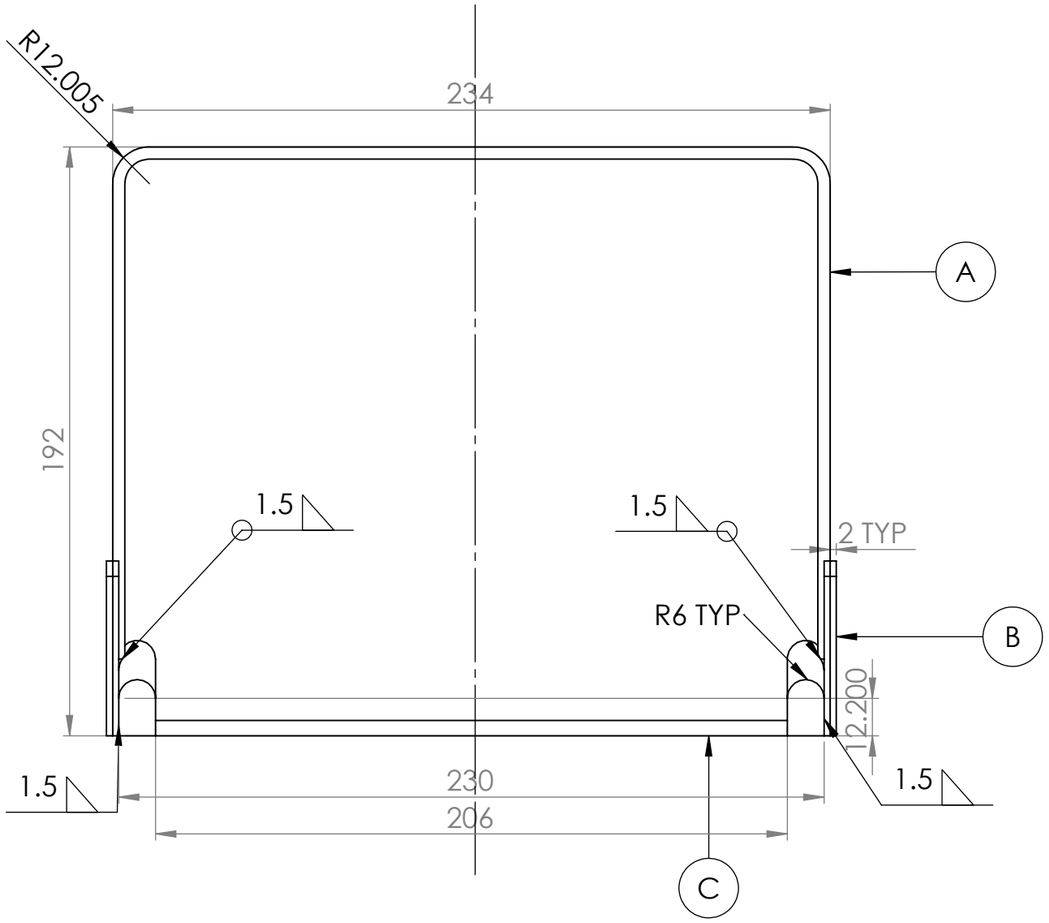

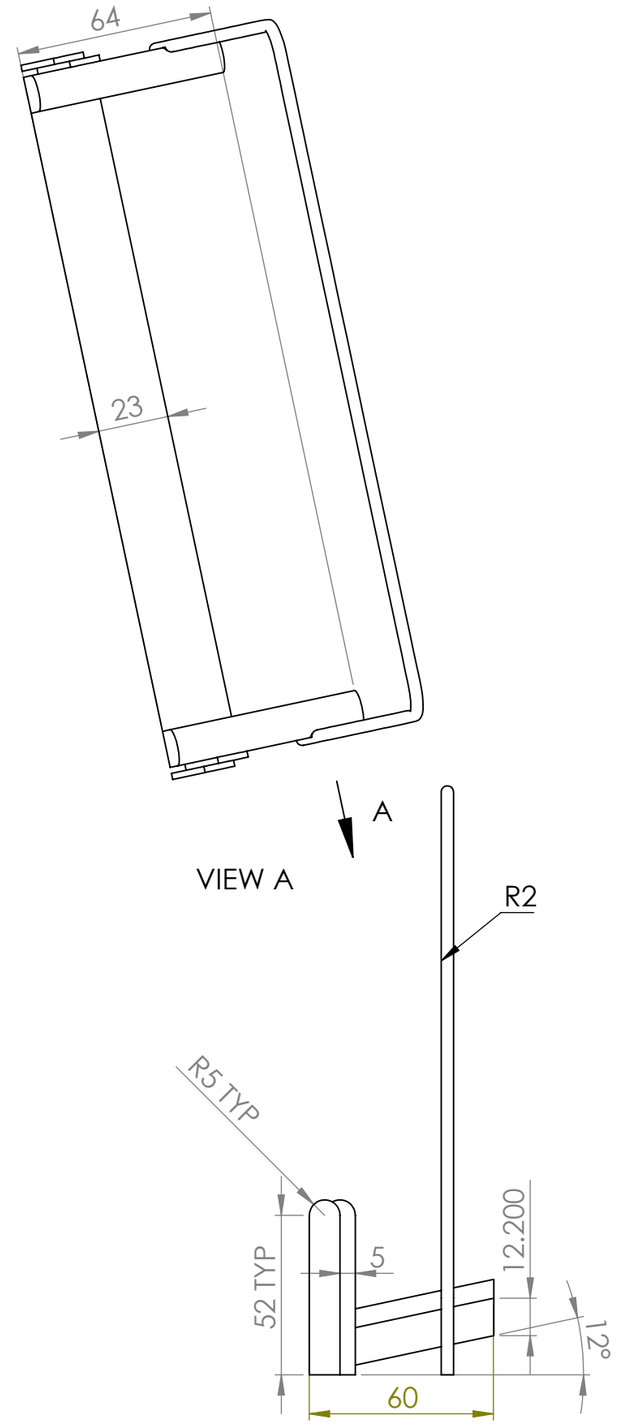

NOTES:
All dimensions in mm
General tol ± 0.2mm

TITLE:

Scoop

MATERIALS:
Ⓐ 1060 Aluminium
Ⓑ Plywood
Ⓒ Polyethylene

MONASH UNIVERSITY DEPARTMENT OF MECHANICAL ENGINEERING

DRN BY: Tong Siew Wen

DATE: 28/5/19

A3

SCALE 1:2

DWG NO. 14C

SOLIDWORKS Educational Product. For Instructional Use Only.