Ref. No. 4261
022011

ONKYO® SERVICE MANUAL

AV RECEIVER
MODEL HT-R390(B)

North American an d Brazilian models ---> DIMMER
European and Asian models ---> RT/PTY/TP

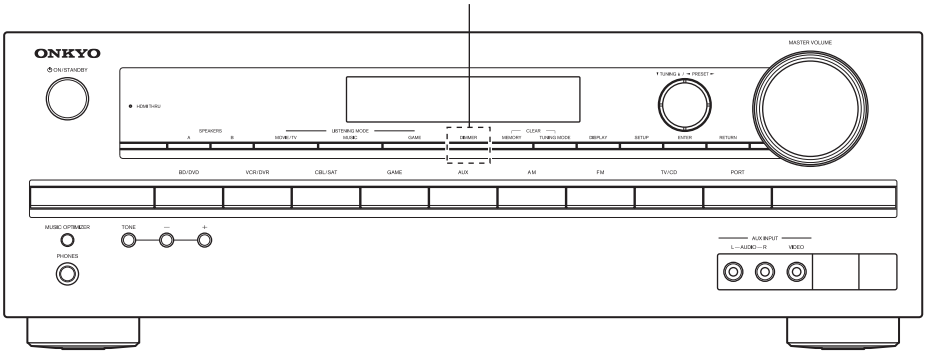

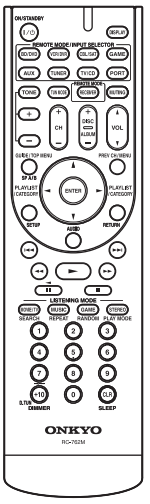

RC-762M

HT-R390 for HT-S3400 Black model

B MDC, B MDS	120V AC, 60Hz
B MMQ, B MMK	220-240V AC, 50/60Hz

HT-R390 for HT-S3405 Black model

B MPP	230V AC, 50Hz

HT-R390 for AVX-390 Black model

B MPP, B MPB	230V AC, 50Hz

SAFETY-RELATED COMPONENT WARNING!!

COMPONENTS IDENTIFIED BY MARK ⚠ ON THE SCHEMATIC DIAGRAM AND IN THE PARTS LIST ARE CRITICAL FOR RISK OF FIRE AND ELECTRIC SHOCK. REPLACE THESE COMPONENTS WITH ONKYO PARTS WHOSE PART NUMBERS APPEAR AS SHOWN IN THIS MANUAL.
MAKE LEAKAGE-CURRENT OR RESISTANCE MEASUREMENTS TO DETERMINE THAT EXPOSED PARTS ARE ACCEPTABLY INSULATED FROM THE SUPPLY CIRCUIT BEFORE RETURNING THE APPLIANCE TO THE CUSTOMER.

ONKYO SOUND & VISION CORPORATION
Service Department

EXPLODED VIEWS-1

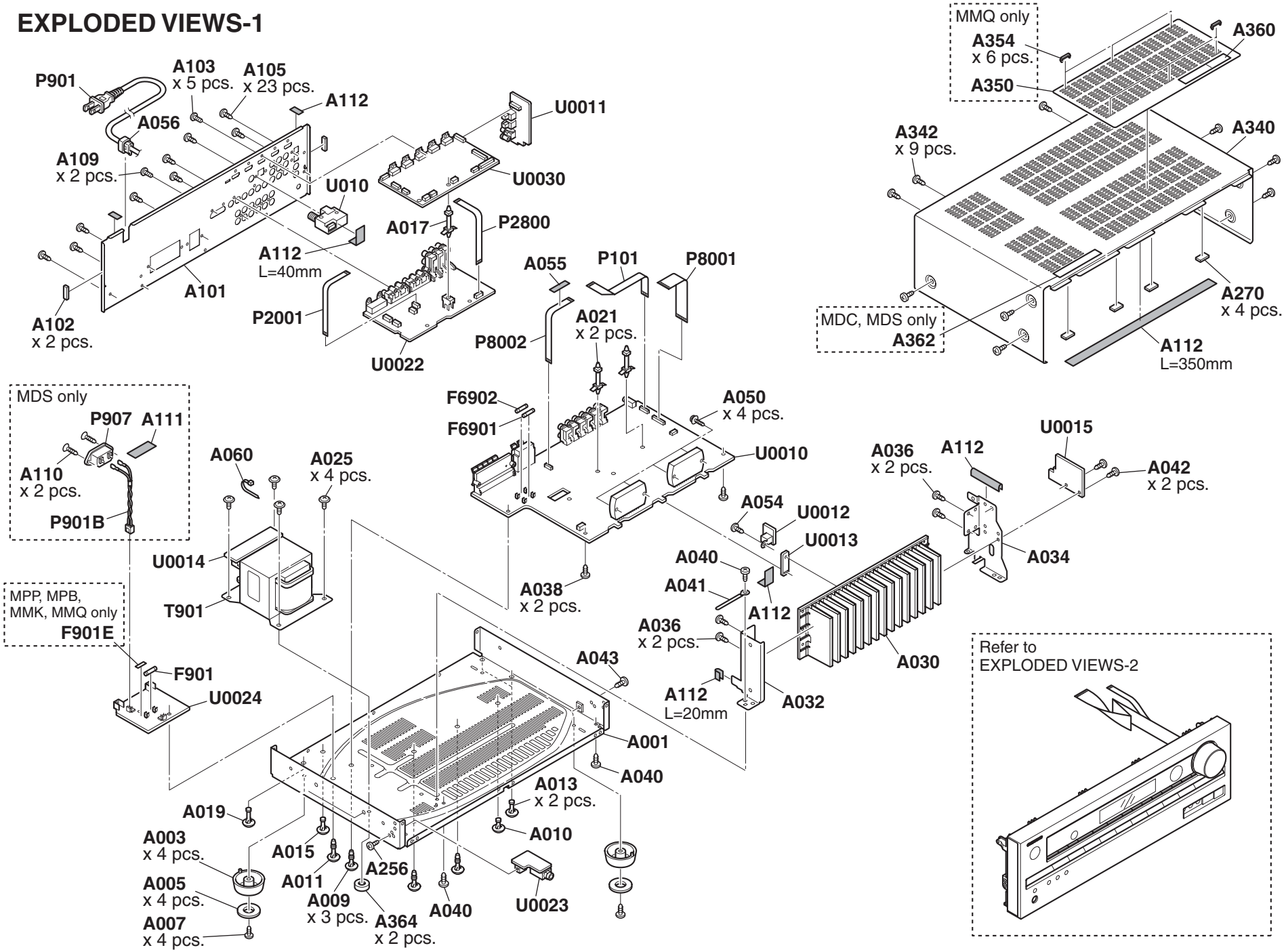

EXPLODED VIEWS-2

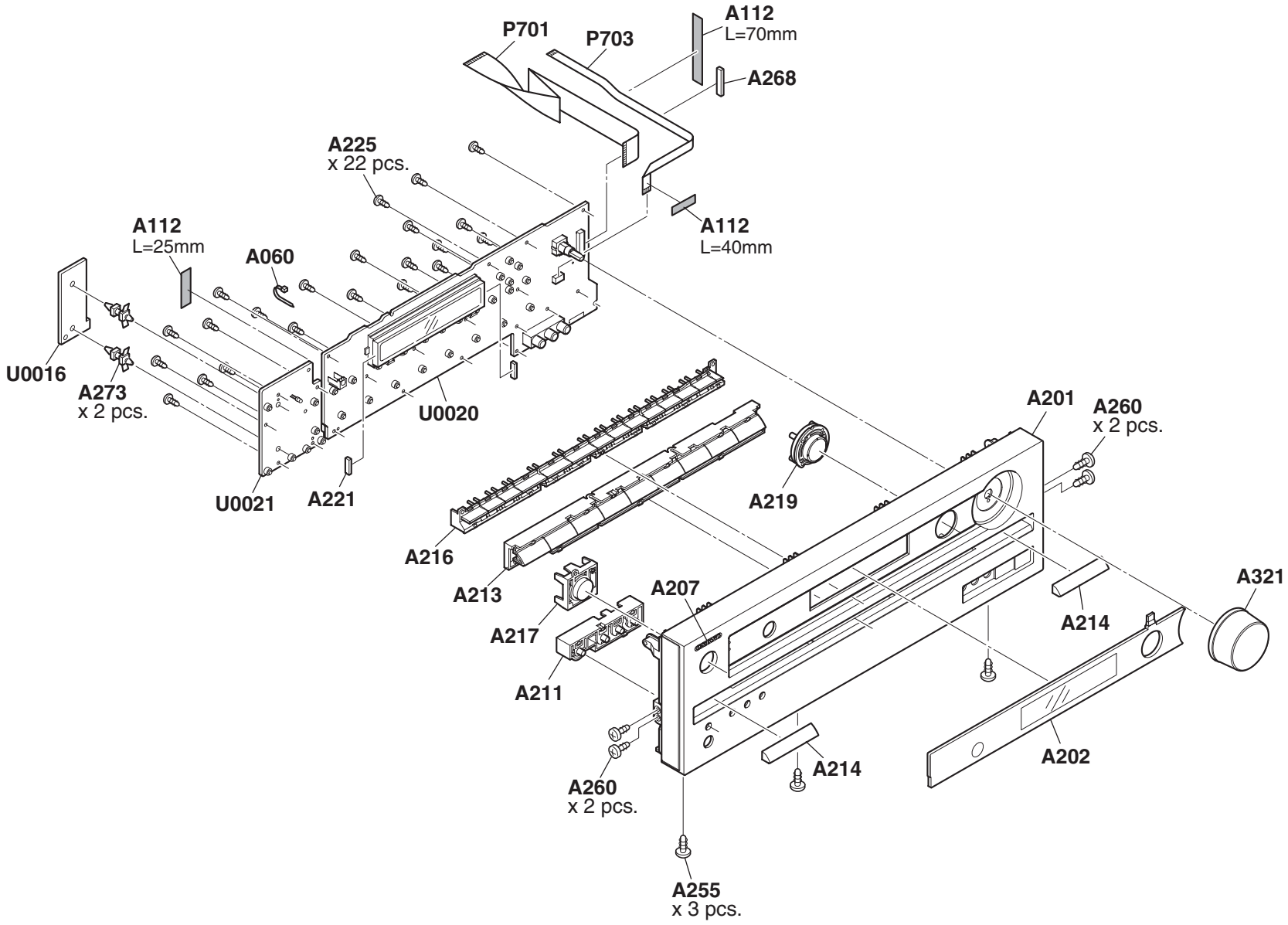

SCHEMATIC DIAGRAM/ BLOCK DIAGRAM-01

BLOCK DIAGRAM
AUDIO SECTION PART-1

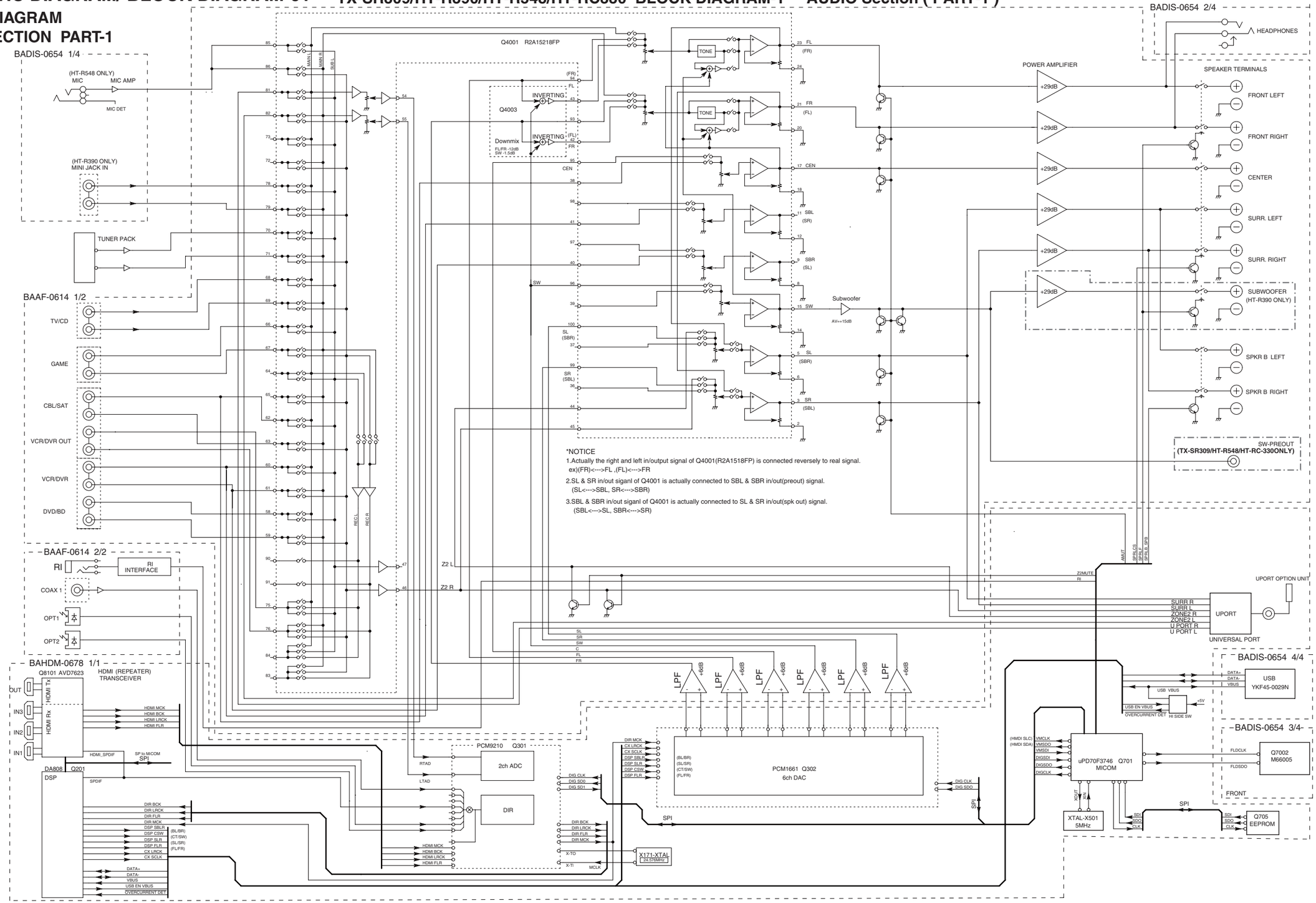

SCHEMATIC DIAGRAM/ BLOCK DIAGRAM-1

BLOCK DIAGRAM
AUDIO SECTION PART-1

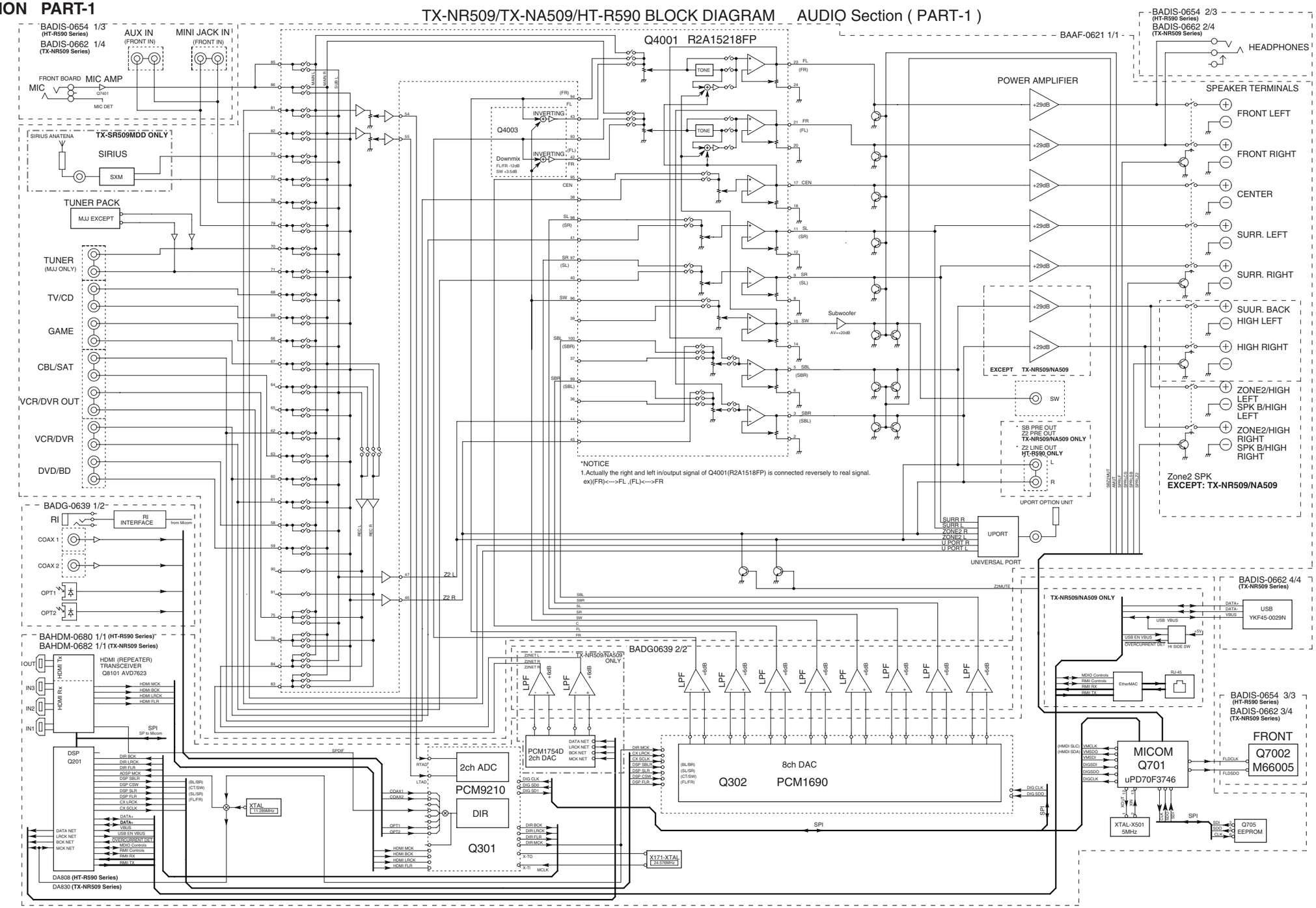

SCHEMATIC DIAGRAM/ BLOCK DIAGRAM-1
BLOCK DIAGRA
AUDIO SECTION PART-1

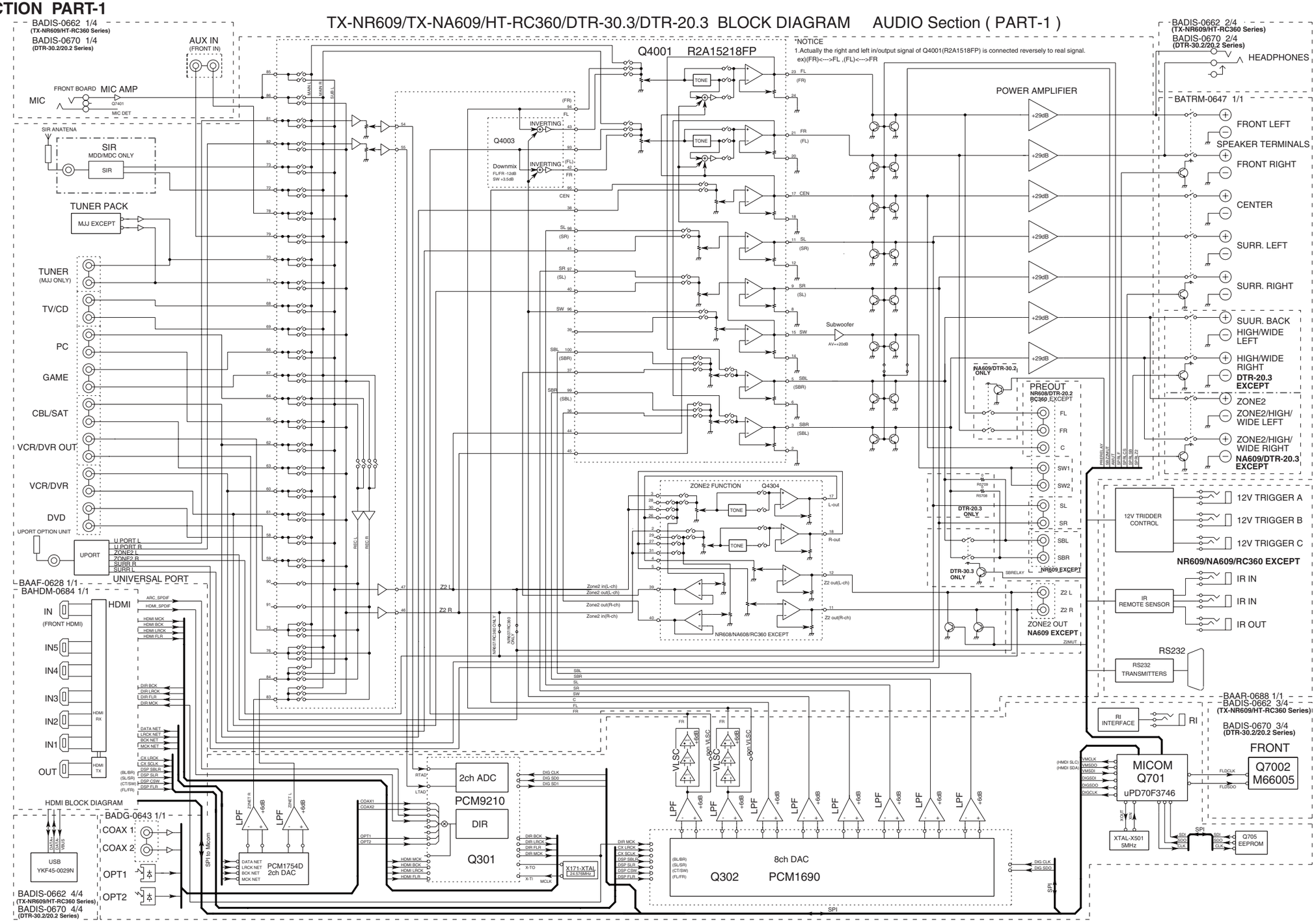

SCHEMATIC DIAGRAM/ BLOCK DIAGRAM-1

BLOCK DIAGRAM AUDIO SECTION PART-1

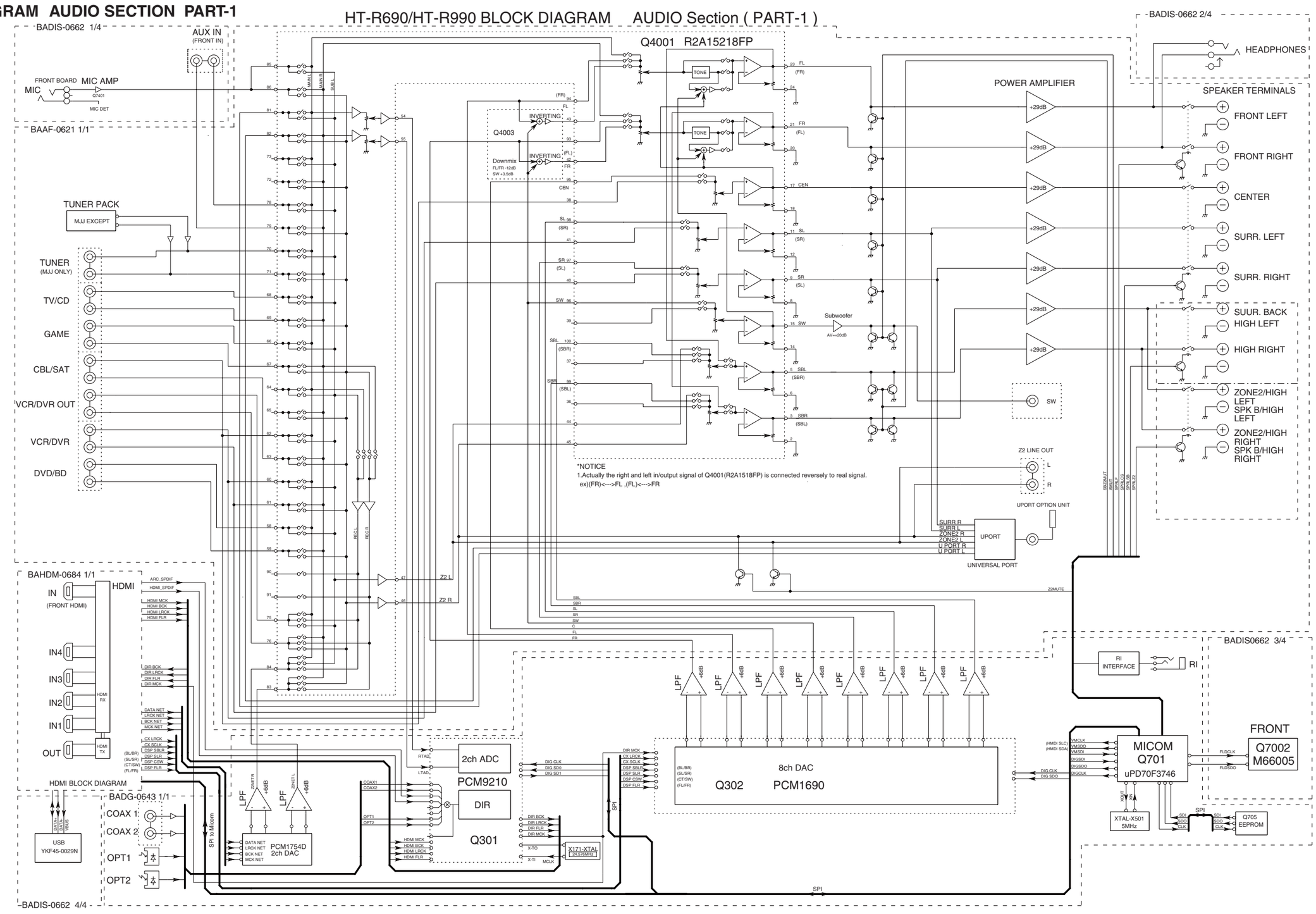

SCHEMATIC DIAGRAM/ BLOCK DIAGRAM-2

BLOCK DIAGRAM VIDEO SECTION PART-2

Model No. TX-SR309/509/609/TX-SA509/609/HT-R290/390/548/590/690/990/HT-RC330/360/DTR-20.3/30.3

SCHEMATIC DIAGRAM (PART-2)

BLOCK DIAGRAM(VIDEO)

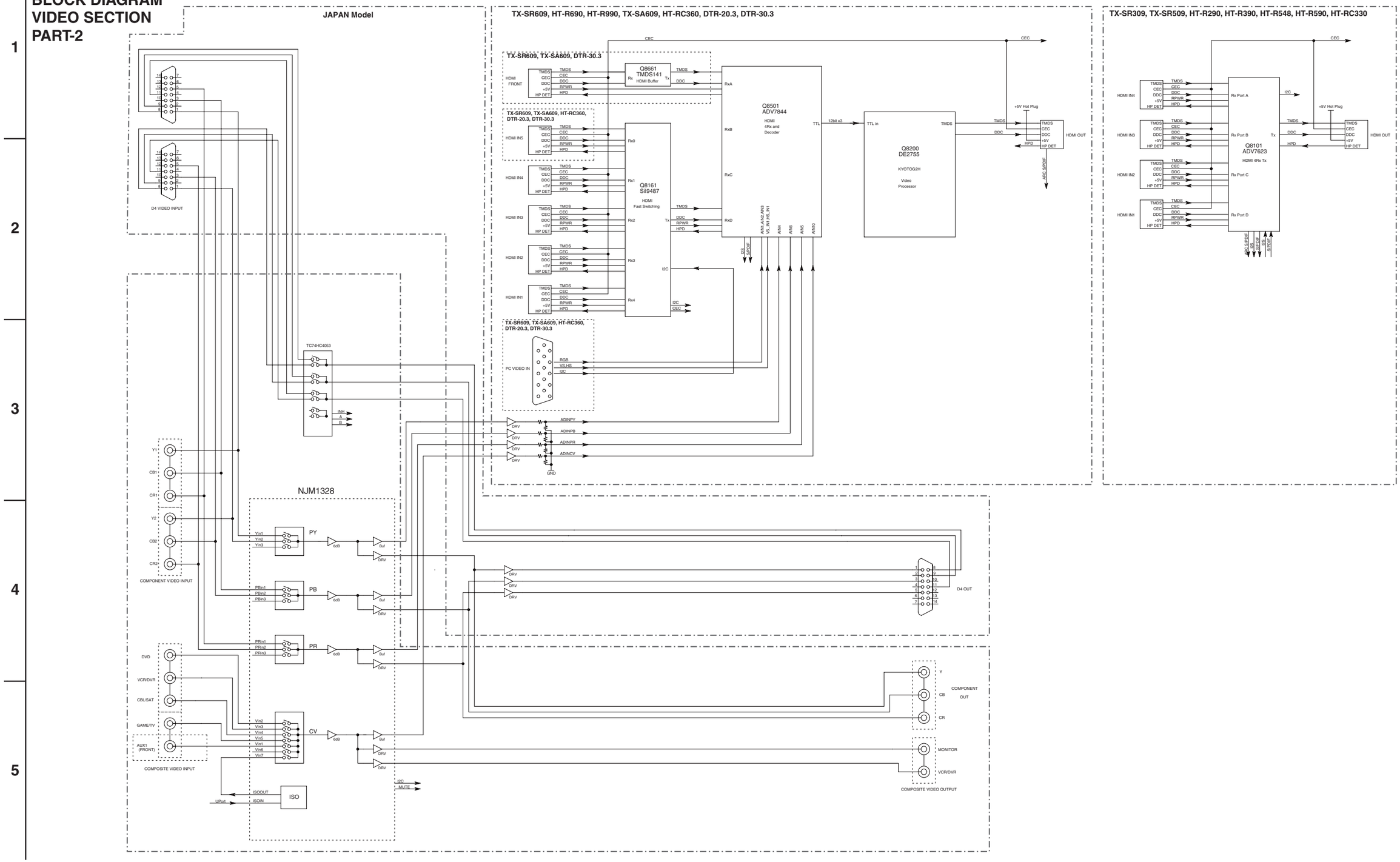

TX-SR309/HT-R390/HT-R548/HT-RC330/HT-R290

SCHEMATIC DIAGRAM/ BLOCK DIAGRAM-3

AUDIO INPUT SECTION PART-3

MODEL NO. TX-SR309/HT-R390/HT-R548/HT-RC330/HT-R290 SCHEMATIC DIAGRAM (PART-3) AUDIO INPUT

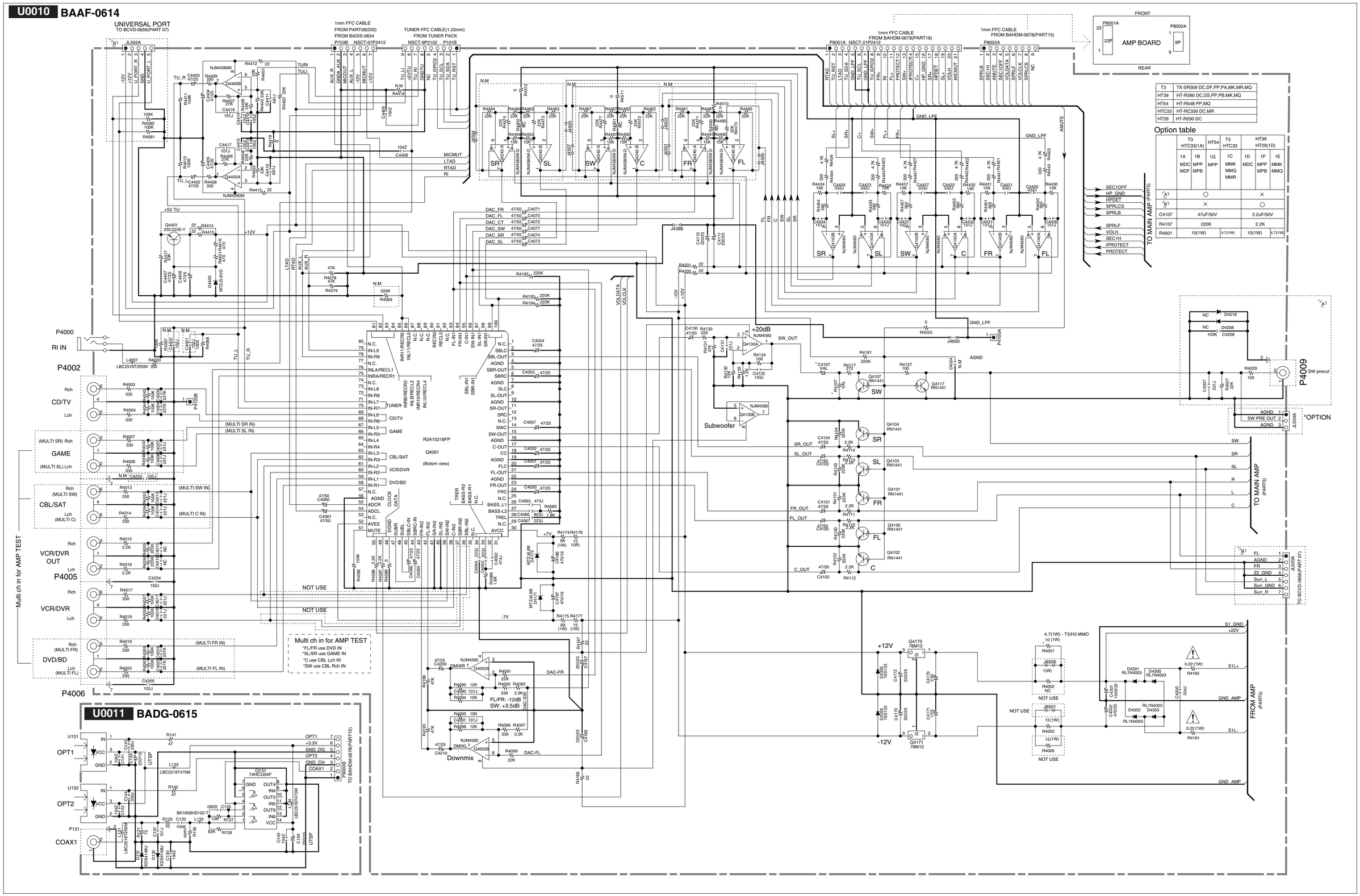

TX-NR509/TX-NR579/TX-NA579/ HT-R590/HT-R690/HT-R990

SCHEMATIC DIAGRAM/ BLOCK DIAGRAM-3

AUDIO INPUT SECTION PART-3

MODEL NO. TX-NR509/ TX-NR579/ TX-NA579/ HT-R590/ HT-R690/ HT-R990 SCHEMATIC DIAGRAM (PART-3)

AUDIO INPUT

U0010 BAAF-0621

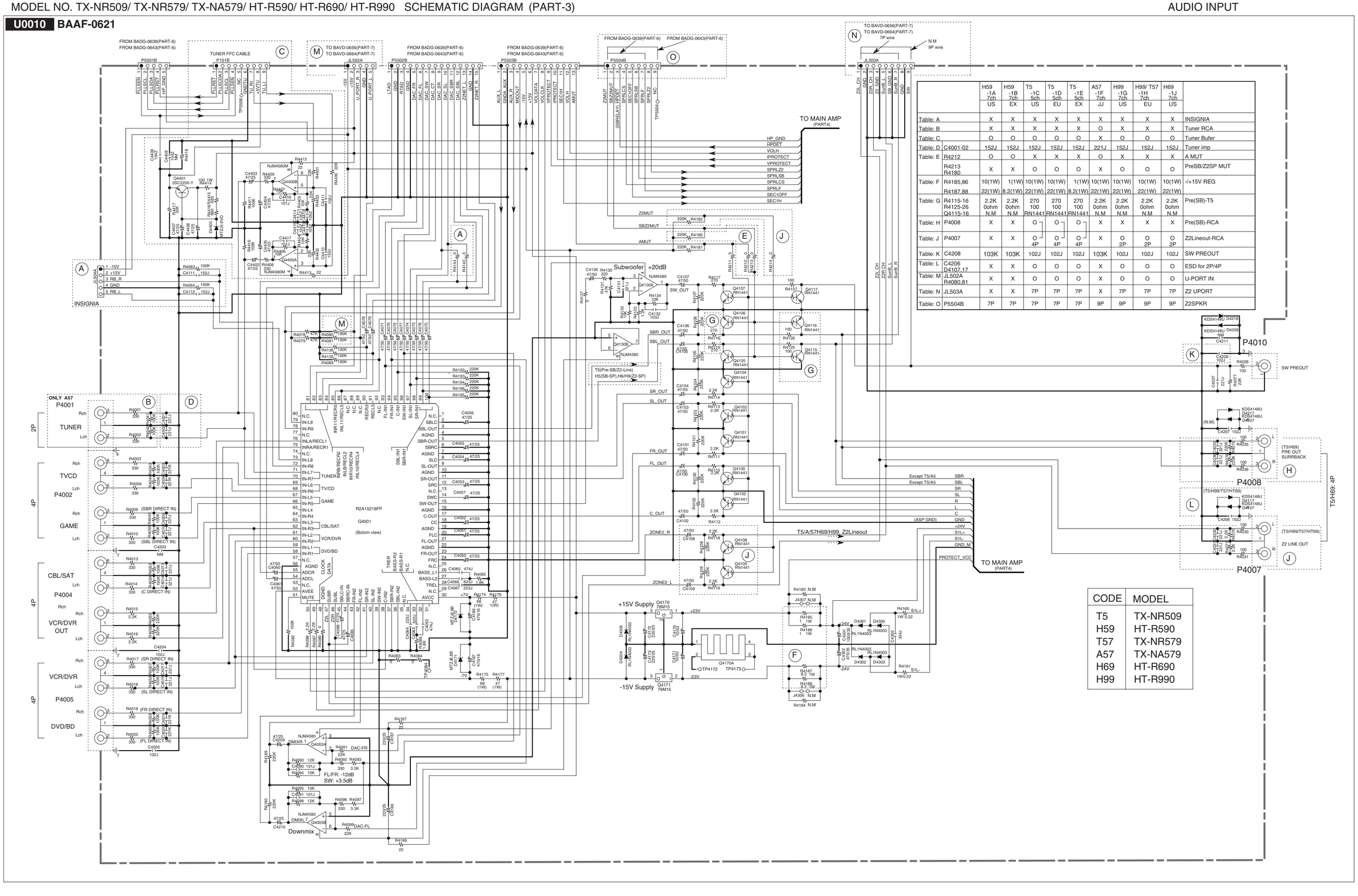

		H59 -1A 7ch US	H59 -1B 7ch EX	T5 -1C 5ch US	T5 -1D 5ch EU	T5 -1E 5ch EX	A57 -1F 7ch JJ	H99 -1G 7ch US	H99/ T57 -1H 7ch EU	H69 -1J 7ch US	
Table: A		X	X	X	X	X	X	X	X	X	INSIGNIA
Table: B		X	X	X	X	X	O	X	X	X	Tuner RCA
Table: C		O	O	O	O	O	X	O	O	O	Tuner Bufer
Table: D	C4001-02	152J	152J	152J	152J	152J	221J	152J	152J	152J	Tuner imp
Table: E	R4212	O	O	X	X	X	O	X	X	X	A MUT
	R4213 R4180	X	X	O	O	O	X	O	O	O	PreSB/Z2SP MUT
Table: F	R4185,86 R4187,88	10(1W) 22(1W)	1(1W) 8.2(1W)	10(1W) 22(1W)	10(1W) 22(1W)	1(1W) 8.2(1W)	10(1W) 22(1W)	10(1W) 22(1W)	10(1W) 22(1W)	10(1W) 22(1W)	-/+15V REG
Table: G	R4115-16 R4125-26 Q4115-16	2.2K 0ohm N.M	2.2K 0ohm N.M	270 100 RN1441	270 100 RN1441	270 100 RN1441	2.2K 0ohm N.M	2.2K 0ohm N.M	2.2K 0ohm N.M	2.2K 0ohm N.M	Pre(SB)-T5
Table: H	P4008	X	X	O	O	O	X	X	X	X	Pre(SB)-RCA
Table: J	P4007	X	X	O 4P	O 4P	O 4P	X	O 2P	O 2P	O 2P	Z2Lineout-RCA
Table: K	C4208	103K	103K	102J	102J	102J	103K	102J	102J	102J	SW PREOUT
Table: L	C4206 D4107,17	X	X	O	O	O	X	O	O	O	ESD for 2P/4P
Table: M	JL502A R4080,81	X	X	O	O	O	X	O	O	O	U-PORT IN
Table: N	JL503A	X	X	7P	7P	7P	X	7P	7P	7P	Z2 UPORT
Table: O	P5504B	7P	7P	7P	7P	7P	9P	9P	9P	9P	Z2SPKR

CODE	MODEL
T5	TX-NR509
H59	HT-R590
T57	TX-NR579
A57	TX-NA579
H69	HT-R690
H99	HT-R990

TX-NR609/TX-NA609/HT-RC360/DTR-30.3/DTR-20.3

SCHEMATIC DIAGRAM/ BLOCK DIAGRAM-3

AUDIO INPUT SECTION PART-3

MODEL NO. TX-NR609/NA609/HT-RC360/DTR-20.3/DTR-30.3 SCHEMATIC DIAGRAM (PART-3) AUDIO INPUT

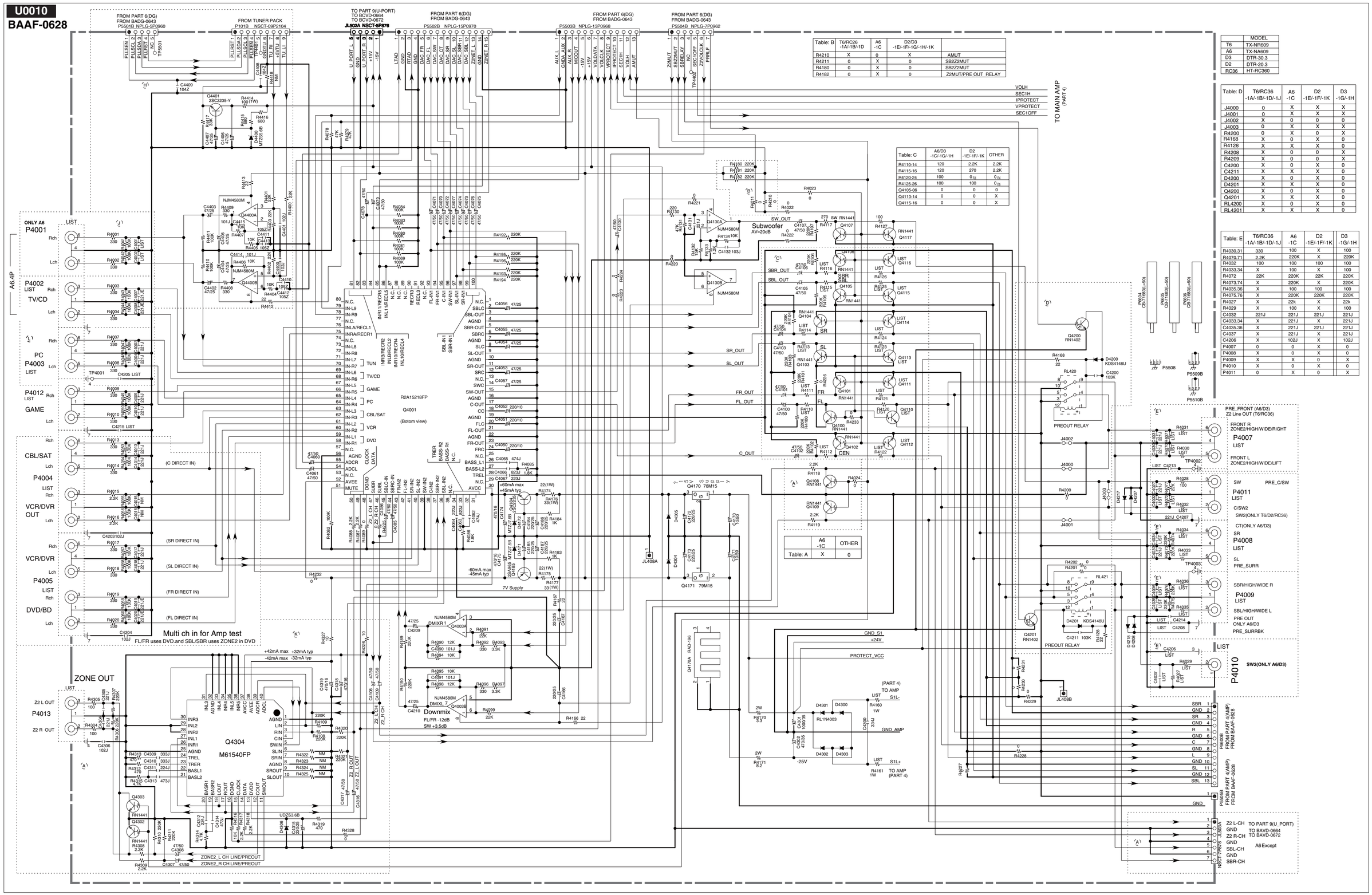

Table: B	T6/RC26 -1A/-1B/-1D	A6 -1C	D2/D3 -1E/-1F/-1G/-1H/-1K	
R4210	X	0	X	AMUT
R4211	0	X	0	SB2Z2MUT
R4180	0	X	0	SB2Z2MUT
R4182	0	X	0	Z2MUT/PRE OUT RELAY

Table: C	A6/D3 -1C/-1G/-1H	D2 -1E/-1F/-1K	OTHER
R4110-14	120	2.2K	2.2K
R4115-16	120	270	2.2K
R4120-24	100	0 Ω	0 Ω
R4125-26	100	100	0 Ω
Q4105-06	0	0	0
Q4110-14	0	0	X
Q4115-16	0	0	X

	MODEL
T6	TX-NR609
A6	TX-NA609
D3	DTR-30.3
D2	DTR-20.3
RC36	HT-RC360

Table: D	T6/RC36 -1A/-1B/-1D/-1J	A6 -1C	D2 -1E/-1F/-1K	D3 -1G/-1H
J4000	0	X	X	X
J4001	0	X	X	X
J4002	X	0	0	0
J4003	0	X	X	X
R4200	0	X	0	X
R4168	X	0	X	0
R4128	X	X	X	0
R4208	X	0	0	X
R4209	X	0	0	X
C4200	X	0	X	0
C4211	X	X	X	0
D4200	X	0	X	0
D4201	X	X	X	0
Q4200	X	0	X	0
Q4201	X	X	X	0
RL4200	X	0	X	0
RL4201	X	X	X	0

Table: E	T6/RC36 -1A/-1B/-1D/-1J	A6 -1C	D2 -1E/-1F/-1K	D3 -1G/-1H
R4030.31	330	100	X	100
R4070.71	2.2K	220K	X	220K
R4032	100	100	100	100
R4033.34	X	100	X	100
R4072	22K	220K	22K	220K
R4073.74	X	220K	X	220K
R4035.36	X	100	100	100
R4075.76	X	220K	220K	220K
R4027	X	22k	X	22k
R4029	X	100	X	100
C4032	221J	221J	221J	221J
C4033.34	X	221J	X	221J
C4035.36	X	221J	221J	221J
C4037	X	221J	X	221J
C4206	X	102J	X	102J
P4007	0	0	X	0
P4008	X	0	X	0
P4009	X	0	X	0
P4010	X	0	X	0
P4011	0	X	0	X

Table: A	A6 -1C	OTHER
	X	0

	T6		A6	RC36		D2			D3		
	-1A	-1B	-1C	-1D	-1J	-1E	-1F	-1K	-1G	-1H	
Table: H	0	0	X	0	0	0	0	0	0	0	TUNER PACK
Table: A	X	X	X	X	X	0	0	0	0	0	ZONE2 PREOUT
Table: L	0	0	0	X	X	0	0	0	0	0	PC INPUT
Table: M	2.2	0.22	2.2	2.2	0.22	2.2	0.22	2.2	2.2	0.22	1W

Table: J	A6 -1C	OHTER
R4001-02	0	X
R4041-42	0	X
C4001-02	221J	152J
P4001	0	X
P4002	X	0

TX-NR509/TX-NR579/TX-NA579/HT-R590/HT-R690/HT-R990

SCHEMATIC DIAGRAM/ BLOCK DIAGRAM-4

AMP. SECTION PART-4

MODEL NO. TX-NR509/ TX-NR579/ TX-NA579/ HT-R590/ HT-R690/ HT-R990 SCHEMATIC DIAGRAM (Part-4) AMP SECTION

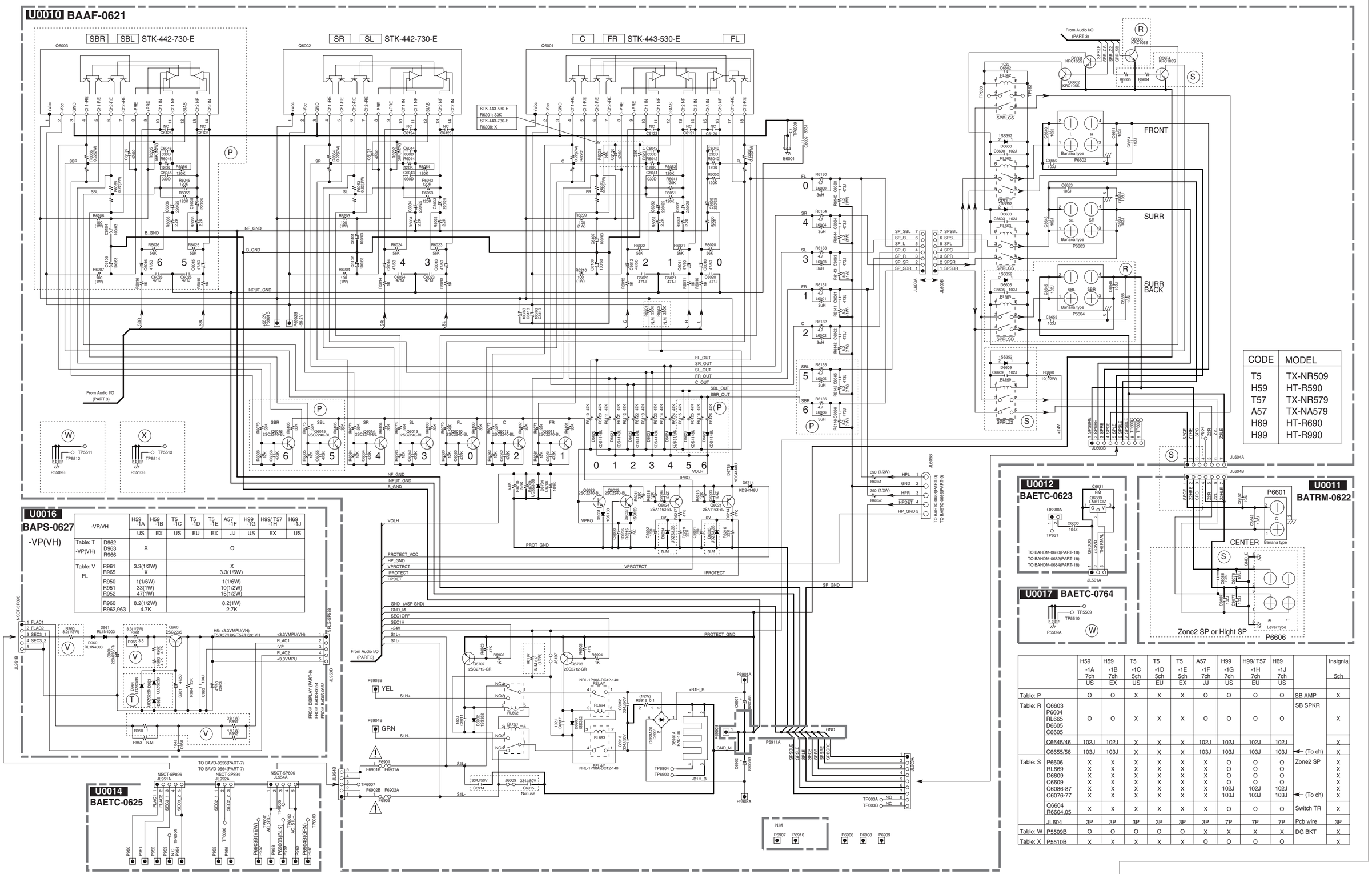

CODE	MODEL
T5	TX-NR509
H59	HT-R590
T57	TX-NR579
A57	TX-NA579
H69	HT-R690
H99	HT-R990

	-VP/VH	H59 -1A	H59 -1B	T5 -1C	T5 -1D	T5 -1E	A57 -1F	H99 -1G	H99/ T57 -1H	H69 -1J
		US	EX	US	EU	EX	JJ	US	EX	US
Table: T -VP(VH)	D962 D963 R966	X		O						
Table: V FL	R961 R965	3.3(1/2W) X		X 3.3(1/6W)						
	R950 R951 R952	1(1/6W) 33(1W) 47(1W)		1(1/6W) 10(1/2W) 15(1/2W)						
	R960 R962,963	8.2(1/2W) 4.7K		8.2(1W) 2.7K						

		H59 -1A 7ch US	H59 -1B 7ch EX	T5 -1C 5ch US	T5 -1D 5ch EU	T5 -1E 5ch EX	A57 -1F 7ch JJ	H99 -1G 7ch US	H99/ T57 -1H 7ch EU	H69 -1J 7ch US		Insignia 5ch
Table: P		O	O	X	X	X	O	O	O	O	SB AMP	X
Table: R	Q6603 P6604 RL665 D6605 C6605	O	O	X	X	X	O	O	O	O	SB SPKR	X
	C6645/46	102J	102J	X	X	X	102J	102J	102J	102J		X
	C6655/56	103J	103J	X	X	X	103J	103J	103J	103J	← (To ch)	X
Table: S	P6606	X	X	X	X	X	X	O	O	O	Zone2 SP	X
	RL669	X	X	X	X	X	X	O	O	O		X
	D6609	X	X	X	X	X	X	O	O	O		X
	C6609	X	X	X	X	X	X	O	O	O		X
	C6086-87	X	X	X	X	X	X	102J	102J	102J		X
	C6076-77	X	X	X	X	X	X	103J	103J	103J	← (To ch)	X
	Q6604 R6604,05	X	X	X	X	X	X	O	O	O	Switch TR	X
	JL604	3P	3P	3P	3P	3P	3P	7P	7P	7P	Pcb wire	3P
Table: W	P5509B	O	O	O	O	O	X	X	X	X	DG BKT	X
Table: X	P5510B	X	X	X	X	X	O	O	O	O		X

TX-NR609/TX-NA609/HT-RC360/DTR-20.3/DTR-30.3

SCHEMATIC DIAGRAM/ BLOCK DIAGRAM-4

AMP. SECTION PART-4

MODEL NO. TX-NR609/NA609/HT-RC360/DTR-20.3/DTR-30.3 SCHEMATIC DIAGRAM (PART-4) AMP SECTION

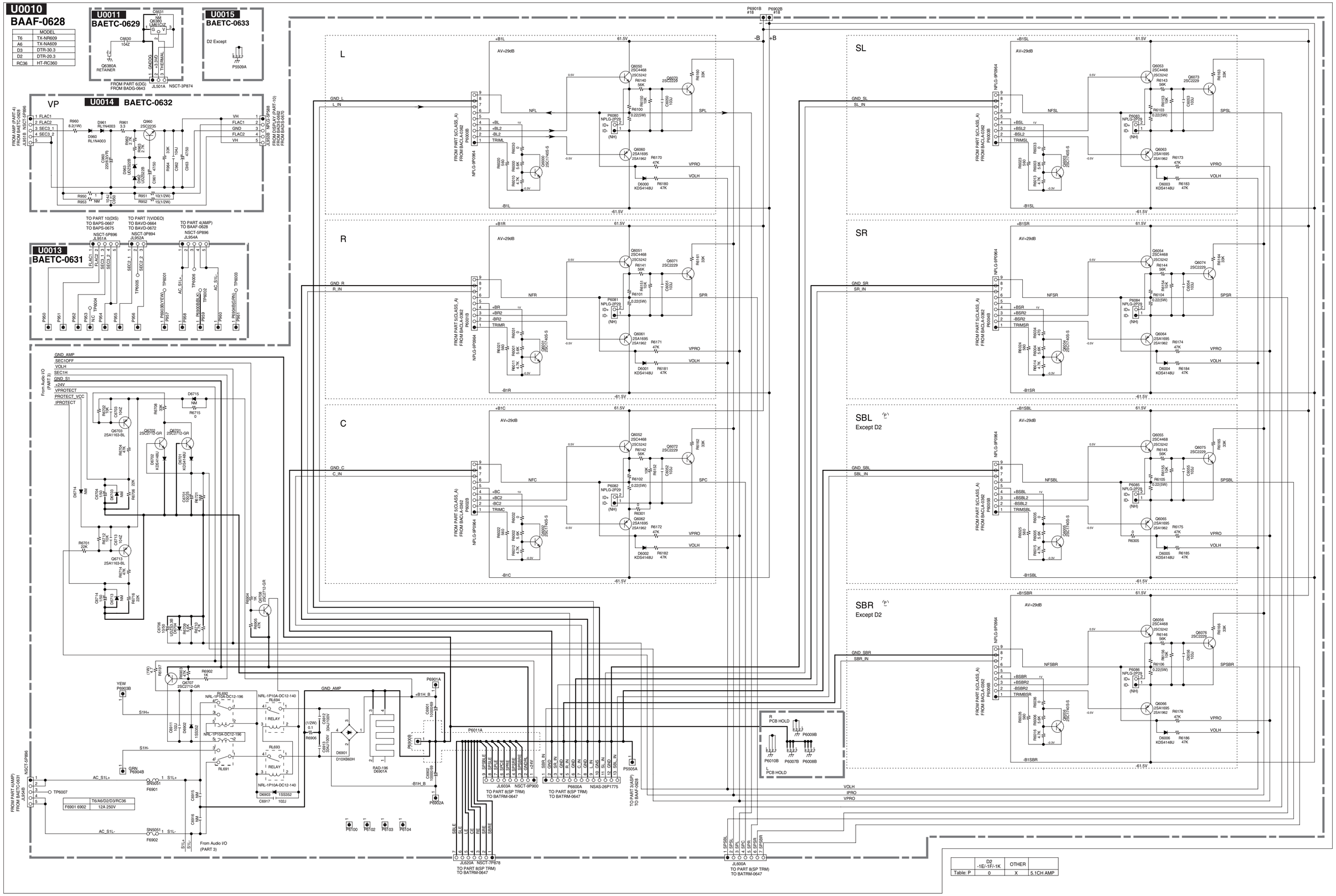

	MODEL
T6	TX-NR609
A6	TX-NA609
D3	DTR-30.3
D2	DTR-20.3
RC36	HT-RC360

F6901 6902	T6/A6/D2/D3/RC36
	12A 250V

	D2 -1E/-1F/-1K	OTHER	
Table: P	0	X	5.1CH AMP

TX-SR309/HT-R390/HT-R548/HT-RC330/HT-R290

SCHEMATIC DIAGRAM/ BLOCK DIAGRAM-4

AMP. SECTION PART-4

Model No. TX-SR309/HT-R390/HT-R548/HT-RC330/HT-R290
SCHEMATIC DIAGRAM (Part-4) AMP SECTION

U0010
BAAF-0614

Notes
THE COMPONENTS IDENTIFIED BY MARK ⚠ ARE CRITICAL FOR SAFETY.
REPLACE ONLY WITH PART NUMBER SPECIFIED.
VOLTAGE(MEASUREDWITHVOLTMETER) IS DCVOLTAGE
(NO INPUT SIGNAL in HT-R340MPP)
ELECTROLYTIC CAPACITORS( ) ARE IN uF/WV.
EX)030:3pF 330:33pF 331:330pF 333:0.033uF
CIRCUIT IS SUBJECT TO CHANGE FOR IMPROVEMENT.
ALL CAPACITORS ARE IN pF/50WV UNLESS OTHERWISE NOTED.

CAUTION
ADVERTENCIA
RISK OF FIRE OR ELECTRIC SHOCK.
REPLACE ONLY WITH SAME TYPE FUSE
FOR CONTINUED PROTECTION AGAINST FIRE HAZARD, REPLACE ONLY WITH FUSE OF SAME TYPE AND RATING INDICATED.

ATTENTIION
AFIN D'ASSURER UNE PROTECTION CONTRE LES RISQUES DE FEU ET DE CHOCS D'INCENDIE, REMPLACER UNIQUEMENT PAR UN FUSIBLE DE MEME TYPE ET CALIBRATION COMME INDIQUE.

THIS SYMBOL LOCATED NEAR THE FUSE INDICATES THAT THE FUSE USED IS SLOW OPERATING TYPE FOR CONTINUED PROTECTION AGAINST FIRE FUSE HAZARD.REPLACE WITH SAME TYPE FUSE. FOR FUSE RATING REFER TO THE MAKING ADJACENT TO THE SYMBOL.

CE SYMBOLE INDIQUE QUE LE FUSIBLE UTILISE EST A LENT. E POUR UNE PROTECTION PERMANENTE IK UTILISER QUE DES FUSIBLES DE MEME TYPE. CE DARNIER EST INDIQUE LA QU LE PRESENT SYMBOL EST APPOSE.

T3	TX-SR309 DC,DF,PP,PA,MK,MR,MQ
HT39	HT-R390 DC,DS,PP,PB,MK,MQ
HT54	HT-R548 PP,MQ
HTC33	HT-RC330 DC,MR
HT29	HT-R290 DC

MODEL	Power Trans
T3/HTC33 1A, HT29/HT39 1D	NPT-1603D
T3 1B/HT39 1F/HT54 1G	NPT-1603P
T3/HTC33 1C,HT39 1E/HT54 1H	NPT-1603M

Destination table

	T3/HT54/HTC33				HT39/HT29		
	-1A	-1B/-1G	-1C/-1H		-1D	-1F	-1E
	MDC MDF	MPP MPA	MMK MMQ MMR		MDD MDF	MPP MPB	MMQ MMK
A B C D E F	×				○		
G	○				×		
Q6002	STK-442-730-E				STK-443-530-E		
J6477	○				×		
P6001	NTM-10PDML				NTM-12PDML		
C6901 C6902	8200u 56V	8200u 63V	8200u 56V	8200u 63V			

*Q6001/Q6002 Terminal Voltage

PIN NO.	Q6001/Q6002
1	+49V
2	-49V
4,5,6,7	0V
17,18(1)	0V
8	-46V
9	+46V
12	-45V
10,11,13,14	-0.16V
15,16(1)	-0.16V

(1)N.A for T3(Q6002)

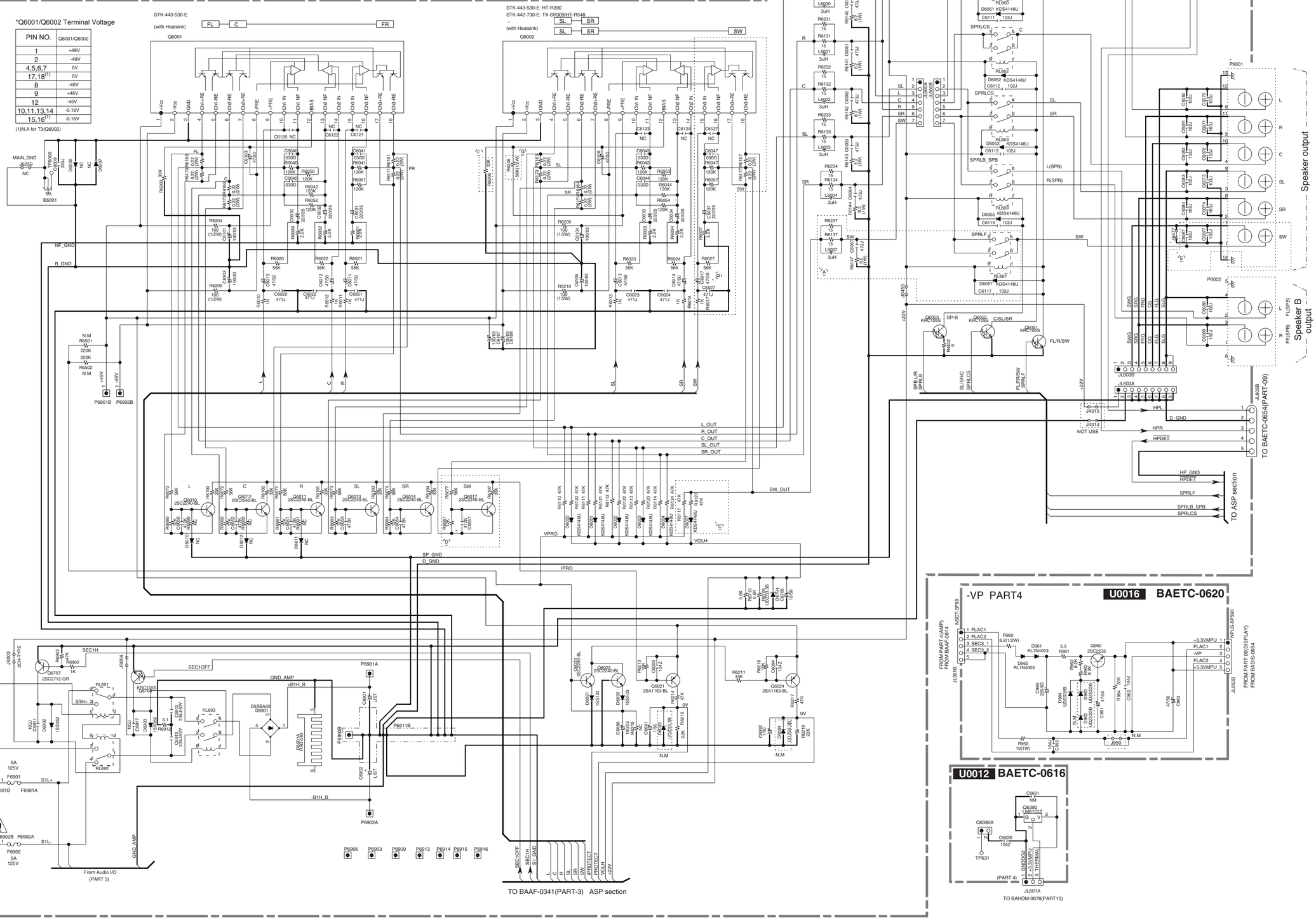

U0014 BAETC-0618

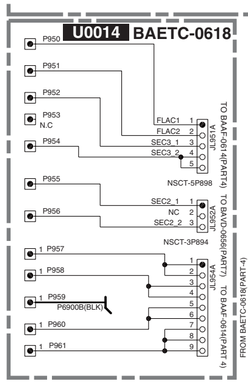

U0016 BAETC-0620

-VP PART4

U0012 BAETC-0616

SCHEMATIC DIAGRAM/ BLOCK DIAGRAM-5

AMP. (Input stage) SECTION PART-5

Model No. TX-SR609, TX-SA609, HT-RC360, DTR-20.3, DTR-30.3 SCHEMATIC DIAGRAM (Part-5) AMP(input stage) SECTION

U0060

BACLA-0362

CODE	MODEL
T6	TX-SR609
A6	TX-SA609
H26	HT-RC360
D2	DTR-20.3
D3	DTR-30.3

IDLING CURRENT ADJUSTMENT
1. Wait for 4 - 6 minutes after power on. (Heat running)
2. Re-adjust the trimming resistors according to the following values.

Adjustment point	Measured value	Re-adjustment value
R6040 ~ R6046	In case below 6 mV →	6 mV
	In case 6 - 8 mV →	8 mV
	In case 8 - 12 mV →	No re-adjustment
	In case over 12mV →	12 mV

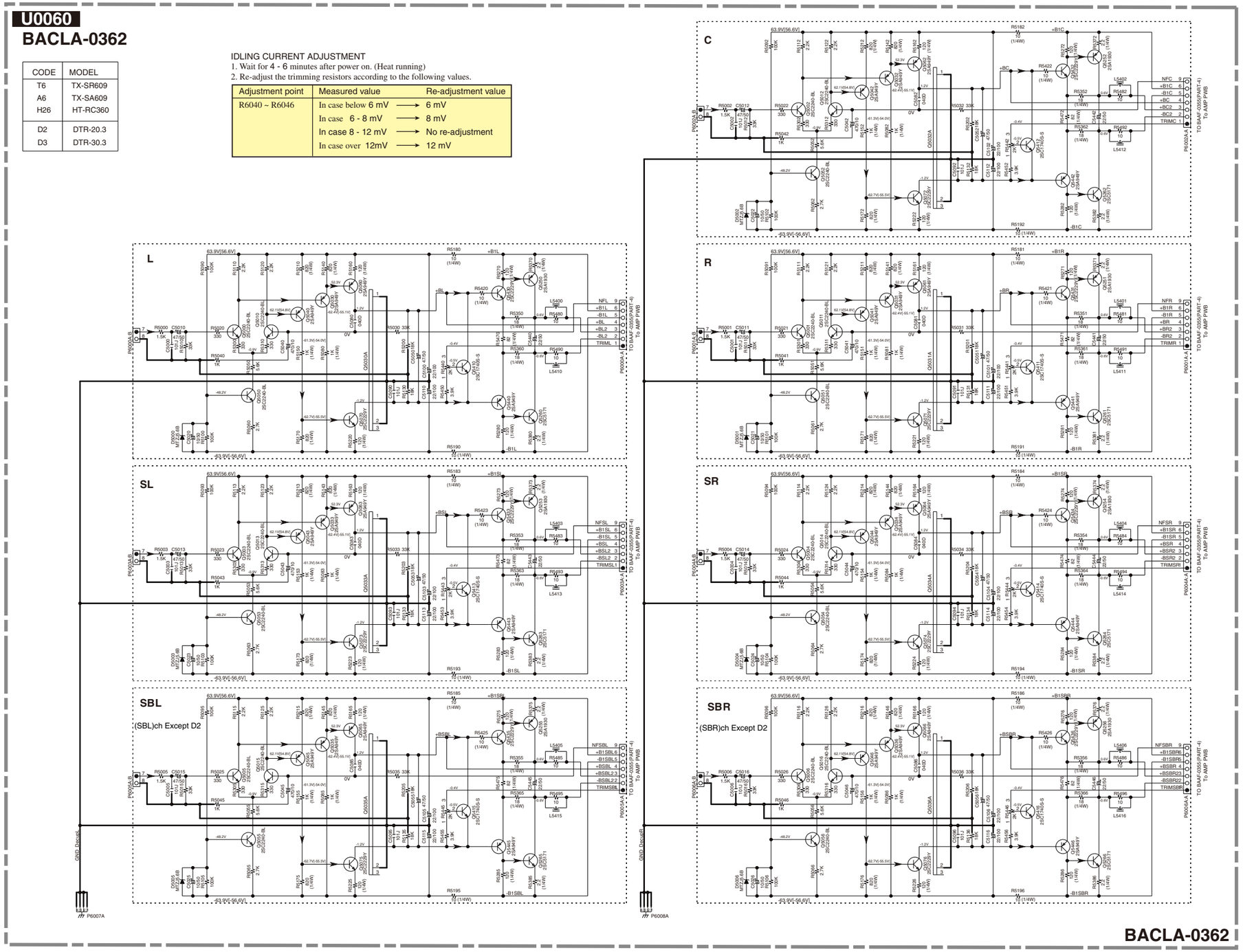

BACLA-0362

SCHEMATIC DIAGRAM/ BLOCK DIAGRAM-6

DG_ A SECTION PART-6

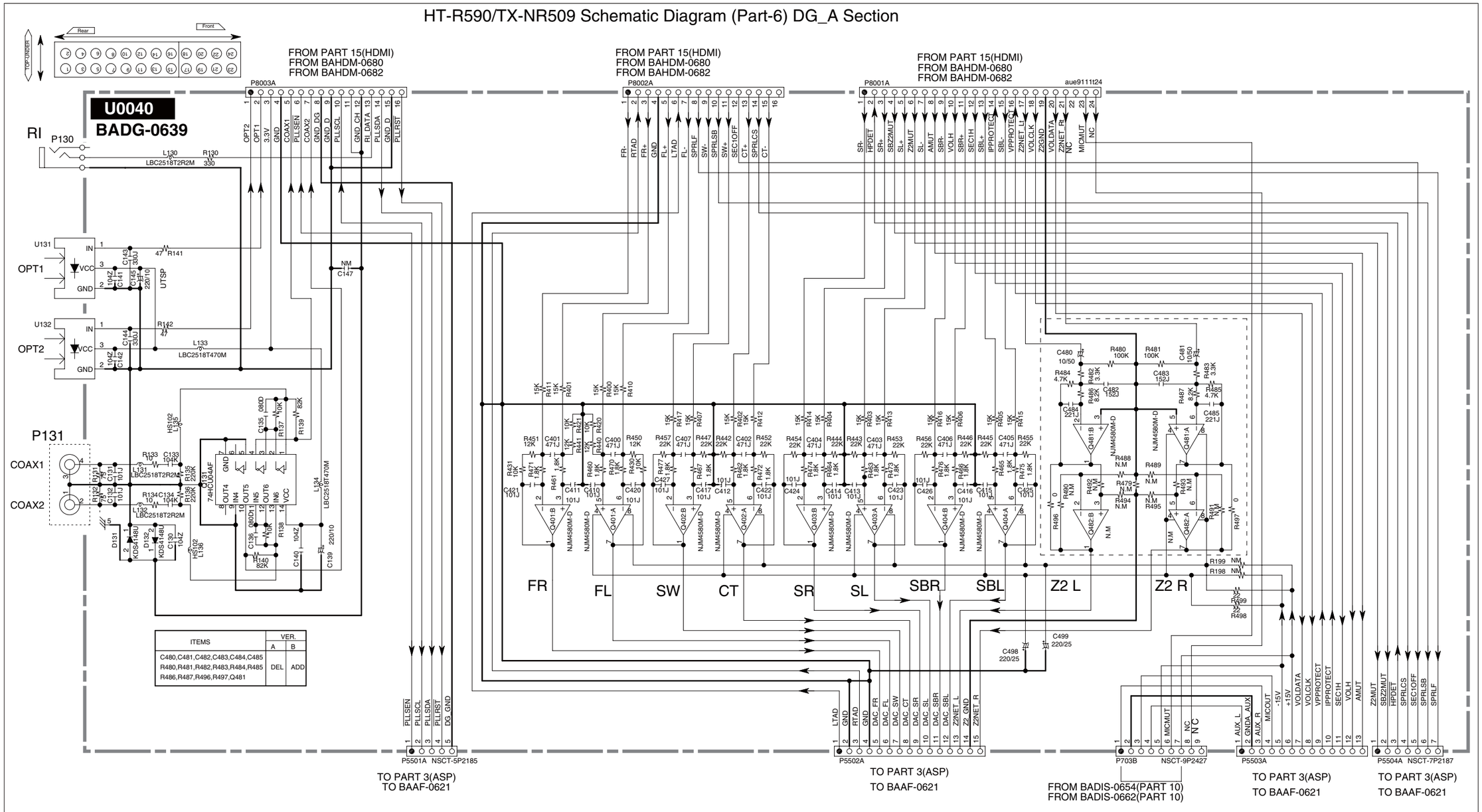

ITEMS	VER. A	VER. B
C480,C481,C482,C483,C484,C485	DEL	ADD
R480,R481,R482,R483,R484,R485		
R486,R487,R496,R497,Q481		

TX-NR579/TX-NA579/TX-NR609/TX-NA609/DTR-20.3/DTR-30.3/HT-R690/HT-R990/HT-RC360

SCHEMATIC DIAGRAM/ BLOCK DIAGRAM-6

DIGITAL IN/ DAC/ MPU SECTION
PART-6

TX-NR579/TX-NA579/TX-NR609/TX-NA609/DTR-20.3/DTR-30.3/HT-R690/HT-R990/HT-RC360
Schematic Diagram (Part-6)

DIGITAL IN/DAC/MPU SECTION

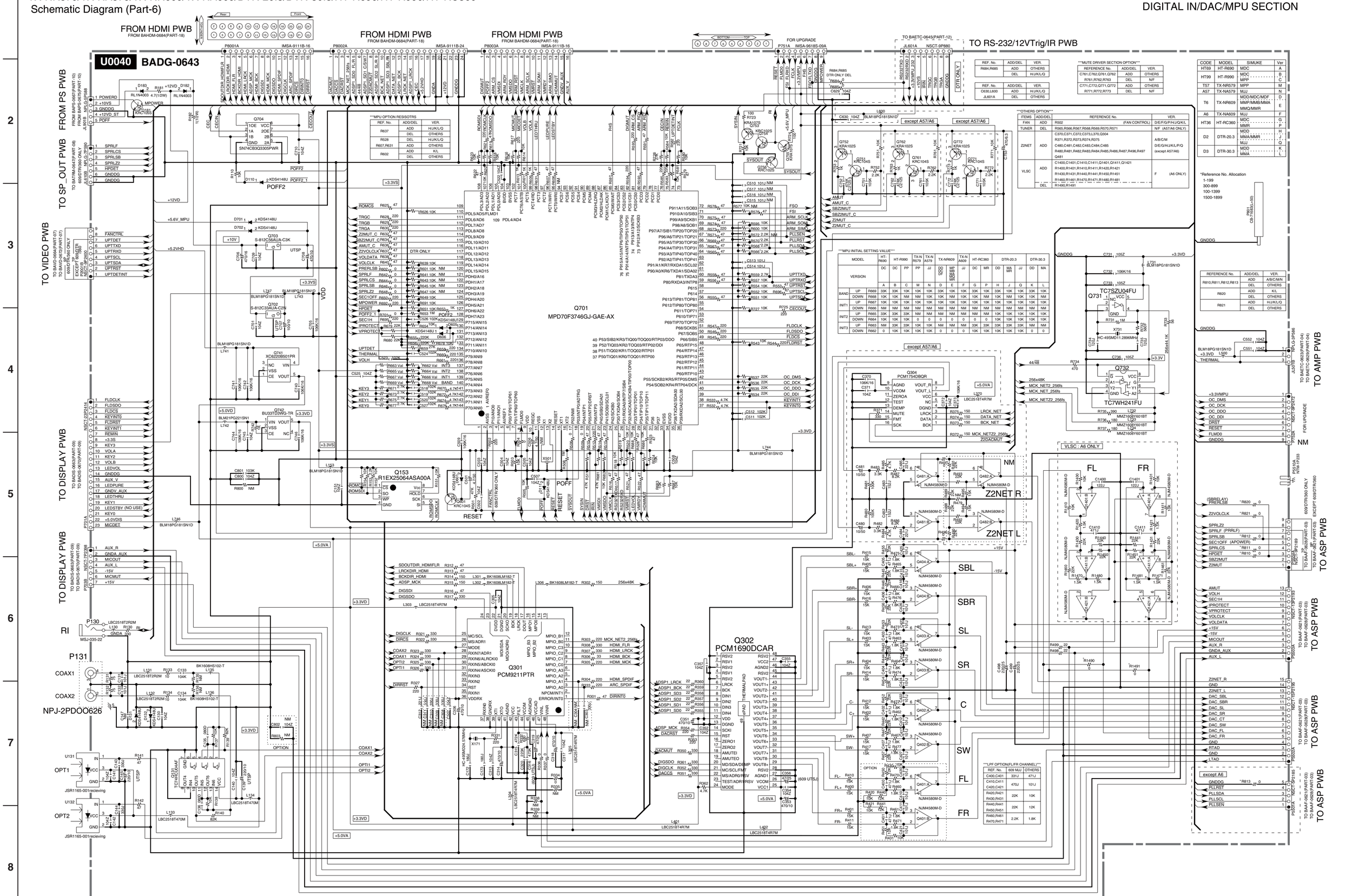

SCHEMATIC DIAGRAM/ BLOCK DIAGRAM-7

VIDEO SECTION PART-7

MODEL No. TX-NR509/ TX-NA509/ HT-R590/ HT-R690/ HT-R990/TX-NR609/ TX-NA609/ HT-RC360/ DTR-20.3/ DTR-30.3 SCHEMATIC DIAGRAM(Part-7) VIDEO SECTION

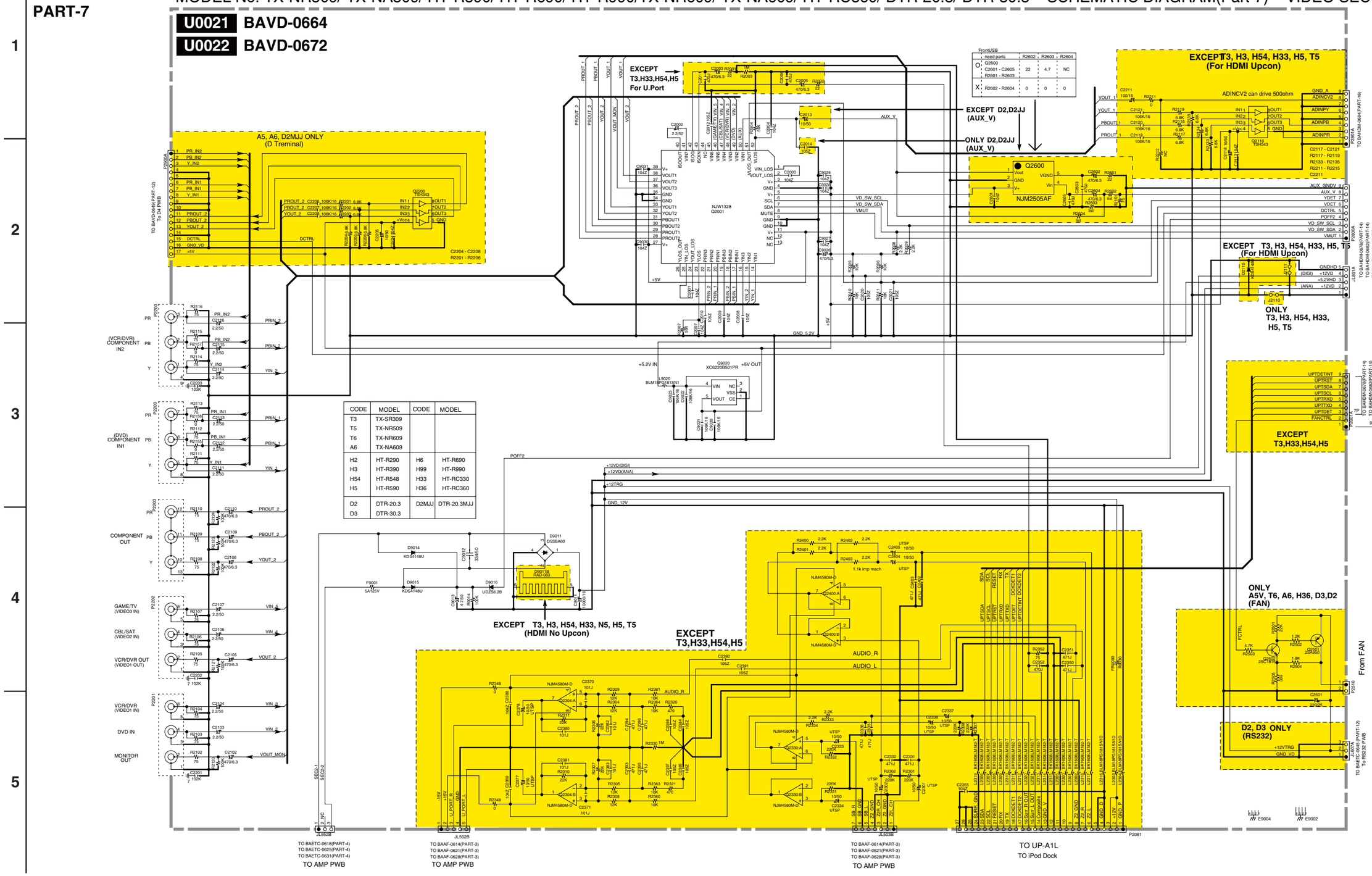

CODE	MODEL	CODE	MODEL
T3	TX-SR309		
T5	TX-NR509		
T6	TX-NR609		
A6	TX-NA609		
H2	HT-R290	H6	HT-R690
H3	HT-R390	H99	HT-R990
H54	HT-R548	H33	HT-RC330
H5	HT-R590	H36	HT-RC360
D2	DTR-20.3	D2MJJ	DTR-20.3MJJ
D3	DTR-30.3		

TX-SR309/HT-R390/HT-R548/HT-RC330

SCHEMATIC DIAGRAM/ BLOCK DIAGRAM-7

VIDEO SECTION PART-7

MODEL No. TX-SR309/ HT-R390/ HT-R548/ HT-RC330 SCHEMATIC DIAGRAM (Part-7) VIDEO SECTION

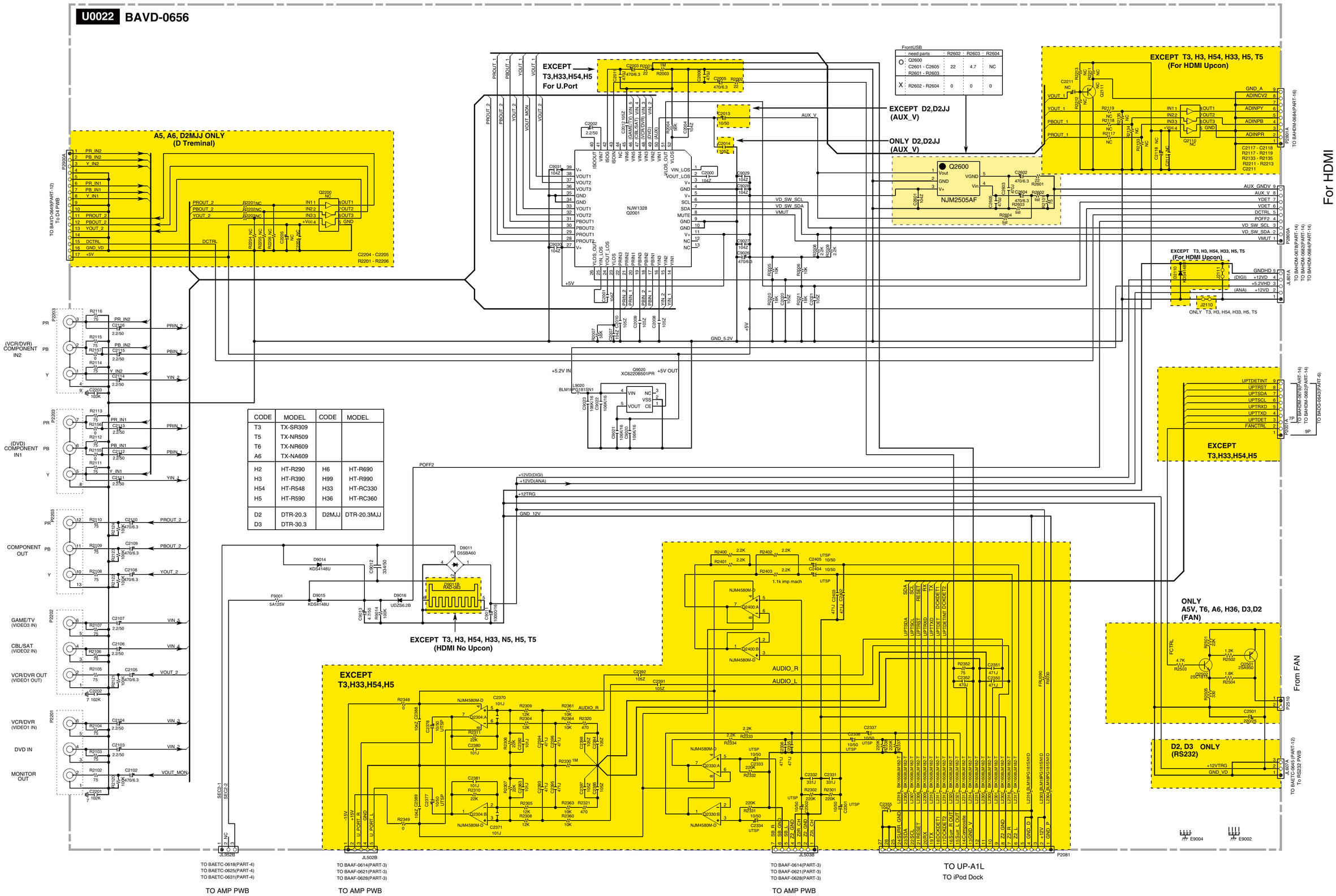

CODE	MODEL	CODE	MODEL
T3	TX-SR309		
T5	TX-NR509		
T6	TX-NR609		
A6	TX-NA609		
H2	HT-R290	H6	HT-R690
H3	HT-R390	H99	HT-R990
H54	HT-R548	H33	HT-RC330
H5	HT-R590	H36	HT-RC360
D2	DTR-20.3	D2MJJ	DTR-20.3MJJ
D3	DTR-30.3		

FrontUSB need parts	R2602	R2603	R2604
O: Q2600 C2601 - C2605 R2601 - R2603	22	4.7	NC
X: R2602 - R2604	0	0	0

SCHEMATIC DIAGRAM/ BLOCK DIAGRAM-8

SPEAKER OUT SECTION PART-8

MODEL No. TX-NR609/NA609/HT-RC360/DTR-20.3/30.3 SCHEMATIC DIAGRAM (PART-8) SP-OUT SECTION

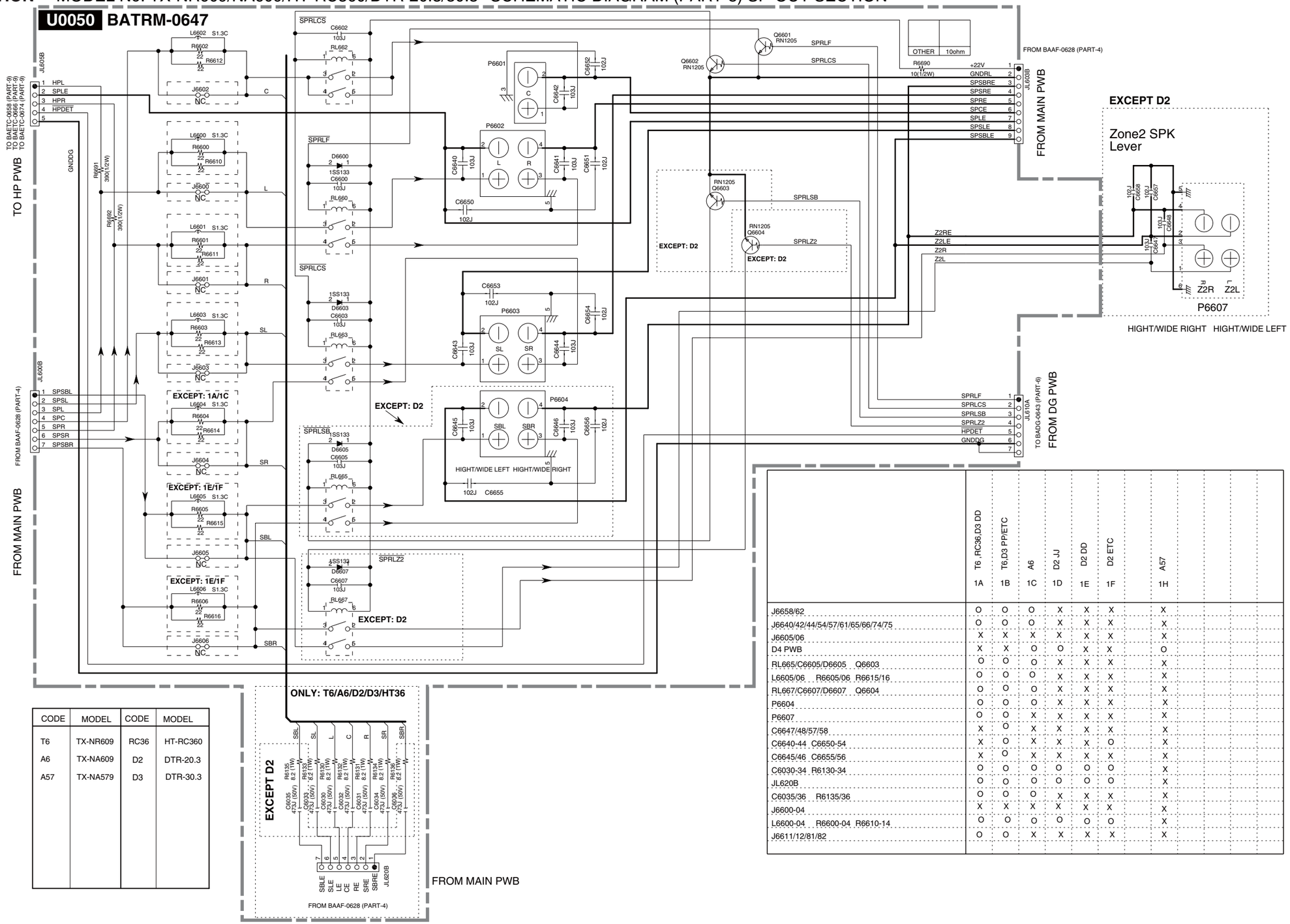

CODE	MODEL	CODE	MODEL
T6	TX-NR609	RC36	HT-RC360
A6	TX-NA609	D2	DTR-20.3
A57	TX-NA579	D3	DTR-30.3

	T6 ,RC36,D3 DD 1A	T6,D3 PP/ETC 1B	A6 1C	D2 JJ 1D	D2 DD 1E	D2 ETC 1F		A57 1H				
J6658/62	O	O	O	X	X	X		X				
J6640/42/44/54/57/61/65/66/74/75	O	O	O	X	X	X		X				
J6605/06	X	X	X	X	X	X		X				
D4 PWB	X	X	O	O	X	X		O				
RL665/C6605/D6605 Q6603	O	O	O	X	X	X		X				
L6605/06 R6605/06 R6615/16	O	O	O	X	X	X		X				
RL667/C6607/D6607 Q6604	O	O	O	X	X	X		X				
P6604	O	O	O	X	X	X		X				
P6607	O	O	X	X	X	X		X				
C6647/48/57/58	X	O	X	X	X	X		X				
C6640-44 C6650-54	X	O	X	X	X	O		X				
C6645/46 C6655/56	X	O	X	X	X	X		X				
C6030-34 R6130-34	O	O	O	O	O	O		X				
JL620B	O	O	O	O	O	O		X				
C6035/36 R6135/36	O	O	O	X	X	X		X				
J6600-04	X	X	X	X	X	X		X				
L6600-04 R6600-04 R6610-14	O	O	O	O	O	O		X				
J6611/12/81/82	O	O	X	X	X	X		X				

SCHEMATIC DIAGRAM/ BLOCK DIAGRAM-9

DISPLAY SECTION PART-9

Model No. TX-NR309/HT-R290/390/548/590/HT-RC330 Schematic Diagram (Part-9) Display Section

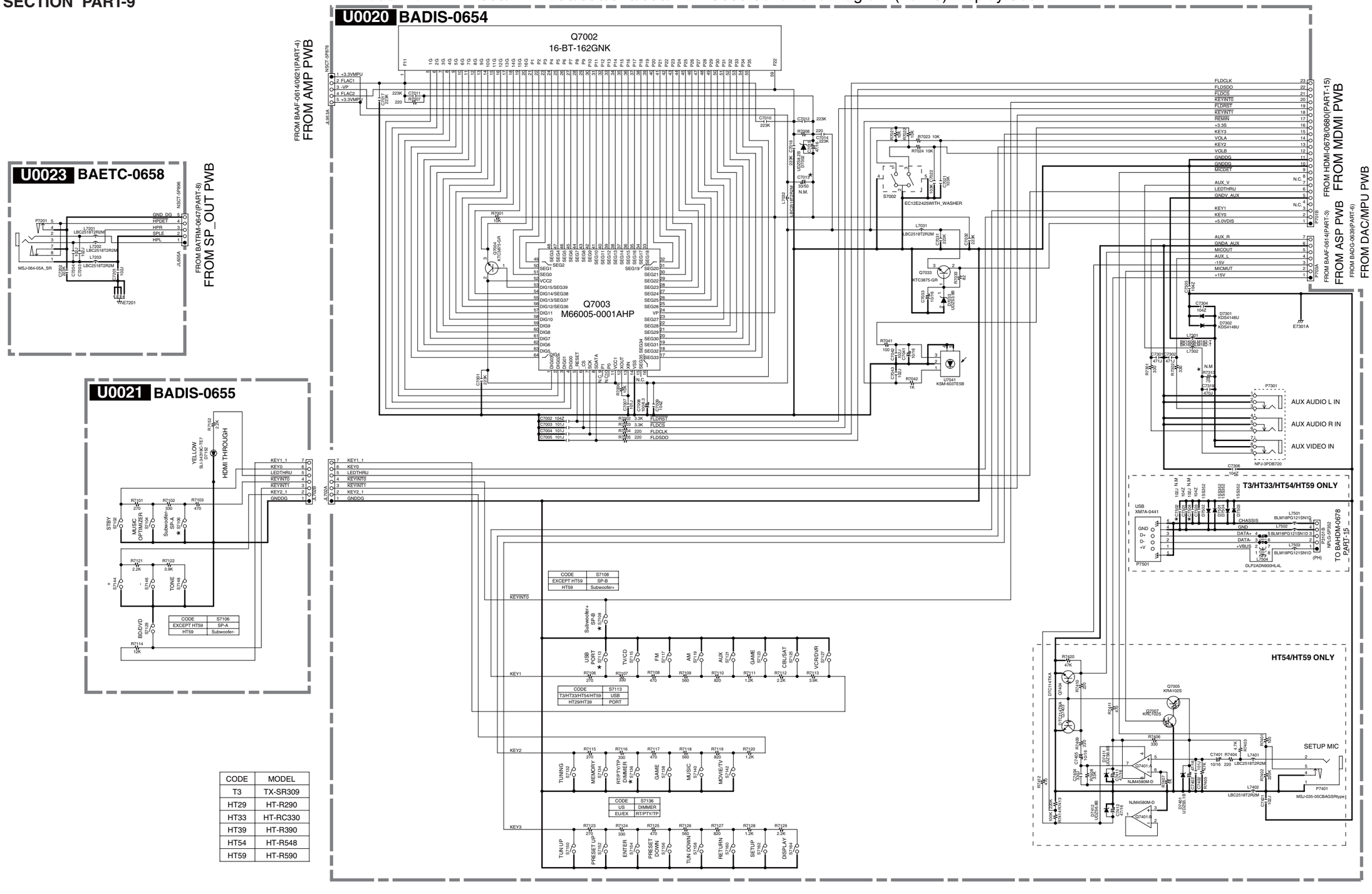

CODE	S7108
EXCEPT HT59	SP-B
HT59	Subwoofer+

CODE	S7106
EXCEPT HT59	SP-A
HT59	Subwoofer-

CODE	S7113
T3/HT33/HT54/HT59	USB
HT29/HT39	PORT

CODE	S7136
US	DIMMER
EU/EX	RT/PTY/TP

CODE	MODEL
T3	TX-SR309
HT29	HT-R290
HT33	HT-RC330
HT39	HT-R390
HT54	HT-R548
HT59	HT-R590

SCHEMATIC DIAGRAM/ BLOCK DIAGRAM-9

DISPLAY SECTION PART-9

Model No. TX-NR509/609/HT-R690/990/HT-RC360 Schematic Diagram (Part-9) Display Section

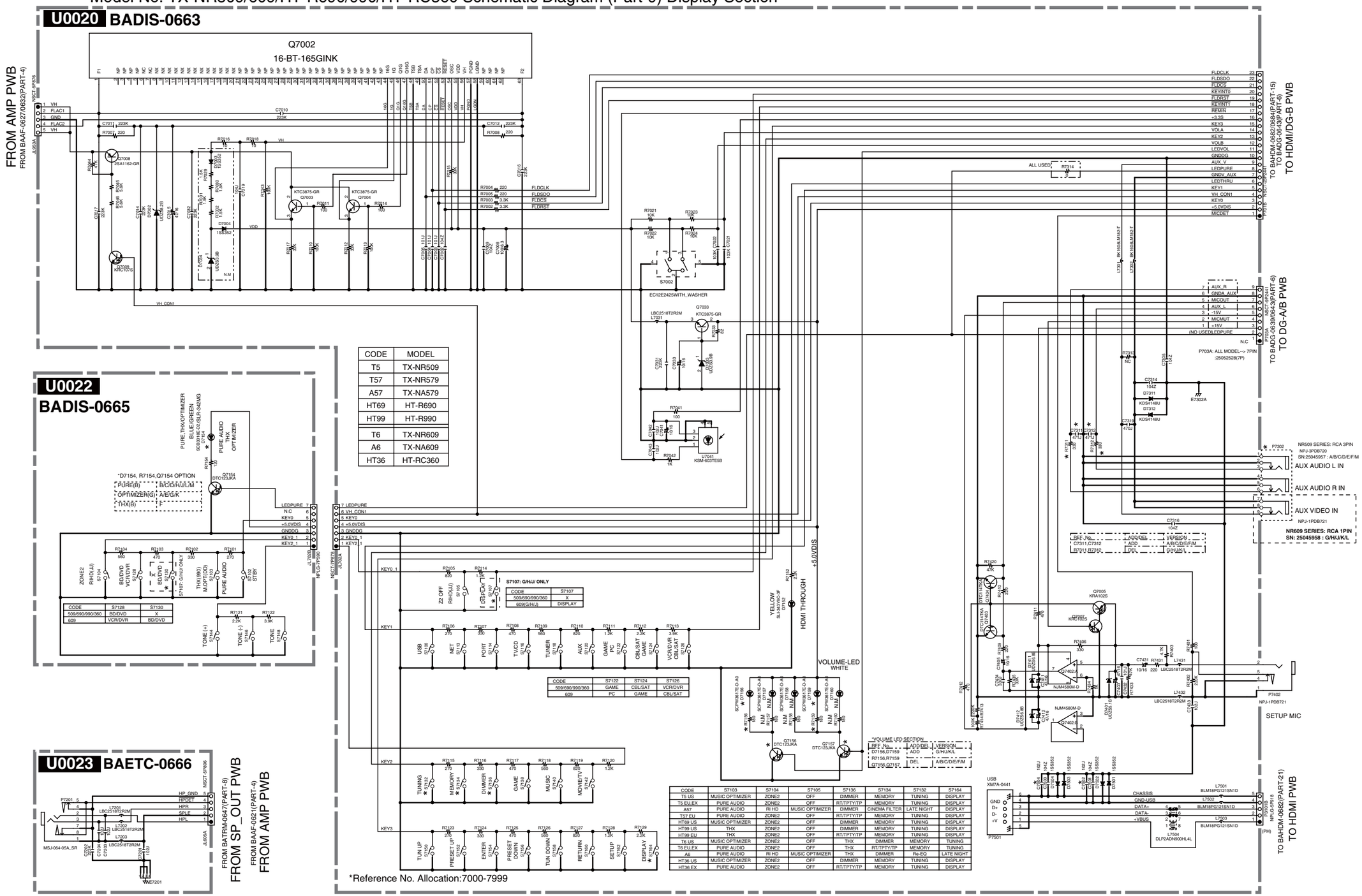

CODE	MODEL
T5	TX-NR509
T57	TX-NR579
A57	TX-NA579
HT69	HT-R690
HT99	HT-R990
T6	TX-NR609
A6	TX-NA609
HT36	HT-RC360

CODE	S7103	S7104	S7105	S7136	S7134	S7132	S7164
T5 US	MUSIC OPTIMIZER	ZONE2	OFF	DIMMER	MEMORY	TUNING	DISPLAY
T5 EU,EX	PURE AUDIO	ZONE2	OFF	RT/TPTV/TP	MEMORY	TUNING	DISPLAY
A57	PURE AUDIO	RI HD	MUSIC OPTIMIZER	DIMMER	CINEMA FILTER	LATE NIGHT	DISPLAY
T57 EU	PURE AUDIO	ZONE2	OFF	RT/TPTV/TP	MEMORY	TUNING	DISPLAY
HT69 US	MUSIC OPTIMIZER	ZONE2	OFF	DIMMER	MEMORY	TUNING	DISPLAY
HT99 US	THX	ZONE2	OFF	DIMMER	MEMORY	TUNING	DISPLAY
HT99 EU	THX	ZONE2	OFF	RT/TPTV/TP	MEMORY	TUNING	DISPLAY
T6 US	MUSIC OPTIMIZER	ZONE2	OFF	THX	DIMMER	MEMORY	TUNING
T6 EU,EX	PURE AUDIO	ZONE2	OFF	THX	RT/TPTV/TP	MEMORY	TUNING
A6	PURE AUDIO	RI HD	MUSIC OPTIMIZER	THX	DIMMER	Re-EQ	LATE NIGHT
HT36 US	MUSIC OPTIMIZER	ZONE2	OFF	DIMMER	MEMORY	TUNING	DISPLAY
HT36 EX	PURE AUDIO	ZONE2	OFF	RT/TPTV/TP	MEMORY	TUNING	DISPLAY

SCHEMATIC DIAGRAM/ BLOCK DIAGRAM-9

DISPLAY SECTION PART-9

Model No. DTR-20.3/DTR-30.3 Schematic Diagram (Part-09) Display Section

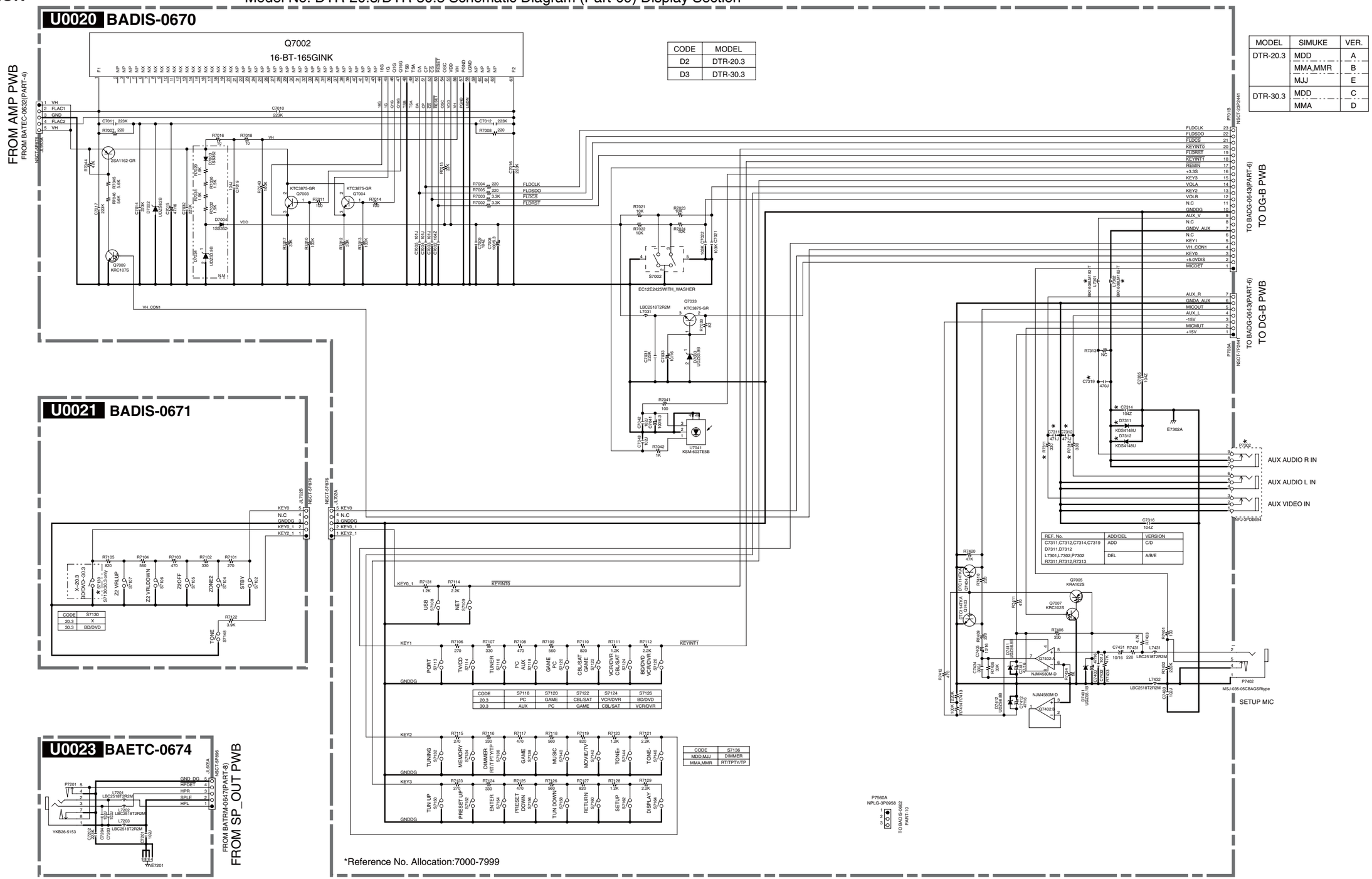

CODE	MODEL
D2	DTR-20.3
D3	DTR-30.3

MODEL	SIMUKE	VER.
DTR-20.3	MDD	A
	MMA,MMR	B
	MJJ	E
DTR-30.3	MDD	C
	MMA	D

REF. No.	ADD/DEL	VERSION
C7311,C7312,C7314,C7319	ADD	C/D
D7311,D7312		
L7301,L7302,P7302	DEL	A/B/E
R7311,R7312,R7313		

A B C D

SCHEMATIC DIAGRAM/ BLOCK DIAGRAM-9

DISPLAY SECTION PART-9

1

Model No. DTR-20.3/DTR-30.3 Schematic Diagram
(Part-09) Display Section

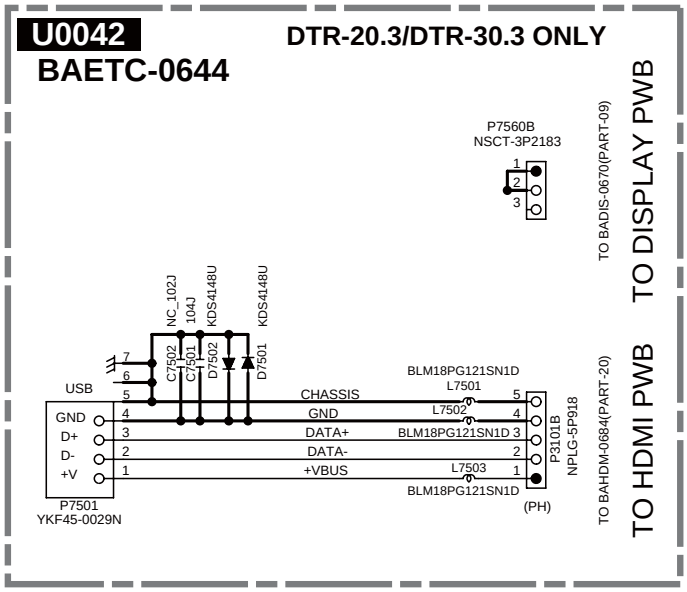

2

3

4

5

SCHEMATIC DIAGRAM/ BLOCK DIAGRAM-10

POWER SUPPLY SECTION PART-10

・印は火災、感電の危険に関与する部品の為、必ず指定部品を使用の事。
・電圧表示は無信号時に測定した直流電圧を示す。
（単位Ｖ，入力抵抗１００ＫΩ／Ｖ以上の電圧計）
・記入なき電解コンデンサの単位はμＦ／ＷＶである。
・記入なきコンデンサの単位はｐＦ／５０ＷＶである。
例　０３０→３ｐＦ　３３０→３３ｐＦ　３３１→３３０ｐＦ　３３３→０．０３３μＦ
・本配線図は基本配線図につき性能改善等により予告なく変更する事がある。

CAUTION

FOR CONTINUED PROTECTION AGAINST FIRE HAZARD, REPLACE ONLY WITH FUSE OF SAME TYPE AND RATING INDICATED.

ATTENTION

CAUTIONF AFIN D'ASSURER UNE PROTECTION PERMANENTE CONTRE LES RISQUES D'INCENDIE, REMPLACER UNIQUEMENT PAR UN FUSIBLE DE MEME TYPE ET CALIBRATION COMME INDIQUE.

THIS SYMBOL LOCATED NEAR THE FUSE INDICATES THAT THE FUSE USED IS SLOW OPERATING TYPE FOR CONTINUED PROTECTION AGAINST FIRE FUSE HAZARD,REPLACE WITH SAME TYPE FUSE. FOR FUSE RATING REFER TO THE MAKING ADJACENT TO THE SYMBOL.

CE SYMBOLE INDIQUE QUE LE FUSIBLE UTLISE EST A LENT, E POUR UNE PROTECTION PERMANENTE,N'UTILISER QUE DES FUSIBLES DE MEME TYPE. CE DARNIER EST INDIQUE LA QU LE PRESENT SYMBOL EST APPOSE.

CODE	MODEL
D2	DTR-20.3
D3	DTR-30.3

TYPE	AC
D,F	120V / 60Hz
P,M	230-240V / 50Hz
J	100V / 50/60Hz

Model No. DTR-20.3/DTR-30.3
Schematic Diagram (Part-10) PS Section

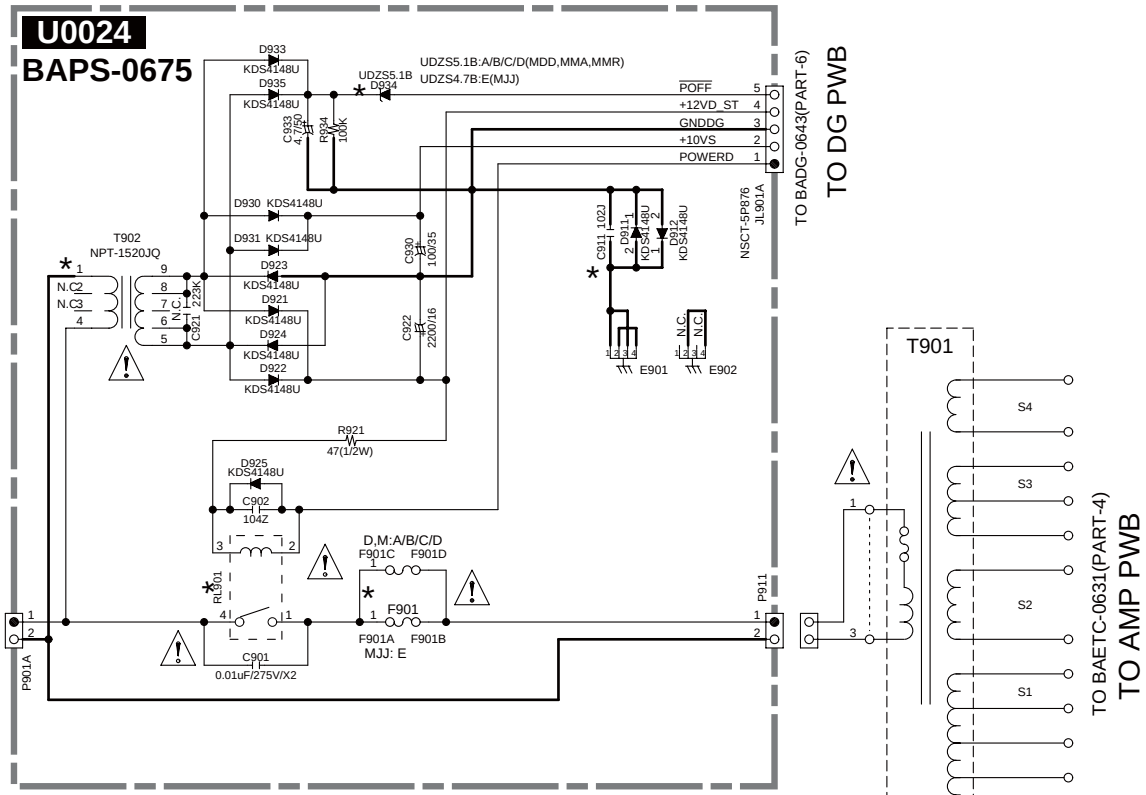

T902

TYPE	D2	D3
D,F	NPT-1520JQ	NPT-1520JQ
P,M	NPT-1520GQ	NPT-1520GQ
J	NPT-1520JQ	---

RL901

TYPE	D2	D3
D,F	NRL-1P10A	NRL-1P10A
P,M	NRL-1P5A	NRL-1P5A
J	NRL-1P10A	---

F901

TYPE	D2	D3
D,F	10A 125V	10A 125V
P,M	T5AL250V	T5AL250V
J	12A 125V	---

T901

TYPE	D2/D3
D	NPT-1605D
P	---
M	NPT-1605M
J	NPT-1605J

DTR-20.3/DTR-30.3

SCHEMATIC DIAGRAM/ BLOCK DIAGRAM-10

PS SECTION PART-10

Model No. TX-NR309/HT-R290/390/548/590/HT-RC330
Schematic Diagram (Part-10) PS Section

NOTE

- THE COMPONENTS IDENTIFIED BY MARK ⚠ ARE CRITICAL FOR SAFETY. REPLACE ONLY WITH PART NUMBER SPECIFIED.
- VOLTAGE (MEASURED WITH VOLTMETER) IS DC VOLTAGE. (NO INPUT SIGNAL)
- ELECTROLYTIC CAPACITORS ( )ARE IN uF/WV.
- ALL CAPACITORS ARE IN pF/50WV UNLESS OTHERWISE NOTED. EX) 030 → 3pF 330 → 33pF 331 → 330pF 333 → 0.033uF
- ALL RESISTORS ARE IN OHMS 1/4WATTS UNLESS OTHERWISE NOTED. THE THICK LINES ON PC BOARD ARE THE PRINTING SIDE OF THE PARTS. EX) PRINTING SIDE
- CIRCUIT IS SUBJECT TO CHANGE FOR IMPROVEMENT.

CAUTION

FOR CONTINUED PROTECTION AGAINST FIRE HAZARD, REPLACE ONLY WITH FUSE OF SAME TYPE AND RATING INDICATED.

ATTENTION

CAUTIONF AFIN D'ASSURER UNE PROTECTION PERMANENTE CONTRE LES RISQUES D'INCENDIE, REMPLACER UNIQUEMENT PAR UN FUSIBLE DE MEME TYPE ET CALIBRATION COMME INDIQUE.

THIS SYMBOL LOCATED NEAR THE FUSE INDICATES THAT THE FUSE USED IS SLOW OPERATING TYPE FOR CONTINUED PROTECTION AGAINST FIRE FUSE HAZARD,REPLACE WITH SAME TYPE FUSE. FOR FUSE RATING REFER TO THE MAKING ADJACENT TO THE SYMBOL.

CE SYMBOLE INDIQUE QUE LE FUSIBLE UTLISE EST A LENT, E POUR UNE PROTECTION PERMANENTE,N'UTILISER QUE DES FUSIBLES DE MEME TYPE. CE DARNIER EST INDIQUE LA QU LE PRESENT SYMBOL EST APPOSE.

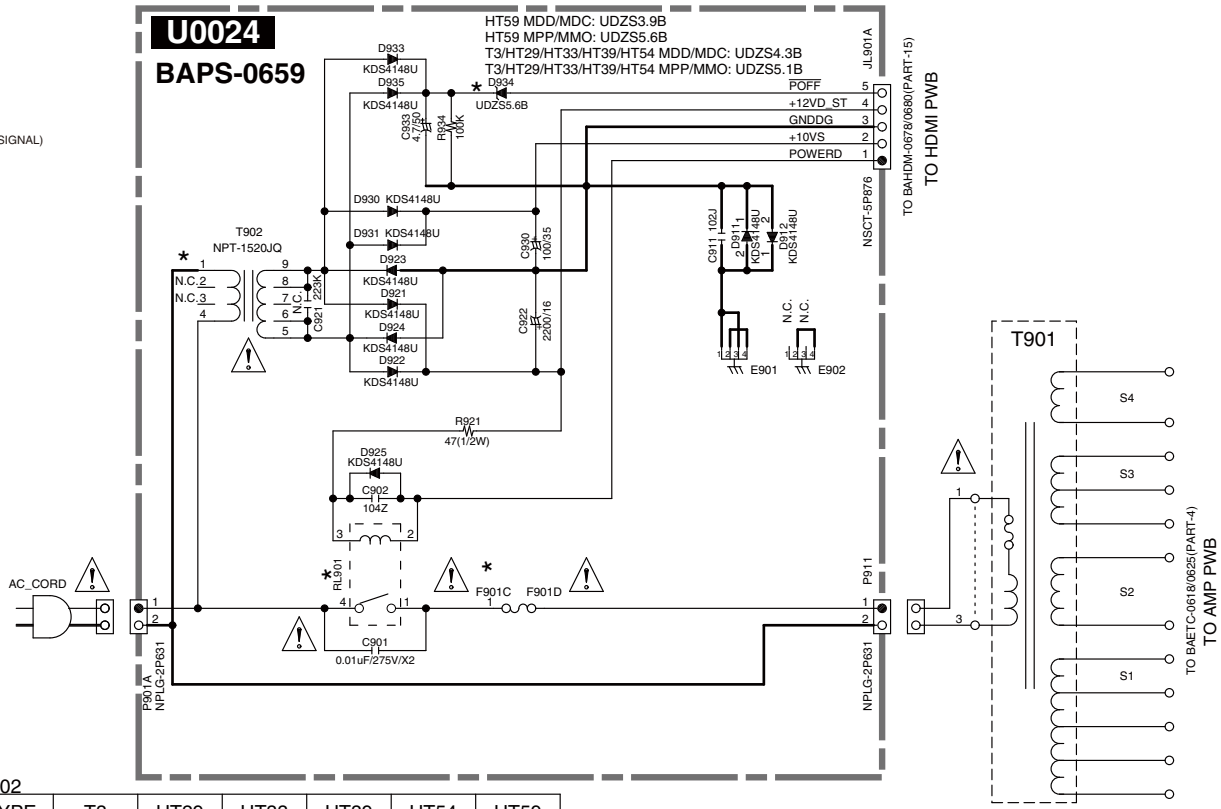

CODE	MODEL
T3	TX-SR309
HT29	HT-R290
HT33	HT-RC330
HT39	HT-R390
HT54	HT-R548
HT59	HT-R590

TYPE	AC
D,F	120V / 60HZ
P,M	230-240V / 50HZ

T902

TYPE	T3	HT29	HT33	HT39	HT54	HT59
D,F	1520JQ	1520JQ	1520JQ	1520JQ	---	1520JQ
P,M	1520GQ	---	1520GQ	1520GQ	1520GQ	1520GQ

F901

TYPE	T3	HT29	HT33	HT39	HT54	HT59
D,F	8A 125V	8A 125V	8A 125V	8A 125V	---	8A 125V
P,M	T4AL250V	---	T4AL250V	T4AL250V	T4AL250V	T4AL250V

RL901

TYPE	T3	HT29	HT33	HT39	HT54	HT59
D,F	NRL-1P5A	NRL-1P5A	NRL-1P5A	NRL-1P5A	---	NRL-1P5A
P,M	NRL-1P5A	---	NRL-1P5A	NRL-1P5A	NRL-1P5A	NRL-1P5A

TX-NR309/HT-R290/HT-R390/HT-R548/HT-R590/HT-RC330

SCHEMATIC DIAGRAM/ BLOCK DIAGRAM-10

POWER SUPPLY SECTION PART-10

Model No. TX-NR509/609/HT-R690/990/HT-RC360
Schematic Diagram (Part-10) PS Section

・印は火災、感電の危険に関与する部品の為、必ず指定部品を使用の事。
・電圧表示は無信号時に測定した直流電圧を示す。
（単位Ｖ，入力抵抗１００ＫΩ／Ｖ以上の電圧計）
・記入なき電解コンデンサの単位はμＦ／ＷＶである。
・記入なきコンデンサの単位はｐＦ／５０ＷＶである。
例　０３０→３ｐＦ　３３０→３３ｐＦ　３３１→３３０ｐＦ　３３３→０．０３３μＦ
・本配線図は基本配線図につき性能改善等により予告なく変更する事がある。

* THE COMPONENTS IDENTIFIED BY MARK ⚠ ARE CRITICAL FOR SAFETY. REPLACE ONLY WITH PART NUMBER SPECIFIED.
* VOLTAGE (MEASUREDWITHVOLTMETER) ISDCVOLTAGE. (NO INPUT SIGNAL)
* ELECTROLYTIC CAPACITORS (⚠) ARE IN uF/WV.
* ALL CAPACITORS ARE IN pF/50WV UNLESS OTHERWISE NOTED.
ＥＸ）　０３０→３ｐＦ　３３０→３３ｐＦ　３３１→３３０ｐＦ　３３３→０．０３３ｕＦ
* CIRCUIT IS SUBJECT TO CHANGE FOR IMPROVEMENT.

CAUTION

FOR CONTINUED PROTECTION AGAINST FIRE HAZARD, REPLACE ONLY WITH FUSE OF SAME TYPE AND RATING INDICATED.

ATTENTION

CAUTIONF AFIN D'ASSURER UNE PROTECTION PERMANENTE CONTRE LES RISQUES D'INCENDIE, REMPLACER UNIQUEMENT PAR UN FUSIBLE DE MEME TYPE ET CALIBRATION COMME INDIQUE.

THIS SYMBOL LOCATED NEAR THE FUSE INDICATES THAT THE FUSE USED IS SLOW OPERATING TYPE FOR CONTINUED PROTECTION AGAINST FIRE FUSE HAZARD,REPLACE WITH SAME TYPE FUSE. FOR FUSE RATING REFER TO THE MAKING ADJACENT TO THE SYMBOL.

CE SYMBOLE INDIQUE QUE LE FUSIBLE UTLISE EST A LENT, E POUR UNE PROTECTION PERMANENTE,N'UTILISER QUE DES FUSIBLES DE MEME TYPE. CE DARNIER EST INDIQUE LA QU LE PRESENT SYMBOL EST APPOSE.

T902

TYPE	T5	A5	HT69	HT99
D,F	NPT-1520JQ	---	NPT-1520JQ	NPT-1520JQ
P,M	NPT-1520GQ	---	---	NPT-1520GQ
J	---	NPT-1520JQ	---	---

TYPE	T6	A6	HT36
D,F	NPT-1520JQ	---	NPT-1520JQ
P,M	NPT-1520GQ	---	NPT-1520GQ
J	---	NPT-1520JQ	---

CODE	MODEL
T5	TX-NR509
	TX-NR579
A5	TX-NA579
HT69	HT-R690
HT99	HT-R990
T6	TX-NR609
A6	TX-NA609
HT36	HT-RC360

TYPE	AC
D,F	120V / 60HZ
P,M	230-240V / 50HZ
J	100V / 50/60HZ

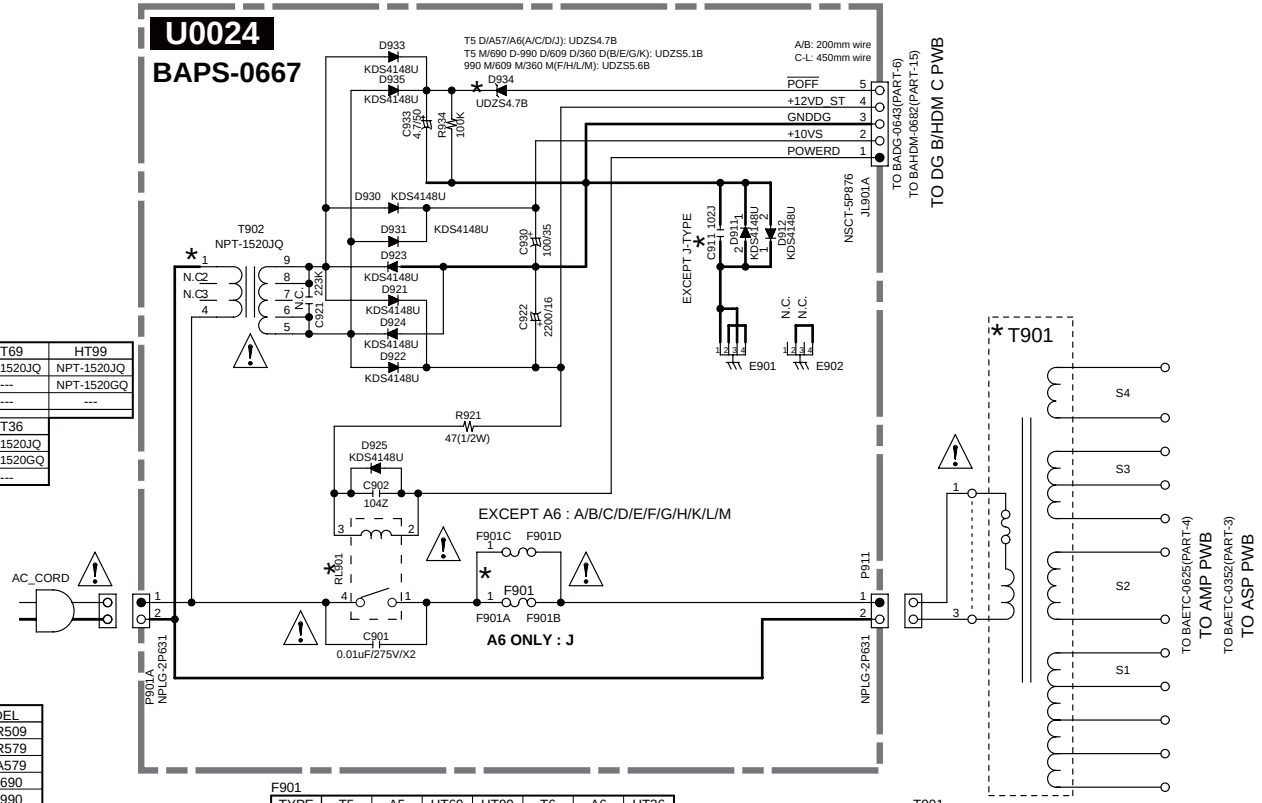

F901

TYPE	T5	A5	HT69	HT99	T6	A6	HT36
D,F	8A 125V	---	8A 125V	8A 125V	10A 125V	---	10A 125V
P,M	T4AL250V	---	---	T4AL250V	T5AL250V	---	T5AL250V
J	---	10A 125V	---	---	---	12A 125V	---

RL901

TYPE	T5	A5	HT69	HT99	T6	A6	HT36
D,F	NRL-1P5A	---	NRL-1P5A	NRL-1P5A	NRL-1P10A	---	NRL-1P10A
P,M	NRL-1P5A	---	---	NRL-1P5A	NRL-1P5A	---	NRL-1P5A
J	---	NRL-1P10A	---	---	---	NRL-1P10A	---

T901

TYPE	T5	A5	HT69	HT99	T6	A6	HT36
D,F	NPT-1604D	---	NPT-1604D	NPT-1604D	NPT-1605D	---	NPT-1605D
P	NPT-1604P	---	---	NPT-1604P	NPT-1605M	---	---
M	NPT-1604M	---	---	---	NPT-1605M	---	NPT-1605M
J	---	NPT-1604J	---	---	---	NPT-1605J	---

TX-NR509/TX-NR609/HT-R690/HT-R990/HT-RC360

SCHEMATIC DIAGRAM/ BLOCK DIAGRAM-11

D4 TERMINAL SECTION PART-11

MODEL NO. TX-NA579/NA609/DTR-20.3(JJ)

SCHEMATIC DIAGRAM (PART-11) D4 SECTION

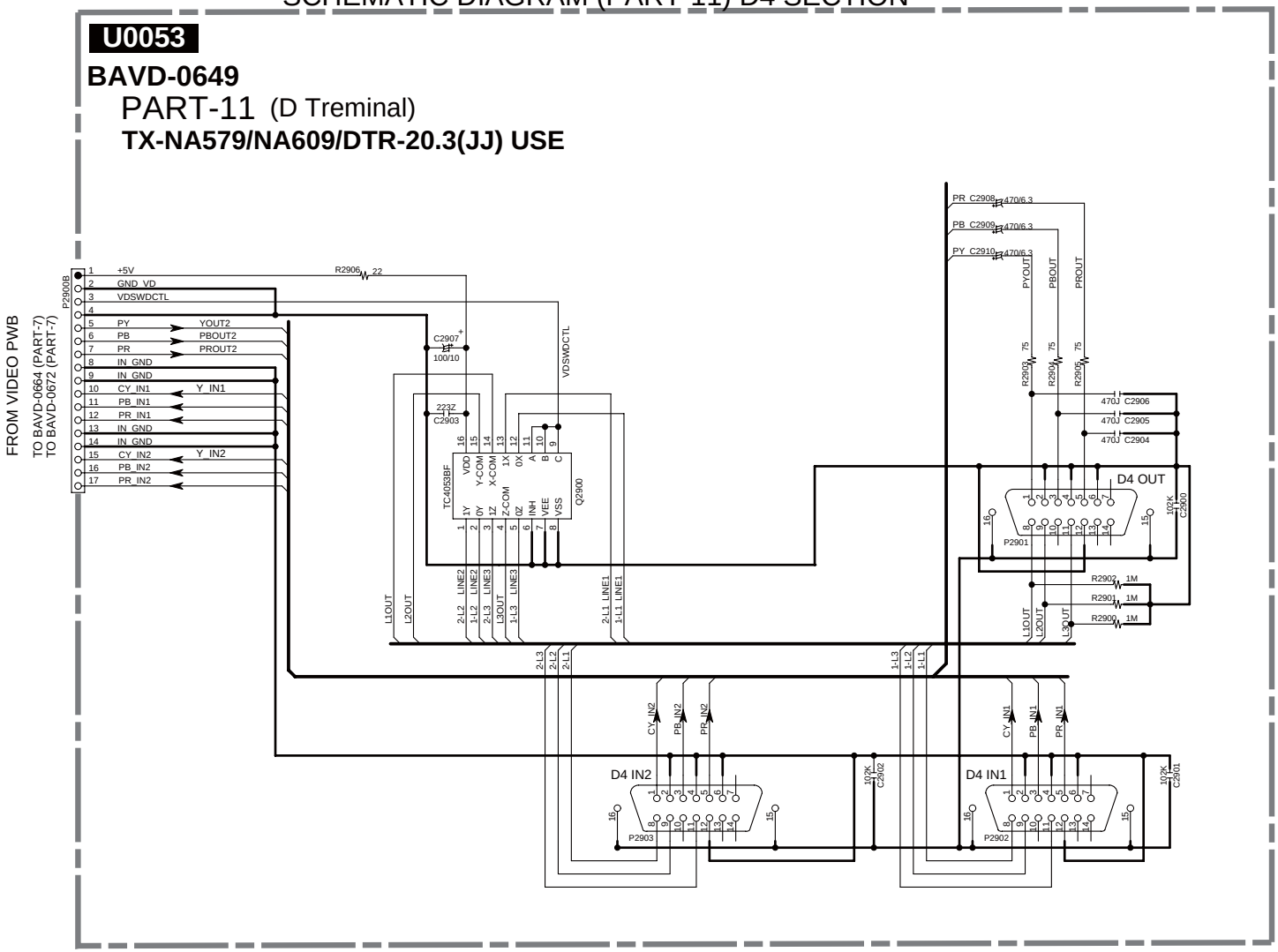

CODE	MODEL	CODE	MODEL
T6	TX-NR609	RC36	HT-RC360
A6	TX-NA609	D2	DTR-20.3
A57	TX-NA579	D3	DTR-30.3

SCHEMATIC DIAGRAM/ BLOCK DIAGRAM-12

RS-232/ 12V TRIG./ IR SECTION PART-12

DTR-20.3/30.3 Schematic Diagram RS-232/12VTrig/IR Section (PART-12)

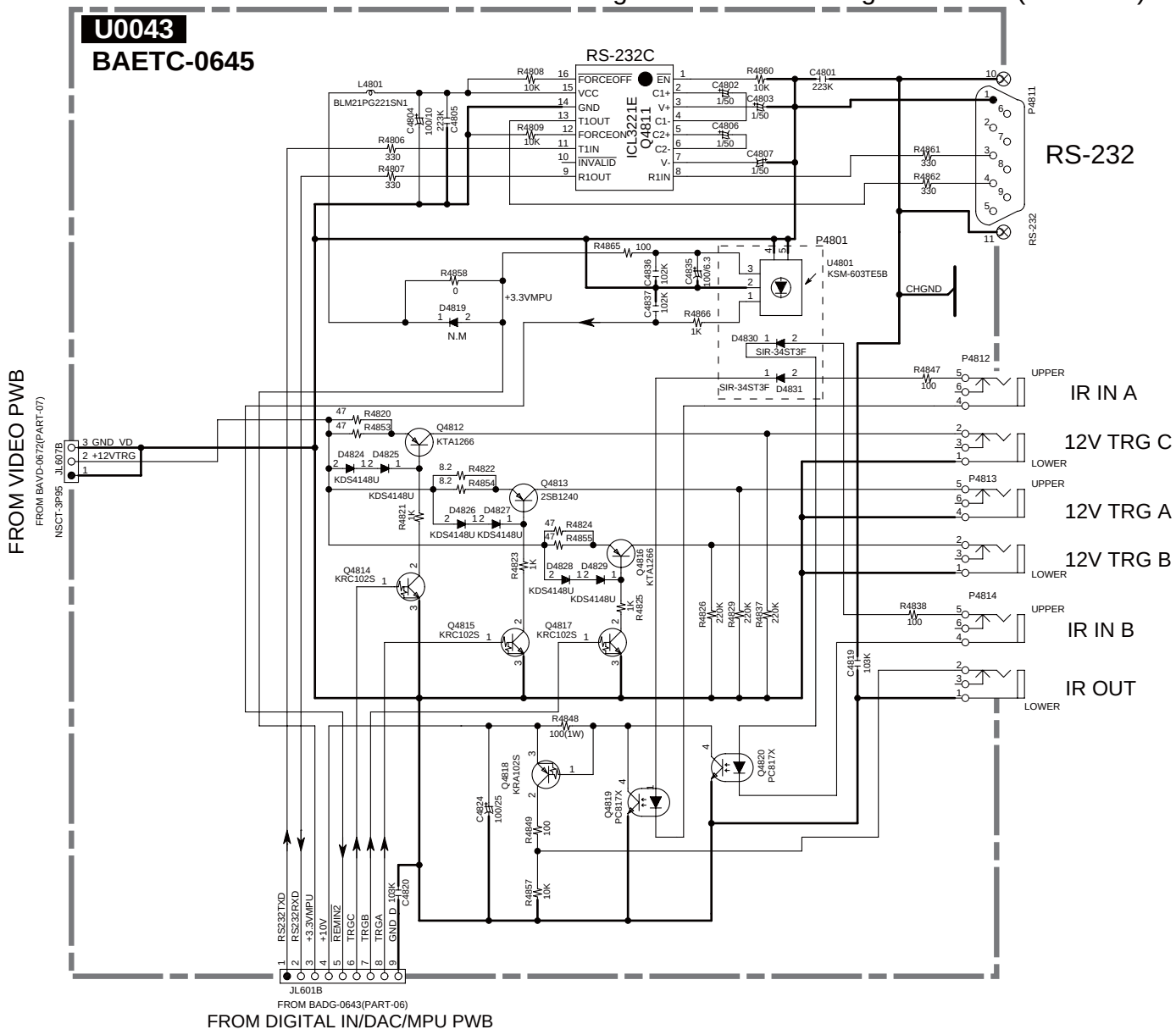

SCHEMATIC DIAGRAM/ BLOCK DIAGRAM-13

FRONT HDMI SECTION
PART-13

Model No. TX-NR(A)609,DTR-30.3,HT-RC360 SCHEMATIC DIAGRAM (PART-13) FRONT HDMI SECTION

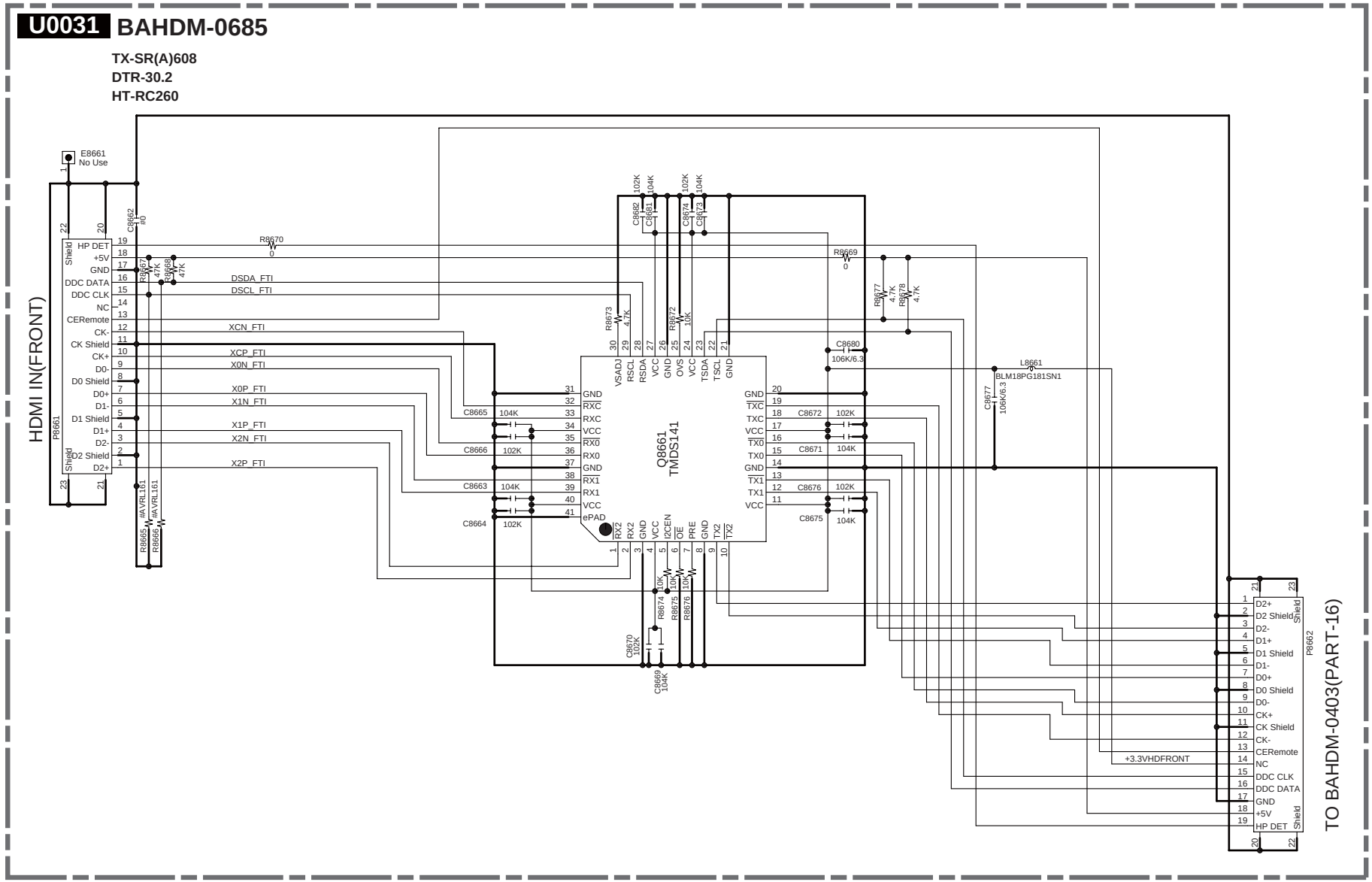

SCHEMATIC DIAGRAM/ BLOCK DIAGRAM-14

MPU SECTION PART-14

Model No. TX-NR509/TX-NA509/TX-NA509V SCHEMATIC DIAGRAM (PART-14) MPU Section

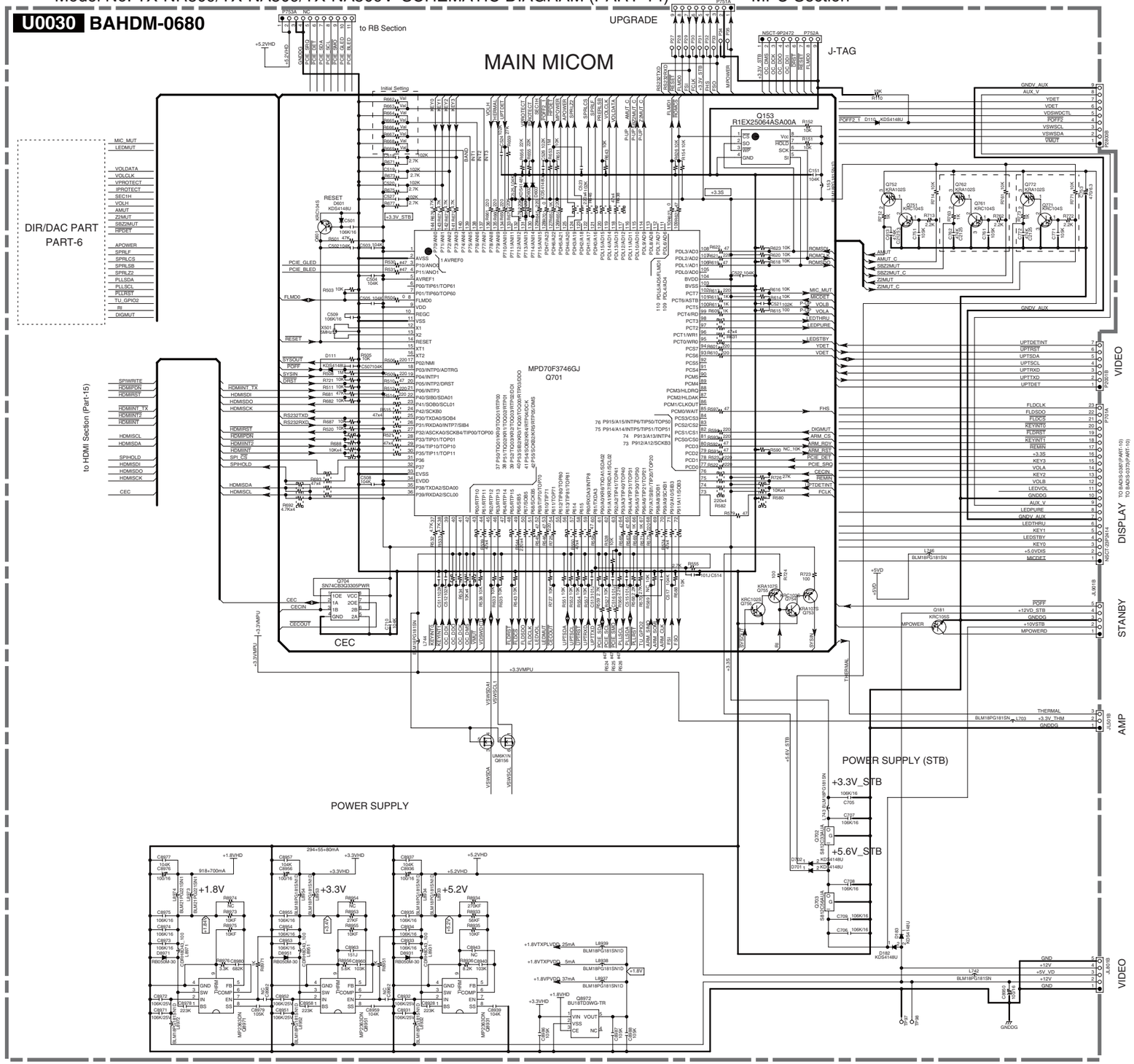

SCHEMATIC DIAGRAM/ BLOCK DIAGRAM-14

MPU SECTION PART-14

Model No. HT-R590 Schematic Diagram (Part-14) MPU Section

U0030 BAHDM-0680

MPU INITIAL SETTING VALUE

MODEL			HT-R590	
VERSION			DC DD	MQ MK
			K	L
BAND	UP	R669	33K	10K
	DOWN	R668	10K	NC
INIT1	UP	R667	NC	NC
	DOWN	R666	0	0
INIT2	UP	R665	33K	33K
	DOWN	R664	10K	10K
INIT3	UP	R663	10K	10K
	DOWN	R662	NC	NC

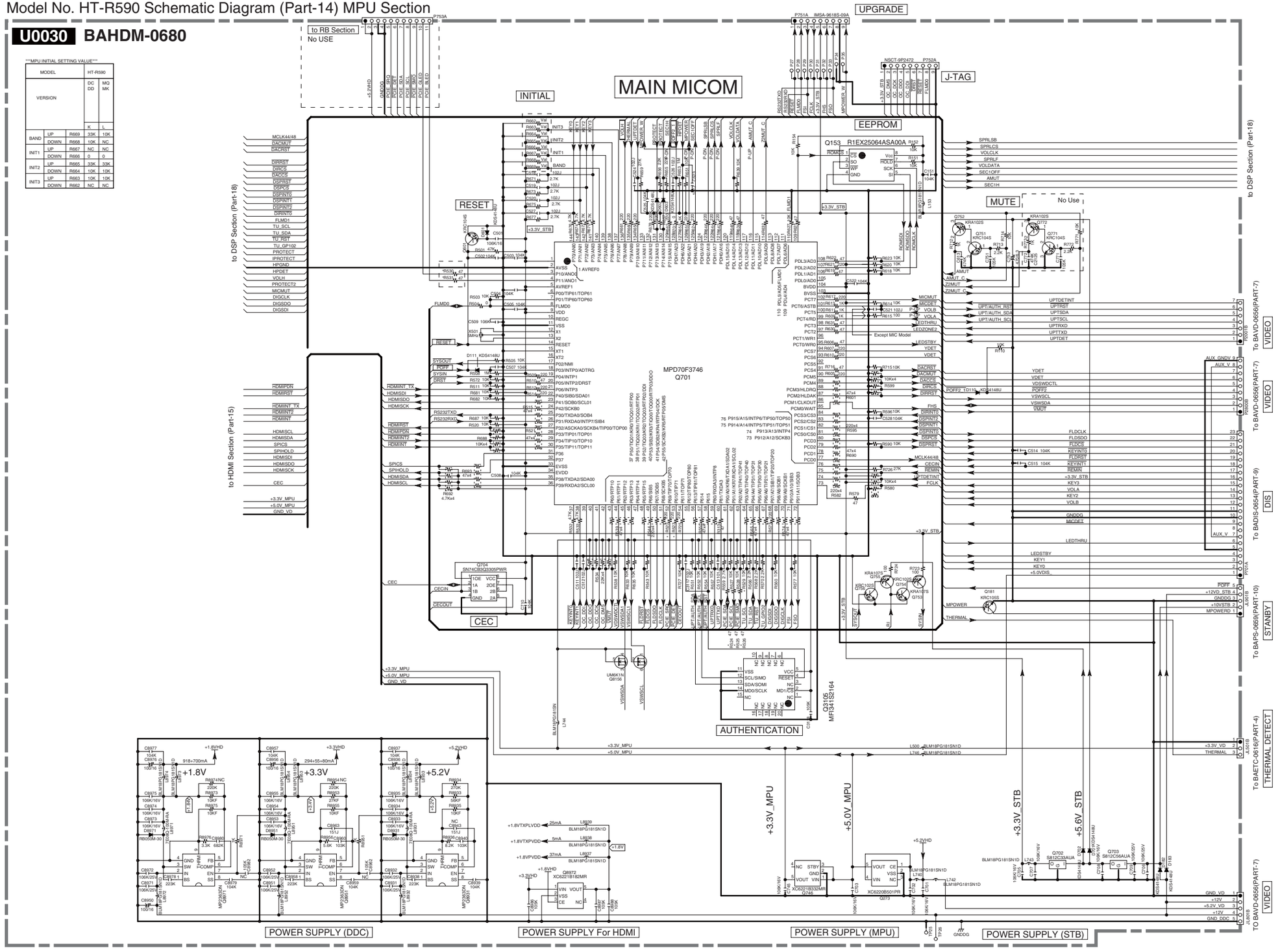

SCHEMATIC DIAGRAM/ BLOCK DIAGRAM-14

MPU SECTION PART-14

Model No. TX-SR309/ HT-R290/ HT-R390/ HT-R548/ HT-RC330 Schematic Diagram (Part-14) MPU Section

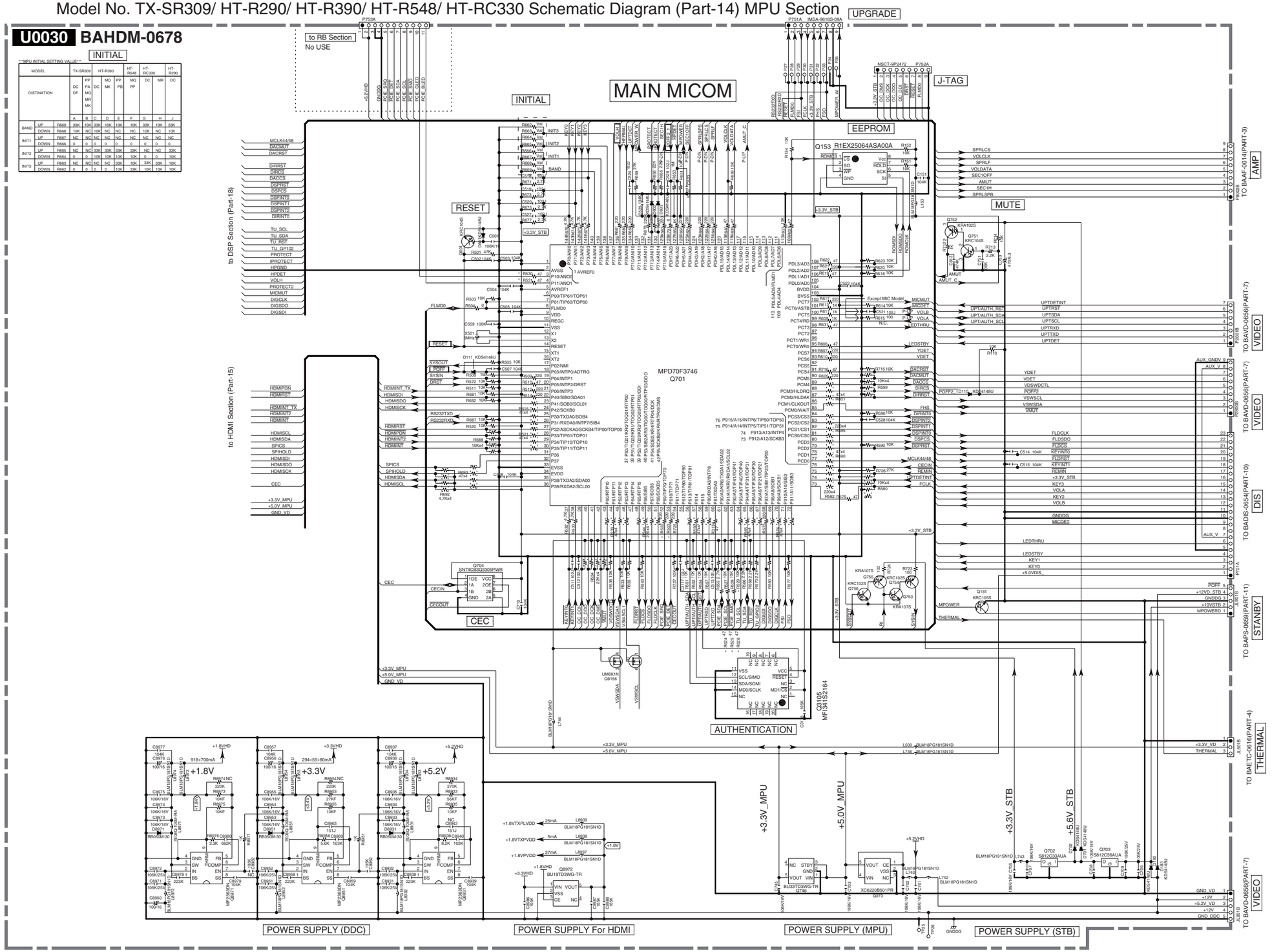

SCHEMATIC DIAGRAM-14

VMPU/ POWER SECTION PART-14

Model No. TX-NR(A)579,TX-NR(A)609,HT-RC360,DTR-20.3,DTR-30.3
Schematic Diagram (Part-14) VMPU/POWER SUPPLY Section

U0030 BAHDM-0684

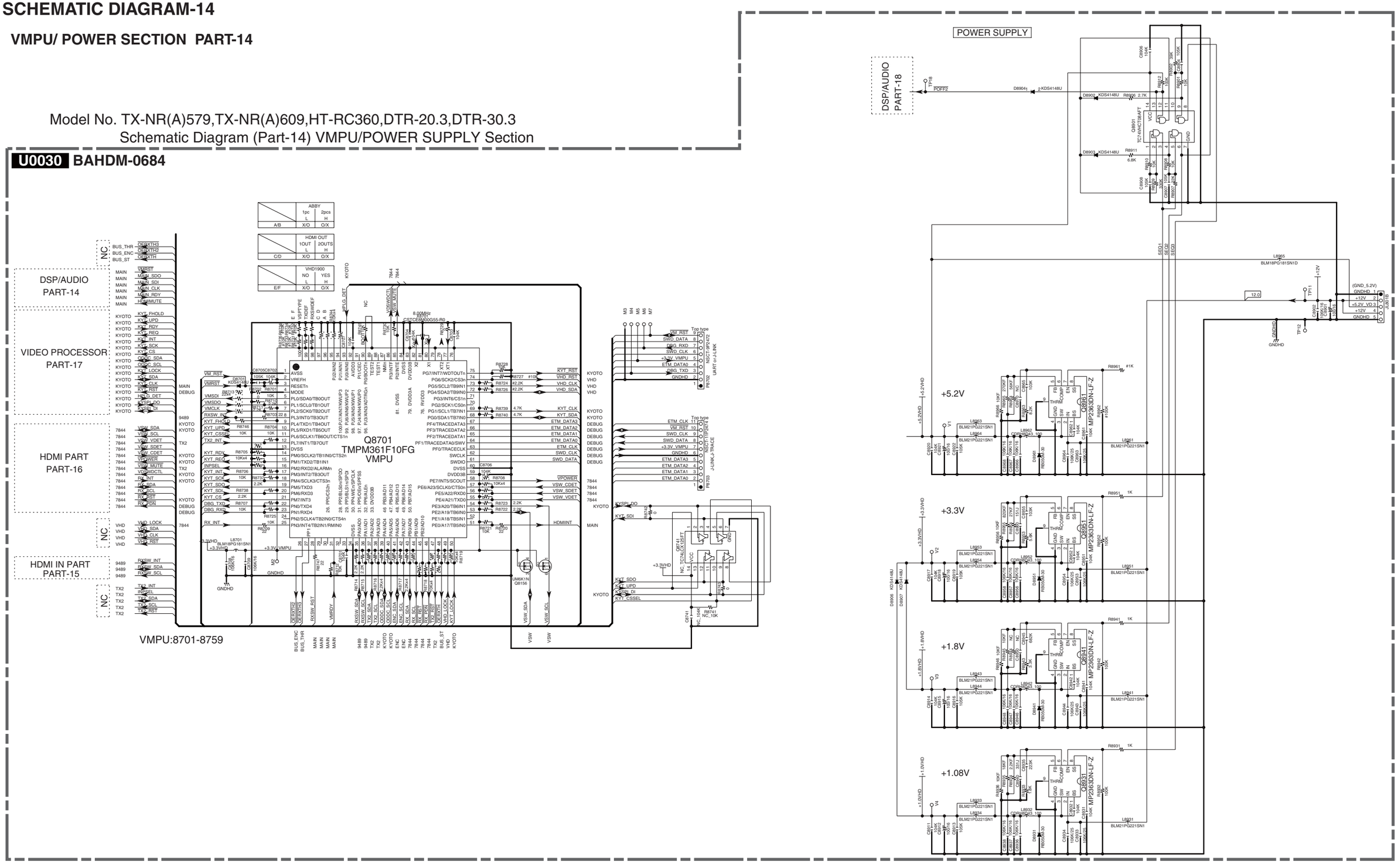

TX-NR579/TX-NA579/TX-NR609/TX-NA609/HT-RC360/DTR-20.3/DTR-30.3

SCHEMATIC DIAGRAM/ BLOCK DIAGRAM-15

HDMI INPUT SWITCH SECTION
PART-15

Model No. TX-NR(A)579,TX-NR(A)609,HT-RC360,DTR-20.3,DTR-30.3
SCHEMATIC DIAGRAM (PART-15)
HDMI INPUT SWITCH SECTION

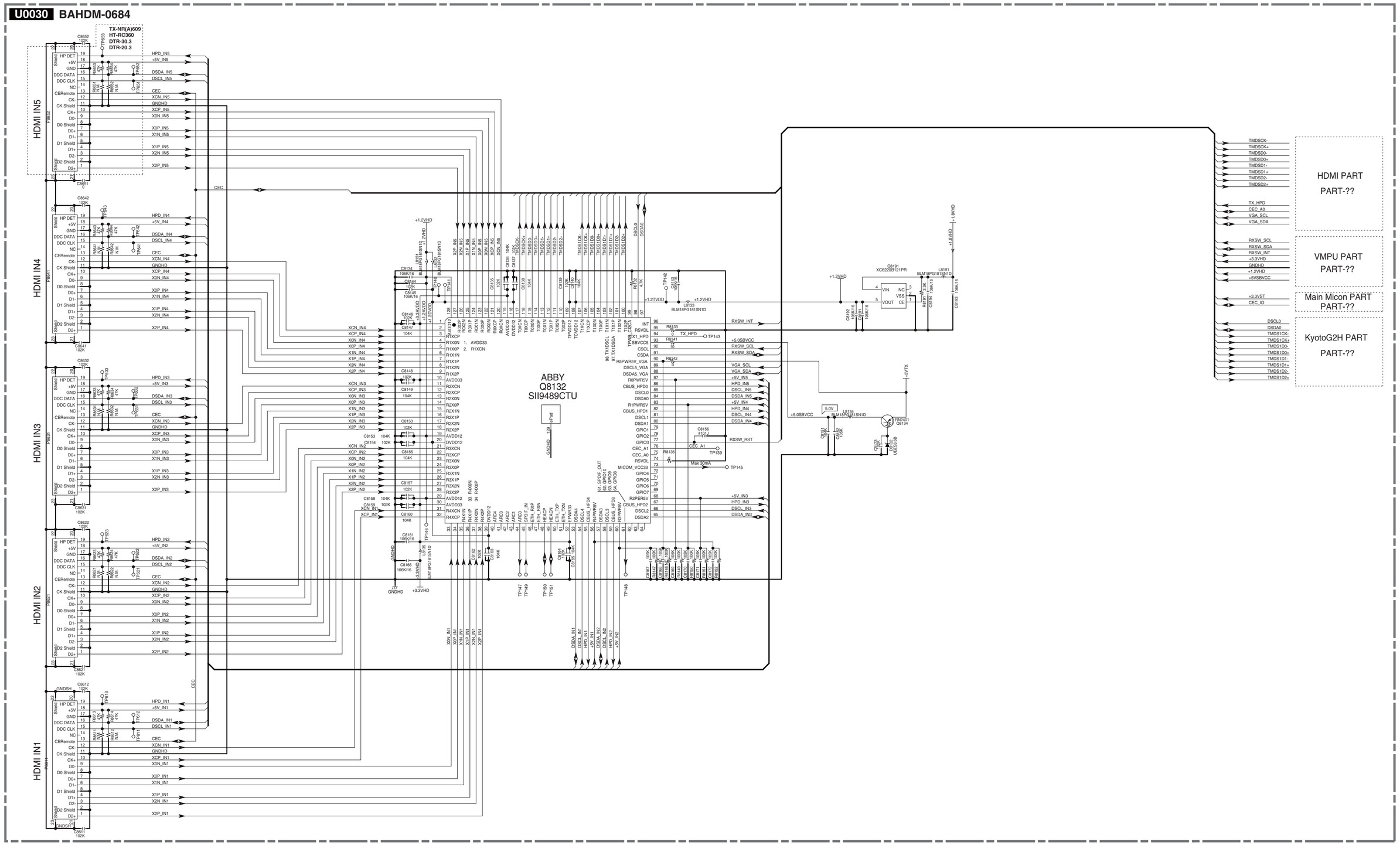

TX-NR509/TX-NA509/TX-NA509V

SCHEMATIC DIAGRAM/ BLOCK DIAGRAM-15

HDMI RX_TX SECTION PART-15

Model No. TX-NR509/TX-NA509/TX-NA509V
SCHEMATIC DIAGRAM (PART-15)
HDMI RX_TX Section

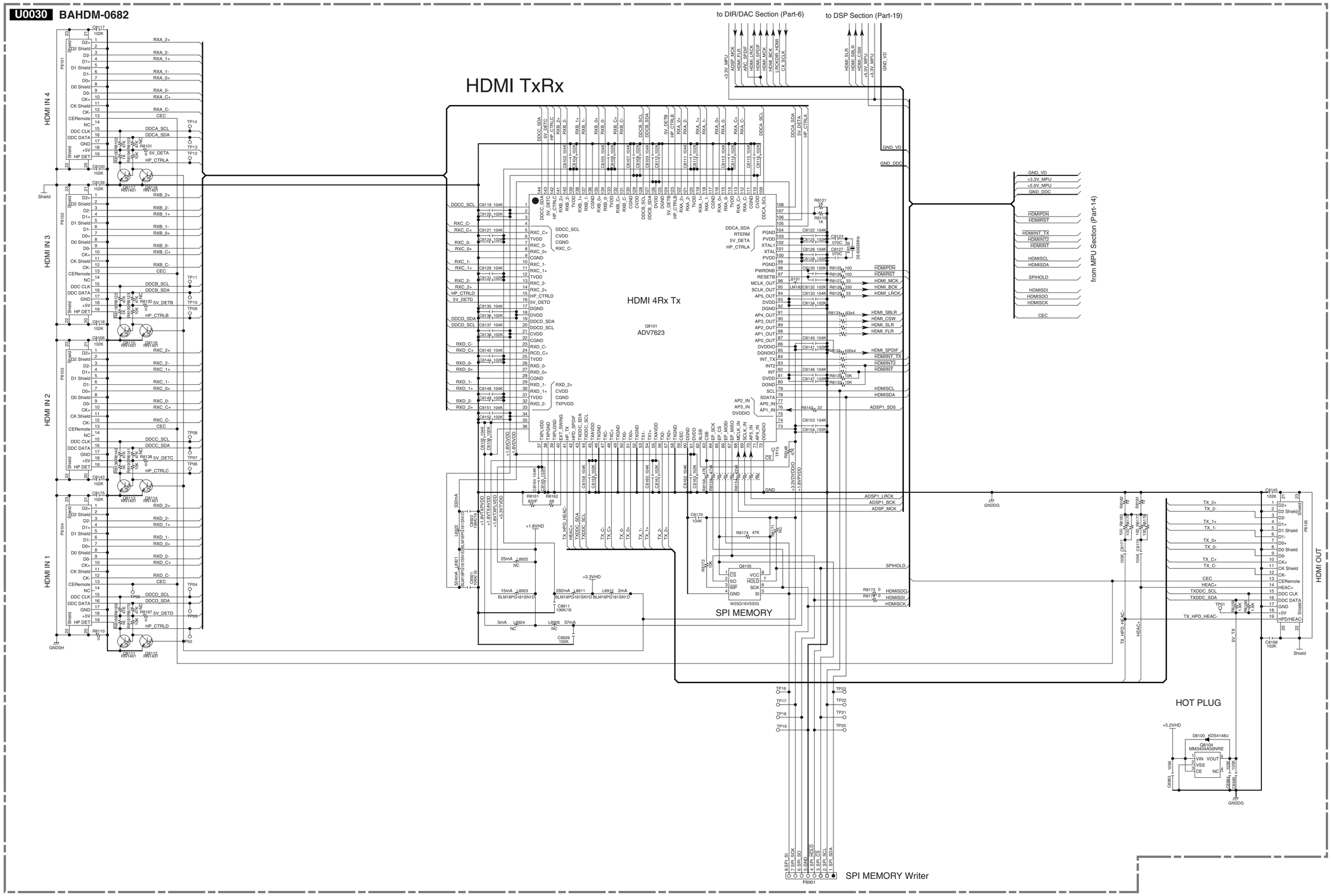

TX-SR309/HT-R290/HT-R390/HT-R548/HT-RC330/HT-R590

SCHEMATIC DIAGRAM/ BLOCK DIAGRAM-15

HDMI SECTION PART-15

Nodel No. TX-SR309/ HT-R290/ HT-R390/ HT-R548/ HT-RC330/ HT-R590 Schematic Diagram (Part-15) HDMI Section

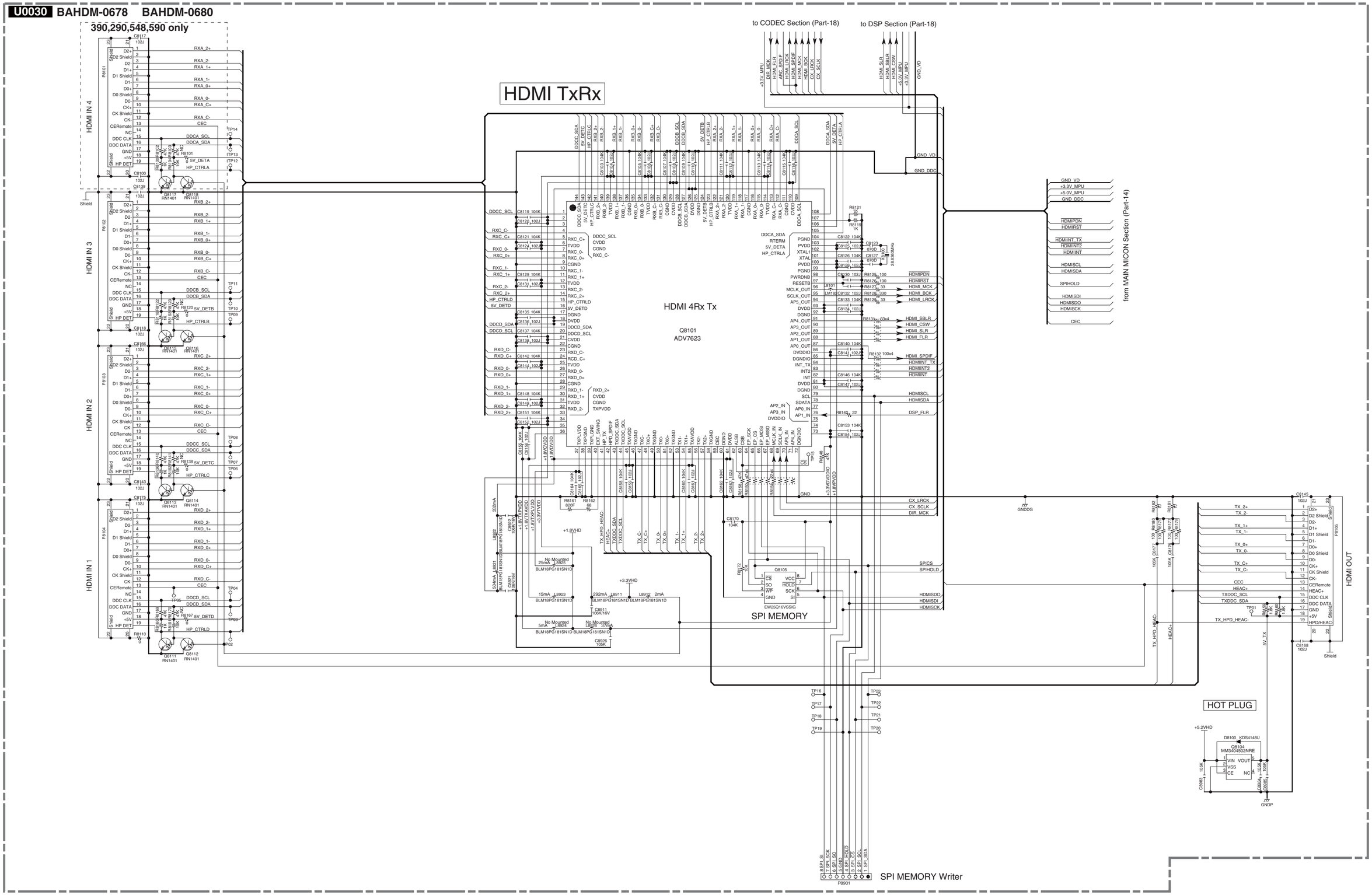

TX-NR579/TX-NA579/TX-NR609/TX-NA609/HT-RC360/DTR-20.3/DTR-30.3

SCHEMATIC DIAGRAM/ BLOCK DIAGRAM-16

HDMI SECTION PART-16

Model No. TX-NR(A)579,TX-NR(A)609,HT-RC360,DTR-20.3,DTR-30.3
Schematic Diagram (Part-16) HDMI Section

U0030
BAHDM-0684

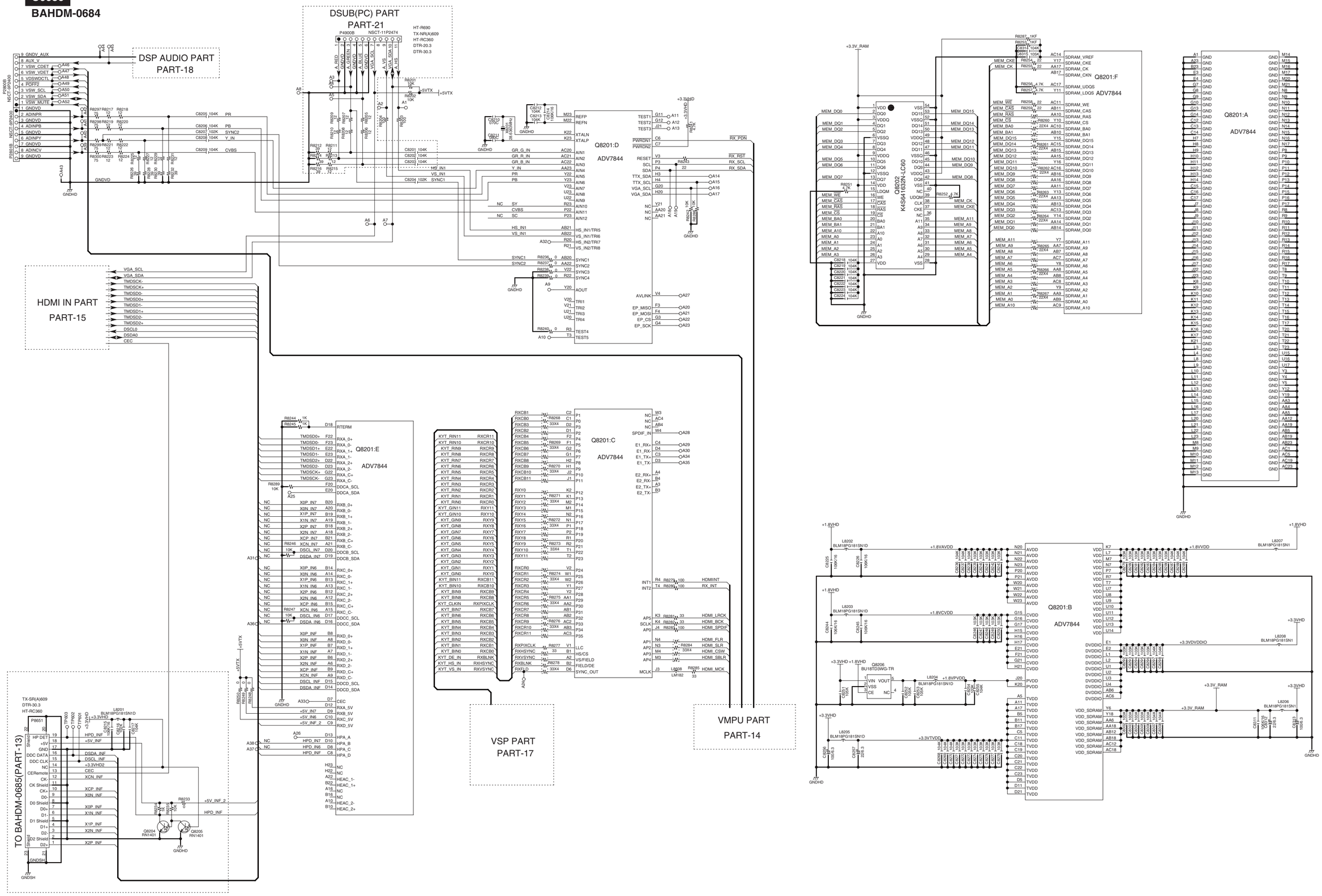

TX-NR579/TX-NA579/TX-NR609/TX-NA609/HT-RC360/DTR-20.3/DTR-30.3

SCHEMATIC DIAGRAM/ BLOCK DIAGRAM-17

VIDEO PROCESSOR SECTION

PART-17

U0030 BAHDM-0684

Model No. TX-NR(A)579,TX-NR(A)609,HT-RC360,DTR-20.3,DTR-30.3

SCHEMATIC DIAGRAM (PART-17) VIDEO PROCESSOR SECTION

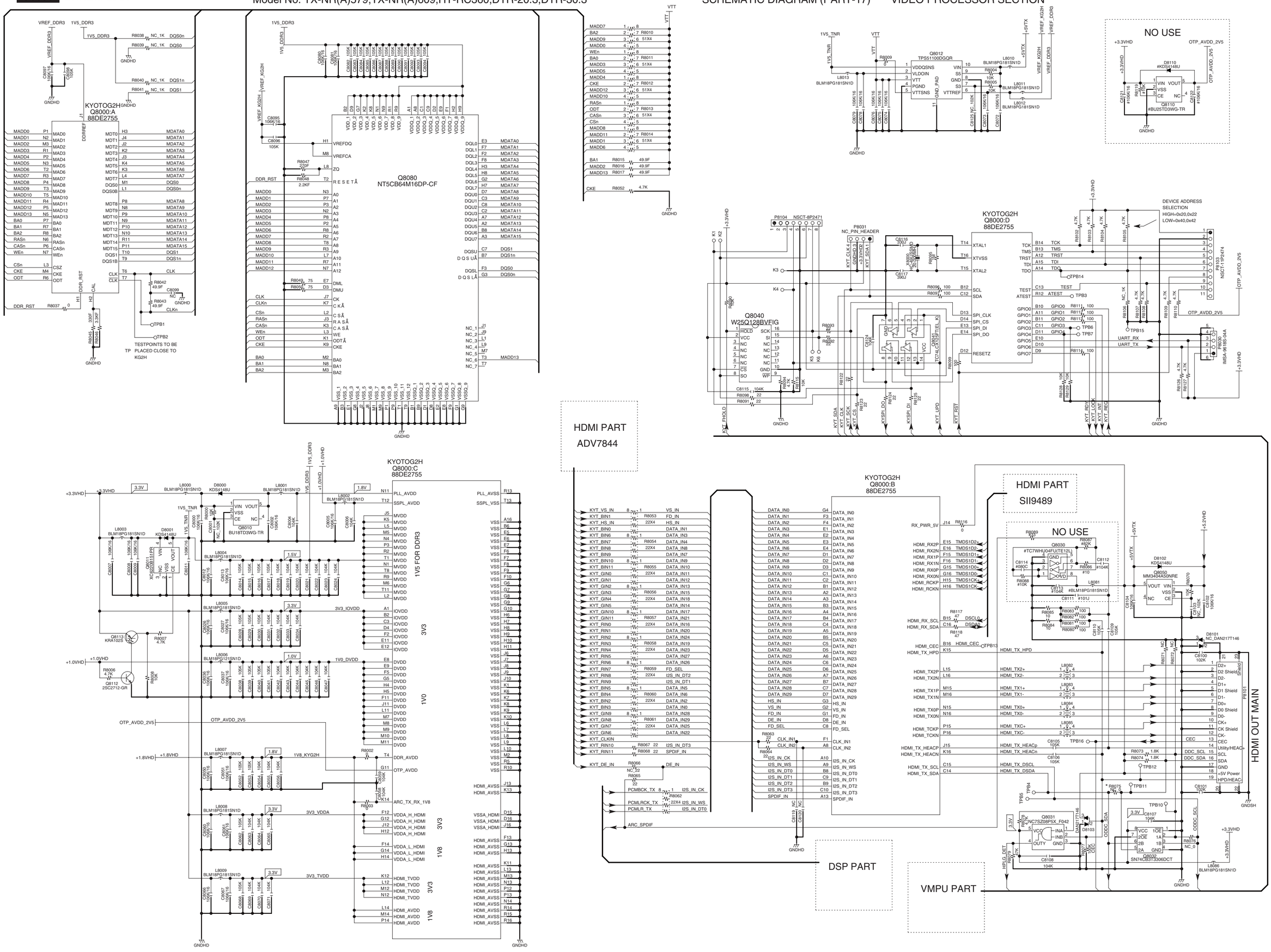

SCHEMATIC DIAGRAM/ BLOCK DIAGRAM-18

DIR/ DAC SECTION

Model No. TX-NR509/TX-NA509/TX-NA509V SCHEMATIC DIAGRAM (PART-18) DIR/DAC Section

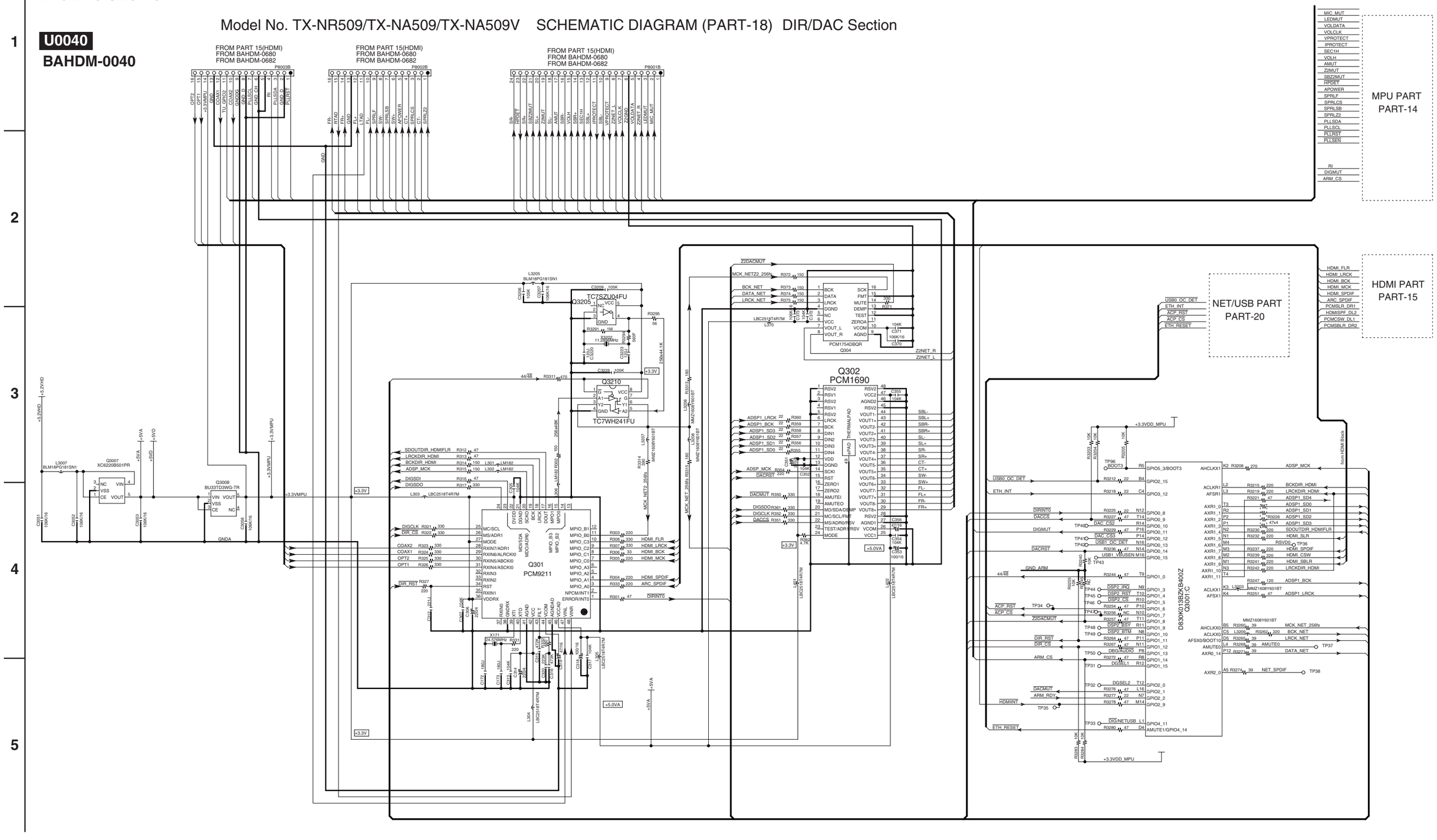

SCHEMATIC DIAGRAM/ BLOCK DIAGRAM-18

DSP AUDIO SECTION PART-18

U0040 **BAHDM-0684**

Model No.
TX-NR(A)579,TX-NR(A)609,HT-RC360,DTR-20.3,DTR-30.3,HT-R690,HT-R990
SCHEMATIC DIAGRAM (Part-18) DSP AUDIO SECTION

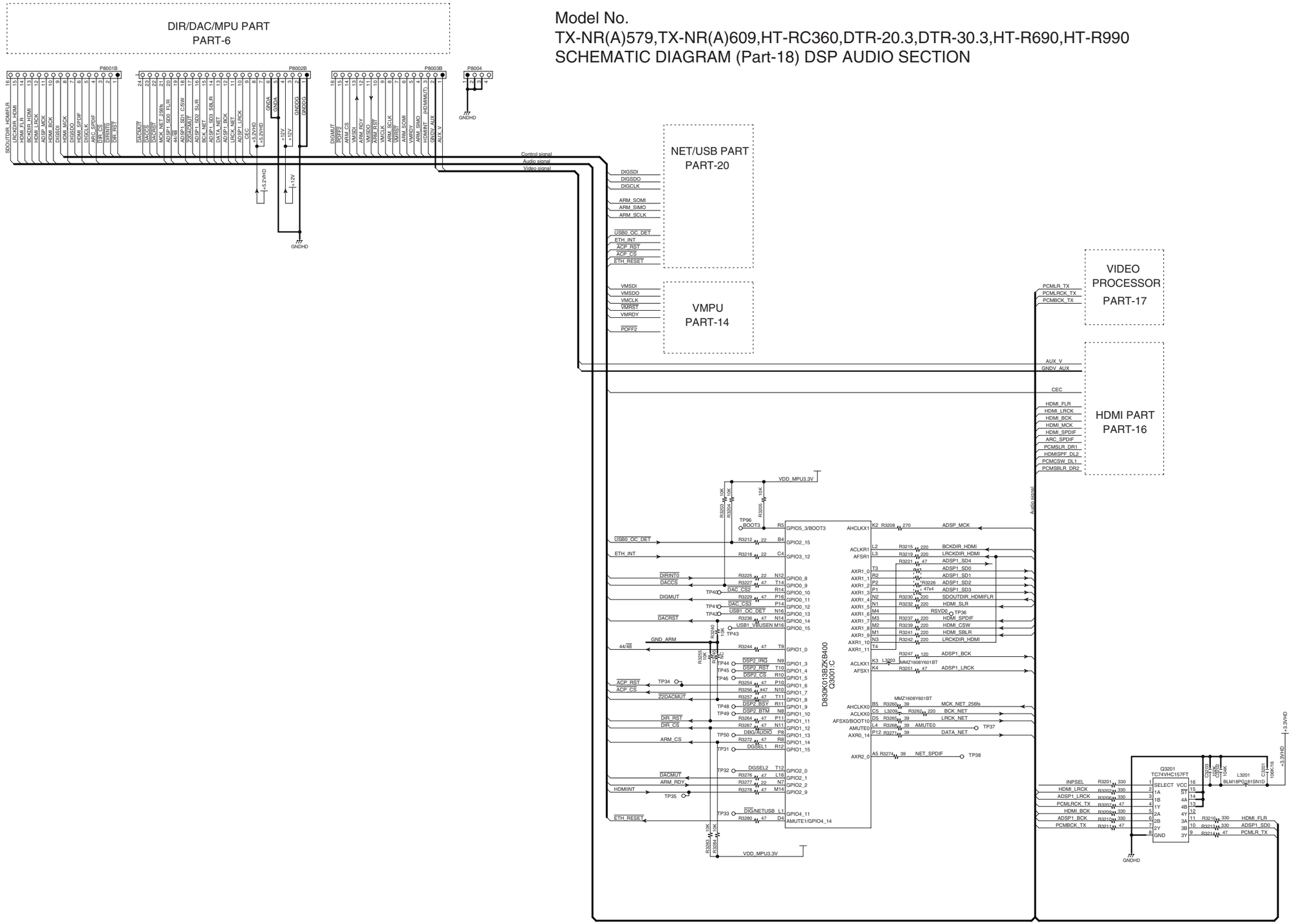

HT-R590

SCHEMATIC DIAGRAM/ BLOCK DIAGRAM-18

DSP/ CODEC/ DAC SECTION
PART-18

U0040 BAHDM-0680

Model No. HT-R590 Schematic Diagram (Part-18) DSP/CODEC/DAC Section

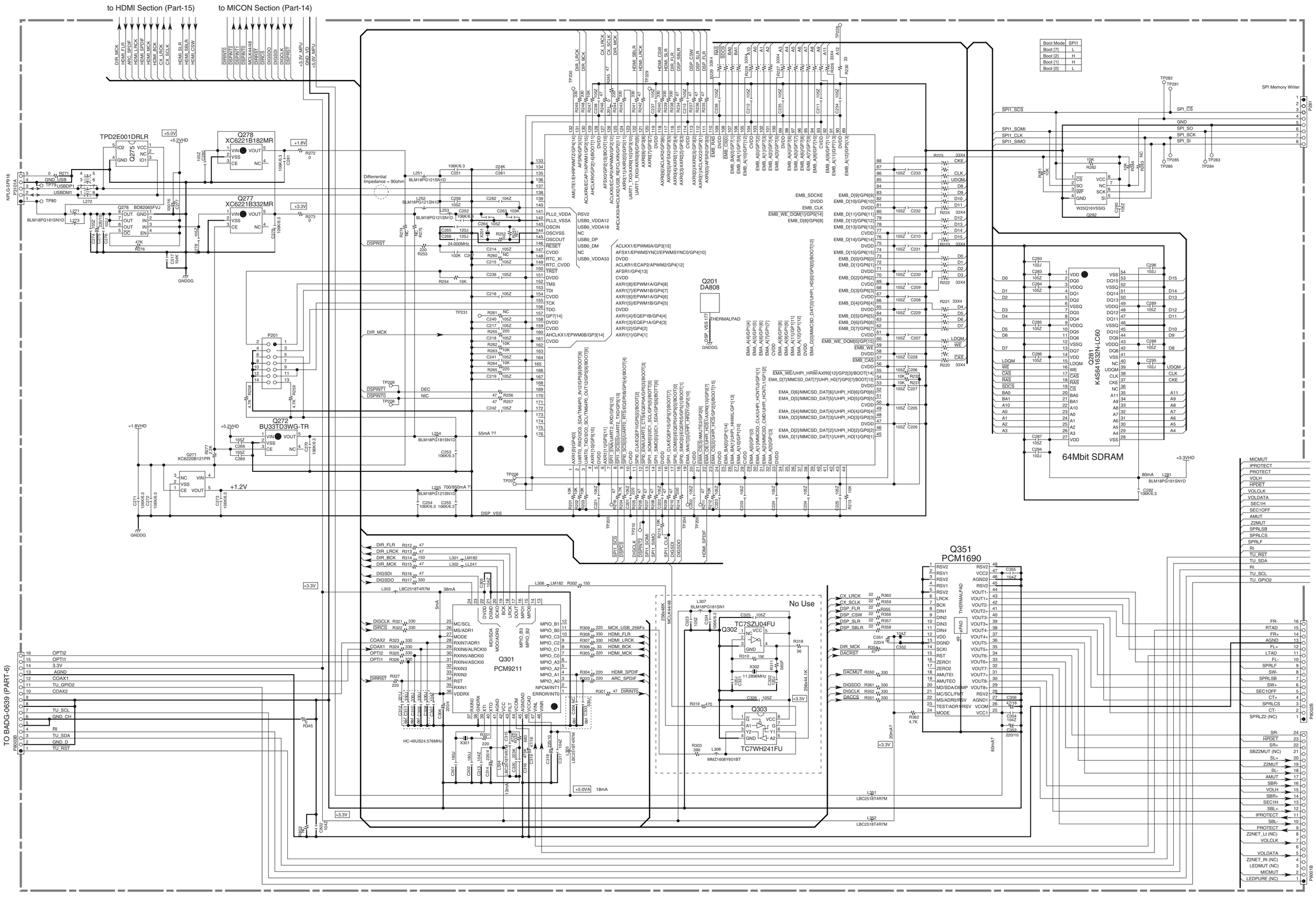

TX-SR309/HT-R290/HT-R390/HT-R548/HT-RC330

SCHEMATIC DIAGRAM/ BLOCK DIAGRAM-18

DSP/ CODEC/ DAC SECTION PART-18

U0030 **BAHDM-0678**

Model No. TX-SR309 / HT-R290 / HT-R390 / HT-R548 / HT-RC330
Schematic Diagram (Part-18) DSP/CODEC/DAC Section

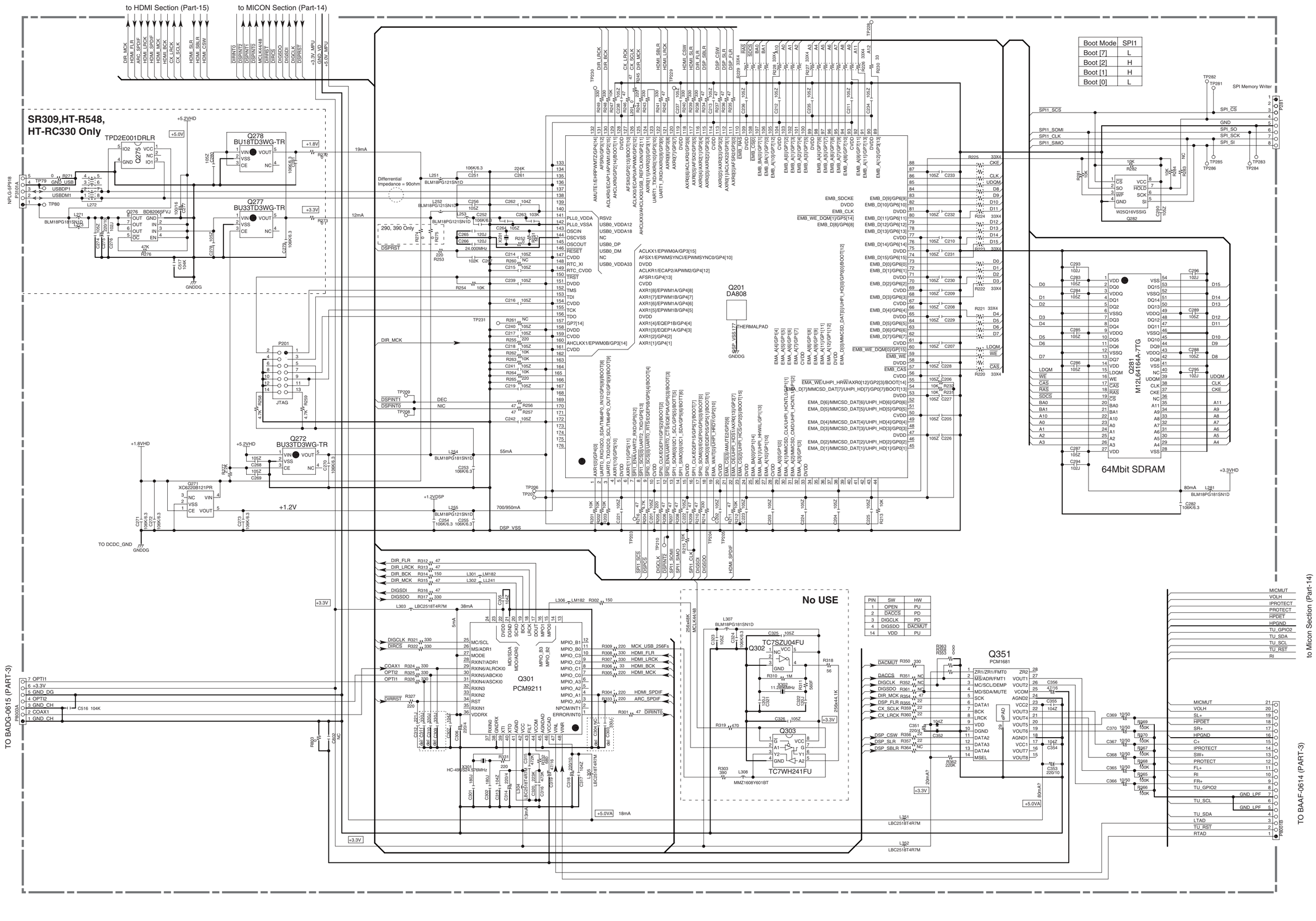

Boot Mode	SPI1
Boot [7]	L
Boot [2]	H
Boot [1]	H
Boot [0]	L

PIN	SW	HW
1	OPEN	PU
2	DACCS	PD
3	DIGCLK	PD
4	DIGSDO	DACMUT
14	VDD	PU

SCHEMATIC DIAGRAM/ BLOCK DIAGRAM-19

1ST DSP MEMORY SECTION PART-19

Model No. TX-NR509/TX-NA509/TX-NA509V SCHEMATIC DIAGRAM (PART-19)
1stDSP Memory Section

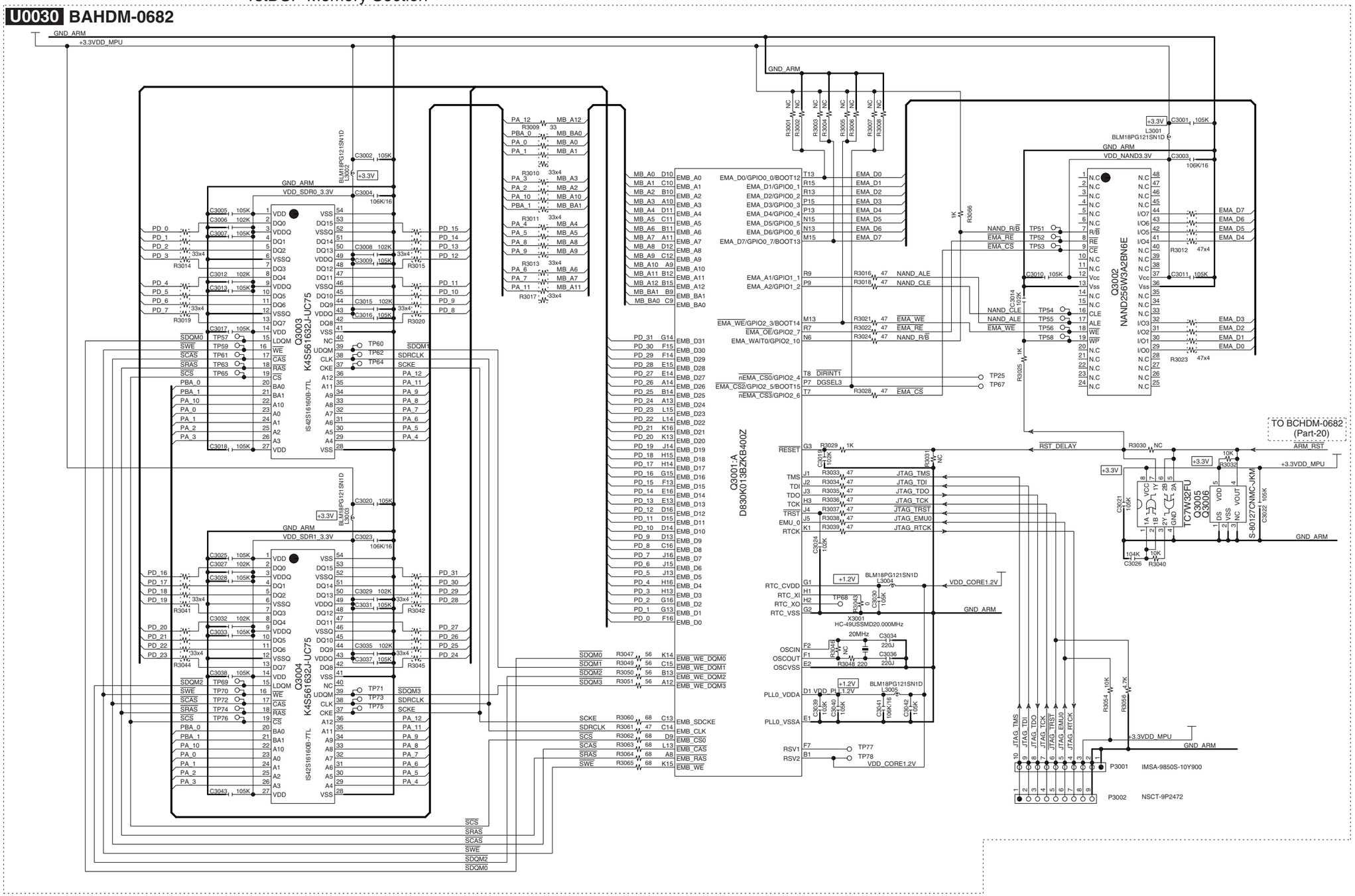

SCHEMATIC DIAGRAM/ BLOCK DIAGRAM-19

DSP MEMORY SECTION PART-19

Model No. TX-NR(A)579,TX-NR(A)609,HT-RC360,DTR-20.3,DTR-30.3 SCHEMATIC DIAGRAM (PART-19) DSP Memory Section

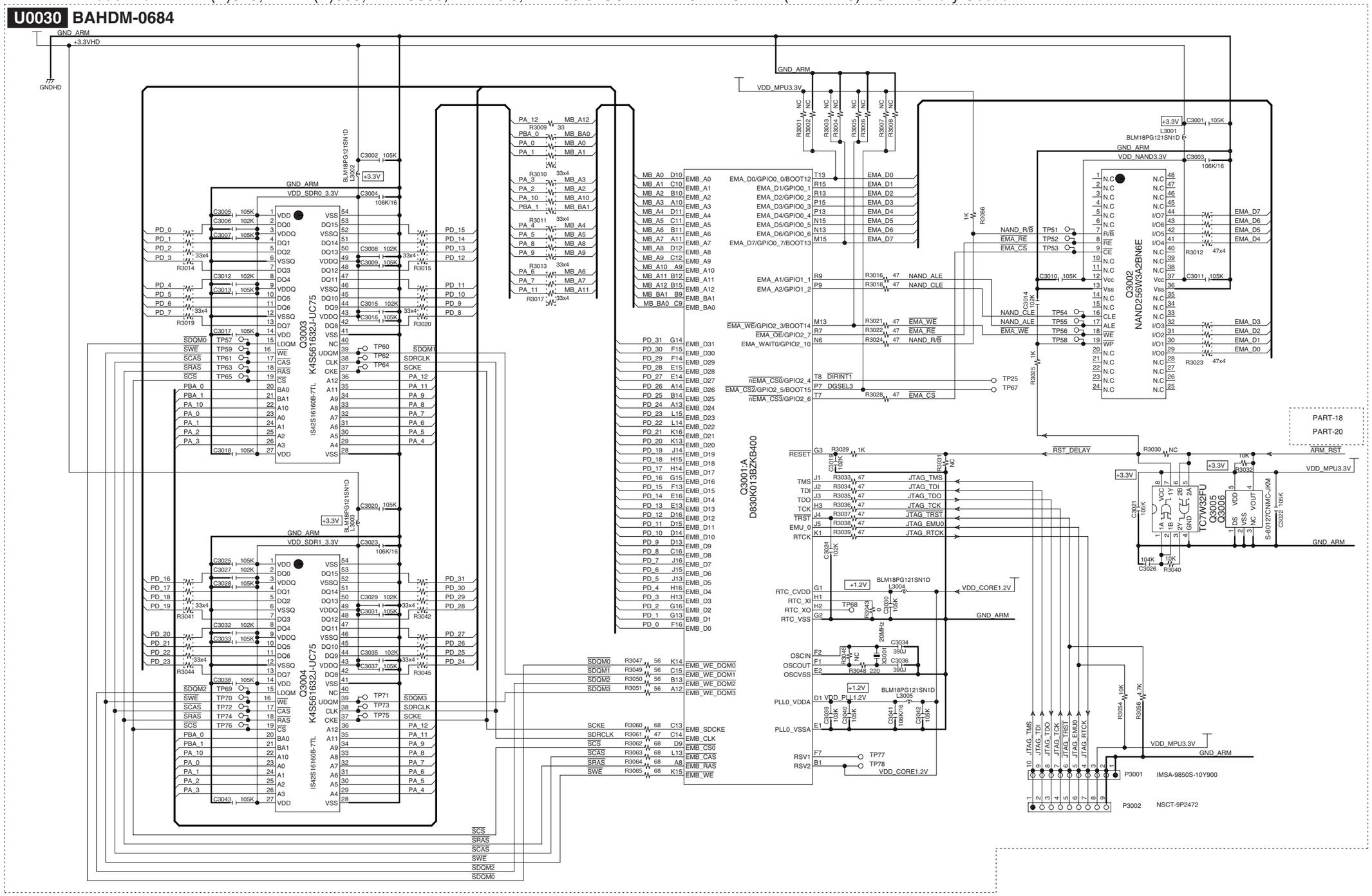

SCHEMATIC DIAGRAM/ BLOCK DIAGRAM-20

NET/ USB POWER SECTION
PART-20

U0030 BAHDM-0682

Model No. TX-NR509/TX-NA509/TX-NA509V

SCHEMATIC DIAGRAM (PART-20)
NET/USB Power Section

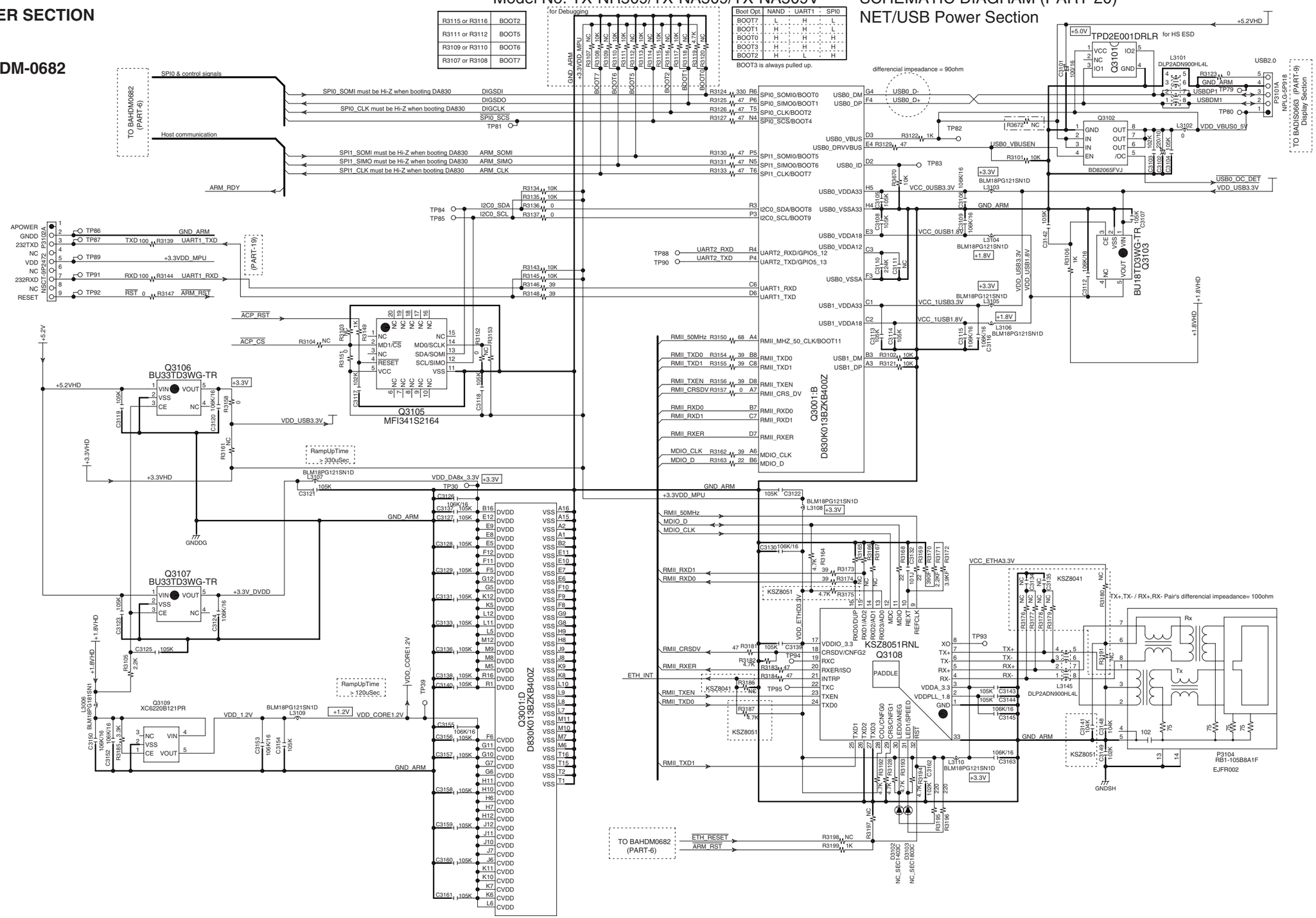

R3115 or R3116	BOOT2
R3111 or R3112	BOOT5
R3109 or R3110	BOOT6
R3107 or R3108	BOOT7

for Debugging

Boot Opt.	NAND	UART1	SPI0
BOOT7	L	H	L
BOOT1	H	H	L
BOOT0	H	H	H
BOOT3	H	H	H
BOOT2	H	L	H

BOOT3 is always pulled up.

SCHEMATIC DIAGRAM/ BLOCK DIAGRAM-20

Model No. TX-NR(A)579,TX-NR(A)609,HT-RC360,DTR-20.3,DTR-30.3

NET/ USB POWER SECTION
PART-20

U0030 BAHDM-0684

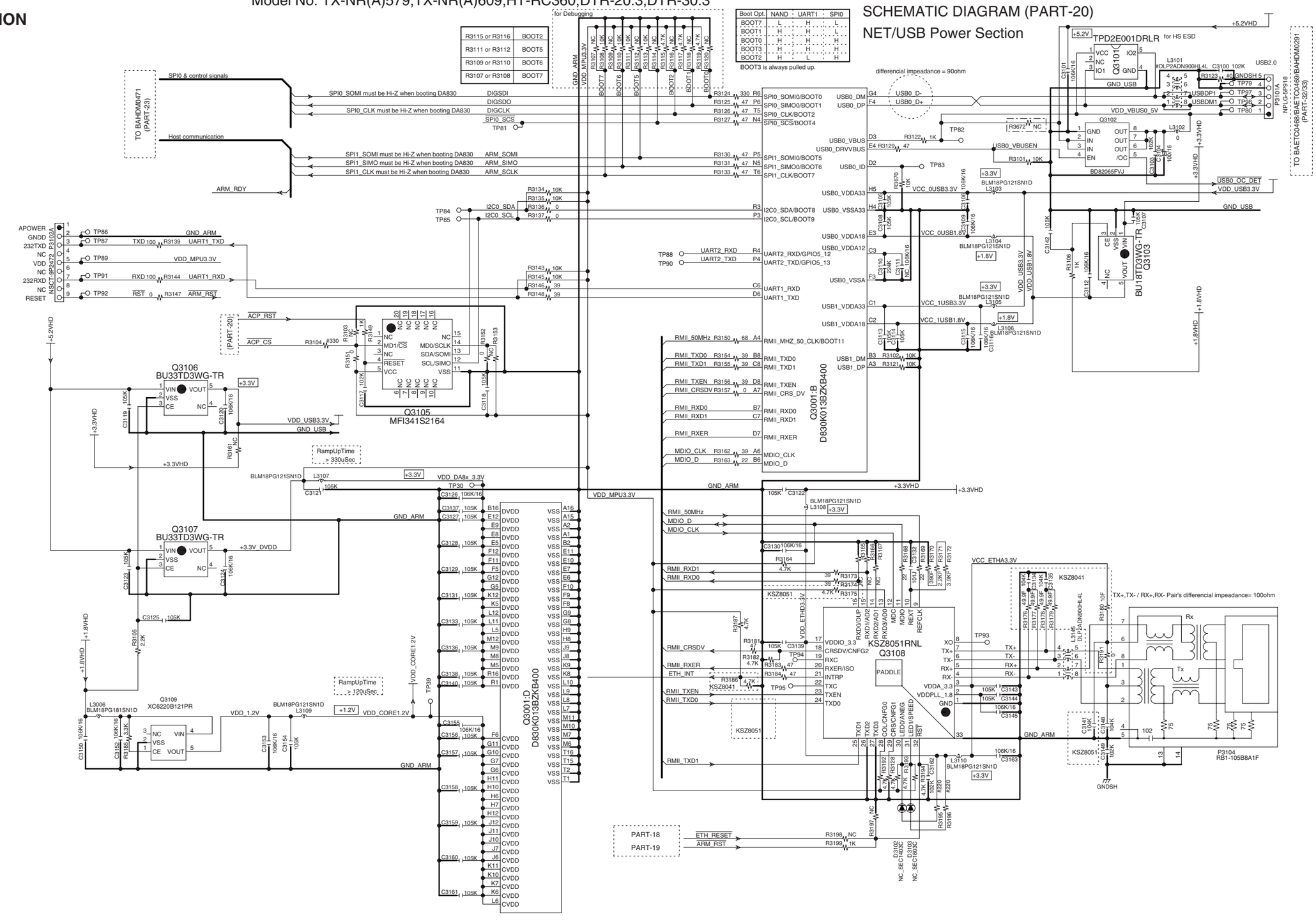

Boot Opt.	NAND	UART1	SPI0
BOOT7	L	H	L
BOOT1	H	H	L
BOOT0	H	H	H
BOOT3	H	H	H
BOOT2	H	L	H

BOOT3 is always pulled up.

R3115 or R3116	BOOT2
R3111 or R3112	BOOT5
R3109 or R3110	BOOT6
R3107 or R3108	BOOT7

SCHEMATIC DIAGRAM/ BLOCK DIAGRAM-21

D-SUB (PC) SECTION

PART-21

Model No. TX-NR609/TX-NA609/DTR-20.3/DTR-30.3/HT-R690/HT-R990
Schematic Diagram (PART-21) DSUB(PC) Section

U0041 **BAETC-0646**

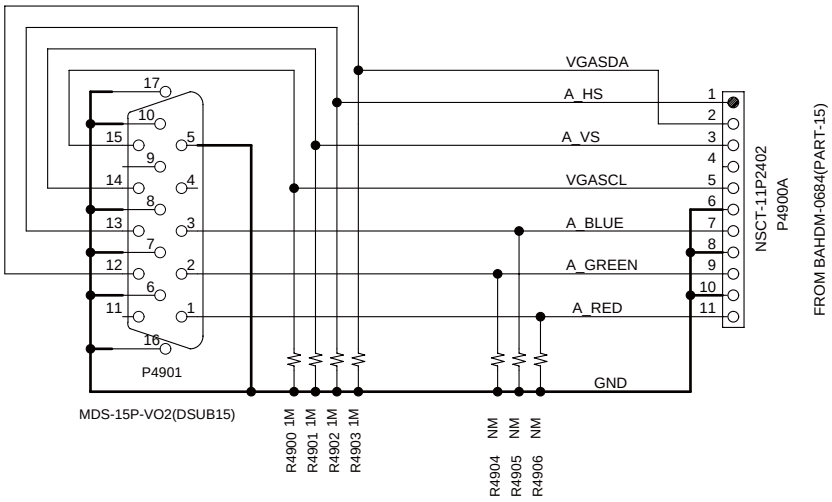

HT-R390

<Note>

Parts marked by '**NSP**' are generally unavailable because they are not in our Master Spare Parts List.

NOTE : THE COMPONENTS IDENTIFIED BY THE MARK ! ARE CRITICAL FOR RISK OF FIRE AND ELECTRIC SHOCK. REPLACE ONLY WITH PART NUMBER SPECIFIED.

<Notes>

<MDC> : 120V,Canadian model for HT-S3400

<MMQ> : 220-240V,Hong kong model for HT-S3400

<MMK> : 220-240V,Korean model for HT-S3400

<MDS> : 120V, Brazilian model for HT-S3400

<MPP_H> : 230V,CE(European) country model for HT-S3405

<MPP_A> : 230V,CE(European) country model for AVX-390

<MPB> : 230V,UK model for AVX-390

EXPLODED VIEW PARTS LIST

REF. NO.	PART NAME	DESCRIPTION	Q'TY	PART NO. (SN)	REMARKS
[CHASSIS SCREW]					
A001	CHASSIS	TX-SR307	1	27100532E	
A003	LEG	(B)	4	27175464	
A005	CUSHION	(ZUL)	4	28141877	
A007	SCREW	3TTB+8B(3BC)	4	838430088GR	
A009	HOLDER	KGLS-8RT	3	27190503A	
A010	HOLDER	KGPS-8RF	1	27191044	
A011	HOLDER	KGLS-10RT	1	27190428A	
A013	HOLDER	KGPS-14RF	2	27190802	
A015	HOLDER	KGPS-14RF	1	27190802	
A017	HOLDER	KGLS-16S	1	27190607	
A019	HOLDER	KGPS-16RF	1	27190991	
A021	HOLDER	KGLS-22S	2	27190369	
A025	SCREW	4TTC+8C(3BC)	4	830440089GR	
A030	HEAT SINK	390P-2	1	27160658	
A032	RETAINER	(HL)	1	27142159	
A034	RETAINER	(HR)	1	27142223A	
A036	SCREW	3TTB+8B(3BC)	4	838430088GR	
A038	SCREW	3TTB+8B(3BC)	2	838430088GR	
A040	SCREW	3TTB+8B(3BC)	3	838430088GR	
A041	CLIP	CS-1U	1	27255004	
A042	SCREW	3TTB+8B(3BC)	2	838430088GR	
A043	SCREW	3TTB+8B(3CM)SR	1	801637	
A050	SCREW	3SMS8WSW+18B3CM	4	801636	

A054	SCREW	3TTB+8B(3BC)	1	838430088GR		
A055	TAPE	TAPE(CLOTH-8U)	1	29110082		
A056	BUSHING	S-RELIEF #2271	1	27300750	!	<MPB, MPP_H, MDC, MMK, MMQ, MPP_A>
A060	WIRE TIE	BSK-1	7	260208		
A101	REAR PANEL	390DC	1	27124225A	N	<MDC>
A101	REAR PANEL	390PP	1	27124226B	N	<MPB, MPP_A, MPP_H>
A101	REAR PANEL	390MK	1	27124227A	N	<MMK, MMQ>
A101	REAR PANEL	HTR390 DS	1	27124293A	N	<MDS>
A102	CUSHION	---	2	28141799		
A103	SCREW	3P+6FN(3BC)	5	82143006GR		<MPB, MPP_A, MDC, MDS, MMK, MMQ, MPP_H>
A105	SCREW	3TTB+8B(3BC)	23	838430088GR		<MPB, MPP_A, MDC, MDS, MMK, MMQ, MPP_H>
A109	SCREW	3P+6FN(3BC)	2	82143006GR		<MPB, MPP_A, MDC, MDS, MMK, MMQ, MPP_H>
A110	SCREW	3TTF+10B(3BC)	2	835430108GR		<MDS>
A111	TAPE	TAPE(CLOTH-16U)	1	29110083		<MDS>
A112	TAPE	TAPE(CLOTH-16U)	1	29110083		
[CABINET]						
A201	F PANEL	HT-R390_C(B)DC	1	27213424A	N	<MDC, MDS>
A201	F PANEL	HT-R390_C(B)PP	1	27213425A	N	<MPB, MPP_A, MMK, MMQ, MPP_H>
A202	CLEAR PLT	TX-SR309 MDC	1	28192334B		<MDC, MDS>
A202	CLEAR PLT	TX-SR309 MPP	1	28192335B	N	<MPB, MPP_A, MMK, MMQ, MPP_H>
A207	BADGE	---	1	28135317		
A211	KNOB	(TONE)(B)	1	28326912		
A213	KNOB	(INP)(B)	1	28326908B		
A214	KNOB	(INP-LR)(B)	2	28326910B		
A216	KNOB	(SEL)	1	28326906A		
A217	KNOB	(STBY)(B)	1	28326904		
A219	KNOB	(CUR)	1	28326907B		
A221	IB CUSHION	W15 x 3t TAPE	1	28141585		
A225	SCREW	2.6TTB+8B(3BC)	22	838426088GR		
A255	SCREW	3TTB+8B(3BC)	3	838430088GR		
A256	SCREW	3TTB+8B(3BC)	1	838430088GR		
A260	SCREW	3TTB+8B(3BC)	4	838430088GR		
A268	CUSHION	5 x 20 t=4	1	28141681		
A270	CUSHION	(FELT) t1 x 20 x 10	4	28141859		
A273	HOLDER	KGLS-4S	2	27190009		
A321	KNOB	(VOL)AS(B)	1	28326914		
A340	COVER	(B) (Bent)	1	28210089A		
A340	COVER	(B) (Not Bent)	1	28210089AZ		
A342	SCREW	3TTB+8B(3BC)	9	838430088GR		

A350	PLATE	(COVER)B	1	27262881	N	<MMQ>
A354	HOLDER	(PLATE)	6	27191337		<MMQ>
A360	LABEL	(COVER)	1	29390767		
A362	LABEL	HOOKUP-ONKYO	1	29363194		<MDC, MDS>
A364	CUSHION	T5 x Φ12 x 6	2	28141867		
[TRANS COIL]						
T901	P TRANS	NPT-1603D	1	2302008	!	<MDC, MDS>
T901	P TRANS	NPT-1603P	1	2302009	!	<MPB, MPP_A, MPP_H>
T901	P TRANS	NPT-1603M	1	2302010	!	<MMK, MMQ>
[SW TRM]						
F6901	FUSE	8A-T/UL-ST2	1	252261GR	!	
F6902	FUSE	8A-T/UL-ST2	1	252261GR	!	
F901	FUSE	4A-SE-EAK FUSE	1	252077GR	!	<MPB, MPP_A, MMK, MMQ, MPP_H>
F901	FUSE	8A-UL/T-233	1	252329GR	!	<MDC, MDS>
F901 or	FUSE	8A-T/UL-ST2	(1)	252261GR	!	<MDC, MDS>
F901 or	FUSE	4A-SE-TL250V	(1)	252277GR	!	<MPB, MPP_A, MMK, MMQ, MPP_H>
F901E	LABEL	T4AL250V	1	29361732A		<MPB, MPP_A, MMK, MMQ, MPP_H>
P101	FFC	NCFC7-091512	1	2047091512		
P2001	FFC	NCFC5-071012	1	2045071012		
P2800	FFC	NCFC5-091012	1	2045091012		
P701	FFC	NCFC5-232212	1	2045232212		
P703	FFC	NCFC5-072512	1	2045072512		
P8001	FFC	NCFC5-211012	1	2045211012		
P8002	FFC	NCFC5-091512	1	2045091512		
P901	AC CORD	AS-BS	1	253198LTK	!	<MPB, MMQ>
P901	AC CORD	AS-CEE-2	1	253306VOL	!	<MPP_A, MMK, MPP_H>
P901	AC CORD	AS-UC-2	1	253368AYUN	!	<MDC>
P901 or	AC CORD	AS-BS	(1)	253198VOL	!	<MPB>
P901 or	AC CORD	AS-UC-2	(1)	253368BLTK	!	<MDC>
P901 or	AC CORD	AS-CEE-2	(1)	253374YUN	!	<MPP_A, MMK, MPP_H>
P901B	FASTON AS	FASTON SOCKET	1	1F999026A	!	<MDS>
P907	AC INLET	R301X2PSn	1	25053358	!	<MDS>
[TUNER UNIT]						
U001	**U0010+U0011+U0012+U0013+U0014+U0015+ U0016**	**BAAF-0614-1D ***	**1**	**1B258514-1D**	**N**	**<MDC>**
U001		**BAAF-0614-1E ***	**1**	**1B258514-1E**	**N**	**<MMQ>**
U001		**BAAF-0614-1E ***	**1**	**1B258514-1E**	**N**	**<MMK>**
U001		**BAAF-0614-1D ***	**1**	**1B258514-1D**	**N**	**<MDS>**
U001		**BAAF-0614-1F ***	**1**	**1B258514-1F**	**N**	**<MPP_H, MPP_A>**

U001		**BAAF-0614-1F ***	**1**	**1B258514-1F**	**N**	**<MPB>**
U0010	Power Amp / Audio Input Terminals PC board ass'y	BAAF-0614-1D	1	1B2585614-1D	**N**	<MDC>
U0010		BAAF-0614-1E	1	1B2585614-1E	**N**	<MMQ>
U0010		BAAF-0614-1E	1	1B2585614-1E	**N**	<MMK>
U0010		BAAF-0614-1D	1	1B2585614-1D	**N**	<MDS>
U0010		BAAF-0614-1F	1	1B2585614-1F	**N**	<MPP_H, MPP_A>
U0010		BAAF-0614-1F	1	1B2585614-1F	**N**	<MPB>
U0011	Digital Input Terminals PC board ass'y	BADG-0615-1D	1	1B2585615-1D	**N**	<MDC>
U0011		BADG-0615-1E	1	1B2585615-1E	**N**	<MMQ>
U0011		BADG-0615-1E	1	1B2585615-1E	**N**	<MMK>
U0011		BADG-0615-1D	1	1B2585615-1D	**N**	<MDS>
U0011		BADG-0615-1F	1	1B2585615-1F	**N**	<MPP_H, MPP_A>
U0011		BADG-0615-1F	1	1B2585615-1F	**N**	<MPB>
U0012	Thermal Senser PC board ass'y	BAETC-0616-1D	1	1B2585616-1D	**N**	<MDC>
U0012		BAETC-0616-1E	1	1B2585616-1E	**N**	<MMQ>
U0012		BAETC-0616-1E	1	1B2585616-1E	**N**	<MMK>
U0012		BAETC-0616-1D	1	1B2585616-1D	**N**	<MDS>
U0012		BAETC-0616-1F	1	1B2585616-1F	**N**	<MPP_H, MPP_A>
U0012		BAETC-0616-1F	1	1B2585616-1F	**N**	<MPB>
U0013	Spacer PC board ass'y	BAETC-0617-1D	1	1B2585617-1D	**N**	<MDC>
U0013		BAETC-0617-1E	1	1B2585617-1E	**N**	<MMQ>
U0013		BAETC-0617-1E	1	1B2585617-1E	**N**	<MMK>
U0013		BAETC-0617-1D	1	1B2585617-1D	**N**	<MDS>
U0013		BAETC-0617-1F	1	1B2585617-1F	**N**	<MPP_H, MPP_A>
U0013		BAETC-0617-1F	1	1B2585617-1F	**N**	<MPB>
U0014	Terminal PC board ass'y	BAETC-0618-1D	1	1B2585618-1D	**N**	<MDC>
U0014		BAETC-0618-1E	1	1B2585618-1E	**N**	<MMQ>
U0014		BAETC-0618-1E	1	1B2585618-1E	**N**	<MMK>
U0014		BAETC-0618-1D	1	1B2585618-1D	**N**	<MDS>
U0014		BAETC-0618-1F	1	1B2585618-1F	**N**	<MPP_H, MPP_A>
U0014		BAETC-0618-1F	1	1B2585618-1F	**N**	<MPB>
U0015	FFC Fixture PC board ass'y	BAETC-0619-1D	1	1B2585619-1D	**N**	<MDC>
U0015		BAETC-0619-1E	1	1B2585619-1E	**N**	<MMQ>
U0015		BAETC-0619-1E	1	1B2585619-1E	**N**	<MMK>
U0015		BAETC-0619-1D	1	1B2585619-1D	**N**	<MDS>
U0015		BAETC-0619-1F	1	1B2585619-1F	**N**	<MPP_H, MPP_A>
U0015		BAETC-0619-1F	1	1B2585619-1F	**N**	<MPB>
U0016	Power supply PC board ass'y	BAETC-0620-1D	1	1B2585620-1D	**N**	<MDC>

U0016		BAETC-0620-1E	1	1B2585620-1E	N	<MMQ>
U0016		BAETC-0620-1E	1	1B2585620-1E	N	<MMK>
U0016		BAETC-0620-1D	1	1B2585620-1D	N	<MDS>
U0016		BAETC-0620-1F	1	1B2585620-1F	N	<MPP_H, MPP_A>
U0016		BAETC-0620-1F	1	1B2585620-1F	N	<MPB>
U002	**U0020+U0021+U0022+U0023+U0024**	**BADIS-0654-1C ***	**1**	**1B258554-1C**	**N**	**<MDC>**
U002		**BADIS-0654-1G ***	**1**	**1B258554-1G**	**N**	**<MMQ>**
U002		**BADIS-0654-1G ***	**1**	**1B258554-1G**	**N**	**<MMK>**
U002		**BADIS-0654-1C ***	**1**	**1B258554-1C**	**N**	**<MDS>**
U002		**BADIS-0654-1G ***	**1**	**1B258554-1G**	**N**	**<MPP_H, MPP_A>**
U002		**BADIS-0654-1G ***	**1**	**1B258554-1G**	**N**	**<MPB>**
U0020	Display PC board ass'y	BADIS-0654-1C	1	1B2585654-1C	N	<MDC>
U0020		BADIS-0654-1G	1	1B2585654-1G	N	<MMQ>
U0020		BADIS-0654-1G	1	1B2585654-1G	N	<MMK>
U0020		BADIS-0654-1C	1	1B2585654-1C	N	<MDS>
U0020		BADIS-0654-1G	1	1B2585654-1G	N	**<MPP_H, MPP_A>**
U0020		BADIS-0654-1G	1	1B2585654-1G	N	<MPB>
U0021	Standby switch PC board ass'y	BADIS-0655-1C	1	1B2585655-1C	N	<MDC>
U0021		BADIS-0655-1G	1	1B2585655-1G	N	<MMQ>
U0021		BADIS-0655-1G	1	1B2585655-1G	N	<MMK>
U0021		BADIS-0655-1C	1	1B2585655-1C	N	<MDS>
U0021		BADIS-0655-1G	1	1B2585655-1G	N	<MPP_H, MPP_A>
U0021		BADIS-0655-1G	1	1B2585655-1G	N	<MPB>
U0022	Video PC board ass'y	BAVD-0656-1C	1	1B2585656-1C	N	<MDC>
U0022		BAVD-0656-1G	1	1B2585656-1G	N	<MMQ>
U0022		BAVD-0656-1G	1	1B2585656-1G	N	<MMK>
U0022		BAVD-0656-1C	1	1B2585656-1C	N	<MDS>
U0022		BAVD-0656-1G	1	1B2585656-1G	N	<MPP_H, MPP_A>
U0022		BAVD-0656-1G	1	1B2585656-1G	N	<MPB>
U0023	HP Jack PC board ass'y	BAETC-0658-1C	1	1B2585658-1C	N	<MDC>
U0023		BAETC-0658-1G	1	1B2585658-1G	N	<MMQ>
U0023		BAETC-0658-1G	1	1B2585658-1G	N	<MMK>
U0023		BAETC-0658-1C	1	1B2585658-1C	N	<MDS>
U0023		BAETC-0658-1G	1	1B2585658-1G	N	<MPP_H, MPP_A>
U0023		BAETC-0658-1G	1	1B2585658-1G	N	<MPB>
U0024	Primary Wiring PC board ass'y	BAPS-0659-1C	1	1B2585659-1C	N	<MDC>
U0024		BAPS-0659-1G	1	1B2585659-1G	N	<MMQ>
U0024		BAPS-0659-1G	1	1B2585659-1G	N	<MMK>
U0024		BAPS-0659-1C	1	1B2585659-1C	N	<MDS>

U0024		BAPS-0659-1G	1	1B2585659-1G	N	<MPP_H, MPP_A>
U0024		BAPS-0659-1G	1	1B2585659-1G	N	<MPB>
U003	**U0030 x 2**	**BAHDM-0678-1C ***	**1**	**1B258578-1C**	**N**	**<MDC>**
U003		**BAHDM-0678-1D ***	**1**	**1B258578-1D**	**N**	**<MMQ>**
U003		**BAHDM-0678-1D ***	**1**	**1B258578-1D**	**N**	**<MMK>**
U003		**BAHDM-0678-1C ***	**1**	**1B258578-1C**	**N**	**<MDS>**
U003		**BAHDM-0678-1E ***	**1**	**1B258578-1E**	**N**	**<MPP_H, MPP_A>**
U003		**BAHDM-0678-1E ***	**1**	**1B258578-1E**	**N**	**<MPB>**
U0030	HDMI PC board ass'y	BAHDM-0678-1C	1	1B2585678-1C	N	<MDC>
U0030		BAHDM-0678-1D	1	1B2585678-1D	N	<MMQ>
U0030		BAHDM-0678-1D	1	1B2585678-1D	N	<MMK>
U0030		BAHDM-0678-1C	1	1B2585678-1C	N	<MDS>
U0030		BAHDM-0678-1E	1	1B2585678-1E	N	<MPP_H, MPP_A>
U0030		BAHDM-0678-1E	1	1B2585678-1E	N	<MPB>
U010	TUNER UNIT	KST-MW004MS1-S89S	1	240171		<MDC, MDS>
U010	TUNER UNIT	KST-MW104MS1-S89	1	240172		<MPB, MPP_A, MMK, MMQ, MPP_H>

HT-R390

PACKING PROCEDURES PARTS LIST

REF. NO.	PART NAME	DESCRIPTION	Q'TY	PART NO. (SN)		REMARKS
[PACKING]						
A601	PAD	(AS)HTR290	1	29092579A		<MDC, MDS, MMK, MMQ>
A601	PAD	(AS)HTR390	1	29092582A	N	<MPB, MPP_A, MPP_H>
A605	POLY BAG	w850 x d650	1	29100245		
A606	TAPE	(SEROHAN)NITTO NO.29	1	29110149		
A608	SHEET	---	1	29095906		<MPB, MPP_A, MDC, MDS, MMK, MPP_H>
A608	SHEET	T0.5 x 600 x 500	1	29096097		<MMQ>
A611	TAPE	(SEROHAN)NITTO NO.29	1	29110149		
A704A	LABEL	(DES)390BMDC	1	29391476	N	<MDC>
A704A	LABEL	(DES)390BMMK	1	29391477	N	<MMK>
A704A	LABEL	(DES)390BMMQ	1	29391478	N	<MMQ>
A704A	LABEL	(DES)390BMPP	1	29391479	N	<MPP_H>
A704A	LABEL	(DES)390C2BMPP	1	29391480	N	<MPP_A>
A704A	LABEL	(DES)390C2BMPB	1	29391481	N	<MPB>
A704A	LABEL	(DES)390MDS	1	29391558	N	<MDS>
[ACCESSARY]						
A672	POLY BAG	w250 x d350	1	29100250A		<MPB>
A672	POLY BAG	w250 x d350	2	29100250A		<MPP_A>

A672	POLY BAG	w250 x d350	1	29100250A		<MDC, MMK, MMQ>
A672	POLY BAG	w250 x d350	2	29100250A		<MPP_H>
A674	POLY BAG	D250 x d300 x W300(t0.04)	1	29100256A		
A676	TAPE	(SEROHAN)NITTO NO.29	1	29110149		
A677	TAPE	(SEROHAN)NITTO NO.29	1	29110149		<MPP_A, MPP_H>
A678	SHEET	(PAD)	1	29096131		
A801	INS MANUAL	En(HTR390)	1	29400598	N	<MPB, MPP_A, MDC, MDS, MMK, MMQ, MPP_H>
A802	INS MANUAL	U2EnFr(HTP-390)	1	29400629		<MDC, MDS, MMK, MMQ>
A802	INS MANUAL	U2EnDe(HTP-344)	1	29400631		<MPB>
A804	INS MANUAL	FrEs(HTR390)	1	29400601	N	<MPP_A, MDC, MDS, MPP_H>
A805	INS MANUAL	ItDe(HTR390)	1	29400602	N	<MPP_A, MPP_H>
A806	INS MANUAL	NISv(HTR390)	1	29400603	N	<MPP_A, MPP_H>
A807	INS MANUAL	Ct(HTS3400)	1	29400597	N	<MMQ>
A807	INS MANUAL	U2EnDe(HTP-348)	1	29400630		<MPP_H>
A807	INS MANUAL	U2EnDe(HTP-344)	1	29400631		<MPP_A>
A809	INS MANUAL	Ar(HTS3400)	1	29400596	N	<MMQ>
A810	INS MANUAL	Ar(QC ImportantSheet)	1	29344373B		<MMQ>
A811	INS MANUAL	En-QSS(HTS3400)	1	29400594	N	<MDC, MDS, MMK, MMQ>
A811	INS MANUAL	En-QSS(HTS3405)	1	29400599	N	<MPP_H>
A811	INS MANUAL	En-QSS(AVX390)	1	29400600	N	<MPB, MPP_A>
A814	INS MANUAL	DaFiNo(HTR390)	1	29400604	N	<MPP_A>
A826	INST SHEET	U11(2010_RIHD)	1	29355782		<MPB, MPP_A, MDC, MDS, MMK, MMQ, MPP_H>
A830	INST SHEET	WEEE	1	29355793A		<MPB, MPP_A, MPP_H>
A835	HANDBILL	(UP-A1)US	1	29380155A		<MDC, MDS>
A835	HANDBILL	(UP-A1)EU	1	29380156A		<MPB, MPP_A, MPP_H>
A855	REMO CON	RC-762M	1	24140762		
A858	ANT COIL	NMA-3057	1	232140		
A859	FM ANT AS	Type W	1	292191		
A861	BATTERY	R6/AA(UM-3)	2	3010194		<MPB, MPP_A, MMK, MMQ, MPP_H>
A861	BATTERY	R6/AA(UM-3)	2	3010506		<MDC, MDS>
A861 or	BATTERY	R6/AA(UM-3)	(2)	3010054		<MPB, MPP_A, MDC, MDS, MMK, MMQ, MPP_H>
A861 or	BATTERY	R6/AA(UM-3)	(2)	3010194		<MDC, MDS>
A884	WRNTY CARD	MGQ	1	29365099A		<MMQ>
A885	WRNTY CARD	(ONKYO)	1	29365135		<MDC, MDS>

HT-R390

PC BOARD PARTS LIST

U001 **U0010 + U0011 + U0012 + U0013 + U0014 + U0015 + U0016**

U0010	Power Amp / Audio Input Terminals PC board	BAAF-0614-1D/ 1E/ 1F
U0011	Digital Input Terminals PC board	BADG-0615-1D/ 1E/ 1F
U0012	Thermal Senser PC board	BAETC-0616-1D/ 1E/ 1F
U0013	Spacer PC board	BAETC-0617-1D/ 1E/ 1F
U0014	Terminal PC board	BAETC-0618-1D/ 1E/ 1F
U0015	FFC Fixture PC board	BAETC-0619-1D/ 1E/ 1F
U0016	Power supply PC board	BAETC-0620-1D/ 1E/ 1F

CIRCUIT NO.	PART NAME	DESCRIPTION	Q'TY	PART NO. (SN)	REMARKS
[SEMI CONDUCTOR]					
D131	C-DIODE	DA2J10100	1	223303R2	N
D131 or	C-DIODE	KDS4148U	(1)	223283R2	
D132	C-DIODE	DA2J10100	1	223303R2	N
D132 or	C-DIODE	KDS4148U	(1)	223283R2	
D4171	ZENER D	MTZJ6.8B	1	224470682T	
D4172	ZENER D	MTZJ6.8B	1	224470682T	
D4300	DIODE	RL1N4003	1	22380260T	
D4300 or	DIODE	GP104003E	(1)	22380035T	
D4301	DIODE	RL1N4003	1	22380260T	
D4301 or	DIODE	GP104003E	(1)	22380035T	
D4302	DIODE	RL1N4003	1	22380260T	
D4302 or	DIODE	GP104003E	(1)	22380035T	
D4303	DIODE	RL1N4003	1	22380260T	
D4303 or	DIODE	GP104003E	(1)	22380035T	
D4304	DIODE	1SS133	1	223163T	
D4305	DIODE	1SS133	1	223163T	
D4400	ZENER D	DZ2J056M0L	1	224760560R2	
D4400 or	ZENER D	UDZS5.6B	(1)	224550560R2	
D6020	C-DIODE	DA2J10100	1	223303R2	N
D6020 or	C-DIODE	1SS352	(1)	223234R2	
D6020 or	C-DIODE	1SS355	(1)	223269R2	
D6020 or	C-DIODE	MA2J111	(1)	223279R2	
D6020 or	C-DIODE	KDS4148U	(1)	223283R2	
D6021	C-DIODE	DA2J10100	1	223303R2	N
D6021 or	C-DIODE	1SS352	(1)	223234R2	
D6021 or	C-DIODE	1SS355	(1)	223269R2	
D6021 or	C-DIODE	MA2J111	(1)	223279R2	
D6021 or	C-DIODE	KDS4148U	(1)	223283R2	
D6022	C-DIODE	DA2J10100	1	223303R2	N

D6022 or	C-DIODE	1SS352	(1)	223234R2		
D6022 or	C-DIODE	1SS355	(1)	223269R2		
D6022 or	C-DIODE	MA2J111	(1)	223279R2		
D6022 or	C-DIODE	KDS4148U	(1)	223283R2		
D6023	C-DIODE	DA2J10100	1	223303R2	N	
D6023 or	C-DIODE	1SS352	(1)	223234R2		
D6023 or	C-DIODE	1SS355	(1)	223269R2		
D6023 or	C-DIODE	MA2J111	(1)	223279R2		
D6023 or	C-DIODE	KDS4148U	(1)	223283R2		
D6024	C-DIODE	DA2J10100	1	223303R2	N	
D6024 or	C-DIODE	1SS352	(1)	223234R2		
D6024 or	C-DIODE	1SS355	(1)	223269R2		
D6024 or	C-DIODE	MA2J111	(1)	223279R2		
D6024 or	C-DIODE	KDS4148U	(1)	223283R2		
D6027	C-DIODE	DA2J10100	1	223303R2		<MDC, MDS, MMK, MMQ, MPB, MPP_A, MPP_H>
D6027 or	C-DIODE	1SS352	(1)	223234R2		<MDC, MDS, MMK, MMQ, MPB, MPP_A, MPP_H>
D6027 or	C-DIODE	1SS355	(1)	223269R2		<MDC, MDS, MMK, MMQ, MPB, MPP_A, MPP_H>
D6027 or	C-DIODE	MA2J111	(1)	223279R2		<MDC, MDS, MMK, MMQ, MPB, MPP_A, MPP_H>
D6027 or	C-DIODE	KDS4148U	(1)	223283R2		<MDC, MDS, MMK, MMQ, MPB, MPP_A, MPP_H>
D6031	DIODE	1SS133	1	223163T		
D6032	DIODE	1SS133	1	223163T		
D6051	C-DIODE	DA2J10100	1	223303R2	N	
D6051 or	C-DIODE	1SS352	(1)	223234R2		
D6051 or	C-DIODE	1SS355	(1)	223269R2		
D6051 or	C-DIODE	MA2J111	(1)	223279R2		
D6051 or	C-DIODE	KDS4148U	(1)	223283R2		
D6052	C-DIODE	DA2J10100	1	223303R2	N	
D6052 or	C-DIODE	1SS352	(1)	223234R2		
D6052 or	C-DIODE	1SS355	(1)	223269R2		
D6052 or	C-DIODE	MA2J111	(1)	223279R2		
D6052 or	C-DIODE	KDS4148U	(1)	223283R2		
D6053	C-DIODE	DA2J10100	1	223303R2	N	
D6053 or	C-DIODE	1SS352	(1)	223234R2		
D6053 or	C-DIODE	1SS355	(1)	223269R2		
D6053 or	C-DIODE	MA2J111	(1)	223279R2		
D6053 or	C-DIODE	KDS4148U	(1)	223283R2		
D6055	C-DIODE	DA2J10100	1	223303R2	N	
D6055 or	C-DIODE	1SS352	(1)	223234R2		
D6055 or	C-DIODE	1SS355	(1)	223269R2		

D6055 or	C-DIODE	MA2J111	(1)	223279R2		
D6055 or	C-DIODE	KDS4148U	(1)	223283R2		
D6057	C-DIODE	DA2J10100	1	223303R2		<MDC, MDS, MMK, MMQ, MPB, MPP_A, MPP_H>
D6057 or	C-DIODE	1SS352	(1)	223234R2		<MDC, MDS, MMK, MMQ, MPB, MPP_A, MPP_H>
D6057 or	C-DIODE	1SS355	(1)	223269R2		<MDC, MDS, MMK, MMQ, MPB, MPP_A, MPP_H>
D6057 or	C-DIODE	MA2J111	(1)	223279R2		<MDC, MDS, MMK, MMQ, MPB, MPP_A, MPP_H>
D6057 or	C-DIODE	KDS4148U	(1)	223283R2		<MDC, MDS, MMK, MMQ, MPB, MPP_A, MPP_H>
D6704	ZENER D	DZ2J033M0L	1	224760330R2		
D6704 or	ZENER D	UDZS3.3B	(1)	224550330R2		
D6901	DIODE	D5SBA60	1	22380070		
D6901A	HEAT SINK	RAD-083	1	27160271		
D6901C	SCREW	3P+10FN(3BC)	1	82143010GR		
D6902	C-DIODE	DA2J10100	1	223303R2	N	
D6902 or	C-DIODE	1SS352	(1)	223234R2		
D6902 or	C-DIODE	1SS355	(1)	223269R2		
D6902 or	C-DIODE	MA2J111	(1)	223279R2		
D6902 or	C-DIODE	KDS4148U	(1)	223283R2		
D6903	C-DIODE	DA2J10100	1	223303R2	N	
D6903 or	C-DIODE	1SS352	(1)	223234R2		
D6903 or	C-DIODE	1SS355	(1)	223269R2		
D6903 or	C-DIODE	MA2J111	(1)	223279R2		
D6903 or	C-DIODE	KDS4148U	(1)	223283R2		
D960	DIODE	RL1N4003	1	22380260T		
D961	DIODE	RL1N4003	1	22380260T		
D964	ZENER D	DZ2J360M0L	1	224763600R2		
D964 or	ZENER D	UDZS36B	(1)	224553600R2		
Q131	IC	TC74HCU04AF	1	222740046R2TO		
Q4001	IC	R2A15218FP	1	22242605R3		
Q4003	IC	NJM4580M-D	1	22241448R2		
Q4100	TR	RN1441	1	2215410R2		
Q4101	TR	RN1441	1	2215410R2		
Q4102	TR	RN1441	1	2215410R2		
Q4103	TR	RN1441	1	2215410R2		
Q4104	TR	RN1441	1	2215410R2		
Q4107	TR	RN1441	1	2215410R2		
Q4117	TR	RN1441	1	2215410R2		
Q4130	IC	NJM4580M-D	1	22241448R2		
Q4140	IC	NJM4580M-D	1	22241448R2		
Q4142	IC	NJM4580M-D	1	22241448R2		

Q4143	IC	NJM4580M-D	1	22241448R2	
Q4170	IC	78M12HF(NJM78M12FA)	1	222780125JRC	
Q4170 or	IC	78M12(AN78M12F)	(1)	222780125MAT	
Q4170 or	IC	MPC78M12AHF-AZ	(1)	222780125NEC	
Q4170A	HEAT-SINK	HEAT-SINK(RAD-68)	1	27160211	
Q4170B	SCREW	3P+10FN(3BC)	1	82143010GR	
Q4171	IC	79M12HF(NJM79M12FA)	1	222790125JRC	
Q4171 or	IC	79M12F(AN79M12F)	(1)	222790125MAT	
Q4171 or	IC	79M12HF(MPC79M12HF)	(1)	222790125NEC	
Q4171A	HEAT-SINK	HEAT-SINK(RAD-68)	1	27160211	
Q4171B	SCREW	3P+10FN(3BC)	1	82143010GR	
Q4400	IC	NJM4580M-D	1	22241448R2	
Q4401	TR	2SC2235-Y(TPE6_F)	1	2211654T	
Q6001	IC	STK-443-530-E	1	222148	
Q6002	IC	STK-443-530-E	1	222148	<MDC, MDS, MMK, MMQ, MPB, MPP_A, MPP_H>
Q6010	TR	2SC2240-BL(TPE2_F)	1	2211406T	
Q6011	TR	2SC2240-BL(TPE2_F)	1	2211406T	
Q6012	TR	2SC2240-BL(TPE2_F)	1	2211406T	
Q6013	TR	2SC2240-BL(TPE2_F)	1	2211406T	
Q6014	TR	2SC2240-BL(TPE2_F)	1	2211406T	
Q6017	TR	2SC2240-BL(TPE2_F)	1	2211406T	<MDC, MDS, MMK, MMQ, MPB, MPP_A, MPP_H>
Q6021	TR	2SA1163-BL(TE85L_F)	1	2216756R2	
Q6022	TR	2SC2240-BL(TPE2_F)	1	2211406T	
Q6023	TR	2SC2240-BL(TPE2_F)	1	2211406T	
Q6024	TR	2SA1163-BL(TE85L_F)	1	2216756R2	
Q6051	TR	KRC105S	1	2217290R2	
Q6051 or	TR	RN1405	(1)	2214500R2	
Q6051 or	TR	DTC123JKA	(1)	2216690R2	
Q6052	TR	KRC105S	1	2217290R2	
Q6052 or	TR	RN1405	(1)	2214500R2	
Q6052 or	TR	DTC123JKA	(1)	2216690R2	
Q6053	TR	KRC105S	1	2217290R2	
Q6053 or	TR	RN1405	(1)	2214500R2	
Q6053 or	TR	DTC123JKA	(1)	2216690R2	
Q6380	IC	LM61CIZ	1	22242212	
Q6380A	RETAINER	(PTH)	1	27141884-1	
Q6707	TR	KTC3875-GR	1	2216175R2	
Q6707 or	TR	2SC2712-GR	(1)	2213145R2	
Q6708	TR	KRC105S	1	2217290R2	

Q6708 or	TR	RN1405	(1)	2214500R2	
Q6708 or	TR	DTC123JKA	(1)	2216690R2	
Q960	TR	2SC2235-Y(TPE6_F)	1	2211654T	
Q960 or	TR	2SC2235-O(TPE6_F)	(1)	2211653T	
[TRANS COIL]					
L131	CHOKE COIL	LBC2518T2R2M	1	231364M022R2	
L133	CHOKE COIL	LBC2518T470M	1	231364M470R2	
L134	CHOKE COIL	LBC2518T470M	1	231364M470R2	
L135	EMIFIL	BK1608HS102-T	1	230955R2	
L4001	CHOKE COIL	LBC2518T2R2M	1	231364M022R2	
L6000	S COIL	SC-0.8X6.0X29.5T-4RV-C	1	231394AS	
L6001	S COIL	SC-0.8X6.0X29.5T-4RV-C	1	231394AS	
L6002	S COIL	SC-0.8X6.0X29.5T-4RV-C	1	231394AS	
L6003	S COIL	SC-0.8X6.0X29.5T-4RV-C	1	231394AS	
L6004	S COIL	SC-0.8X6.0X29.5T-4RV-C	1	231394AS	
L6007	S COIL	SC-0.8X6.0X29.5T-4RV-C	1	231394AS	<MDC, MDS, MMK, MMQ, MPB, MPP_A, MPP_H>
[CAPACITOR]					
C130	C-CERA C	CK725F1E-104Z1	1	332161040R1	
C131	C-CERA C	CC725CH1H-101J1	1	342101014R1	
C133	C-CERA C	CK725B1C-104K1	1	332121045R1	
C135	C-CERA C	CC725CH1H-080D1	1	342100802R1	
C139	UTSP C	CE04W10V-220M(UTSP)	1	397532217T	
C140	C-CERA C	CK725F1E-104Z1	1	332161040R1	
C141	C-CERA C	CK725F1E-104Z1	1	332161040R1	
C142	C-CERA C	CK725F1E-104Z1	1	332161040R1	
C143	C-CERA C	CC725CH1H-330J1	1	342103304R1	
C144	C-CERA C	CC725CH1H-330J1	1	342103304R1	
C145	UTSP C	CE04W10V-220M(UTSP)	1	397532217T	
C4003	UPZ C	2AUPZTF221JE	1	376332214T	
C4004	UPZ C	2AUPZTF221JE	1	376332214T	
C4007	C-CERA C	CC725CH1H-221J1	1	342102214R1	
C4008	C-CERA C	CC725CH1H-221J1	1	342102214R1	
C4013	C-CERA C	CC725CH1H-221J1	1	342102214R1	
C4014	C-CERA C	CC725CH1H-221J1	1	342102214R1	
C4017	C-CERA C	CC725CH1H-221J1	1	342102214R1	
C4018	C-CERA C	CC725CH1H-221J1	1	342102214R1	
C4019	UPZ C	2AUPZTF221JE	1	376332214T	
C4020	UPZ C	2AUPZTF221JE	1	376332214T	
C4050	UTSP C	CE04W25V-47M(UTSP)	1	397554707T	

C4051	UTSP C	CE04W25V-47M(UTSP)	1	397554707T	
C4052	UTSP C	CE04W25V-47M(UTSP)	1	397554707T	
C4053	UTSP C	CE04W25V-47M(UTSP)	1	397554707T	
C4054	UTSP C	CE04W25V-47M(UTSP)	1	397554707T	
C4057	UTSP C	CE04W25V-47M(UTSP)	1	397554707T	
C4060	UTSP C	CE04W50V 47M(UTSP)	1	397584707T	
C4061	UTSP C	CE04W50V 47M(UTSP)	1	397584707T	
C4062	TF C	ECQ-V50V-474J	1	374724744T	
C4063	TF C	ECQ-V50V-823J	1	374728234T	
C4064	TF C	ECQ-V50V-223J	1	374722234T	
C4065	TF C	ECQ-V50V-474J	1	374724744T	
C4066	TF C	ECQ-V50V-823J	1	374728234T	
C4067	TF C	ECQ-V50V-223J	1	374722234T	
C4070	UTSP C	CE04W50V 47M(UTSP)	1	397584707T	
C4071	UTSP C	CE04W50V 47M(UTSP)	1	397584707T	
C4072	UTSP C	CE04W50V 47M(UTSP)	1	397584707T	
C4073	UTSP C	CE04W50V 47M(UTSP)	1	397584707T	
C4074	UTSP C	CE04W50V 47M(UTSP)	1	397584707T	
C4077	UTSP C	CE04W50V 47M(UTSP)	1	397584707T	
C4085	UTSP C	CE04W25V-47M(UTSP)	1	397554707T	
C4086	UTSP C	CE04W25V-47M(UTSP)	1	397554707T	
C4090	C-CERA C	CC725CH1H-101J1	1	342101014R1	
C4091	C-CERA C	CC725CH1H-101J1	1	342101014R1	
C4100	UTSP C	CE04W50V 47M(UTSP)	1	397584707T	
C4101	UTSP C	CE04W50V 47M(UTSP)	1	397584707T	
C4102	UTSP C	CE04W50V 47M(UTSP)	1	397584707T	
C4103	UTSP C	CE04W50V 47M(UTSP)	1	397584707T	
C4104	UTSP C	CE04W50V 47M(UTSP)	1	397584707T	
C4107	UTSP C	CE04W50V-2.2M(UTSP)	1	397580227T	<MDC, MDS, MMK, MMQ, MPB, MPP_A, MPP_H>
C4110	UTSP C	CE04W25V-220M(UTSP)	1	397552217T	
C4111	UTSP C	CE04W25V-220M(UTSP)	1	397552217T	
C4130	UTSP C	CE04W50V 47M(UTSP)	1	397584707T	
C4131	C-CERA C	CC725CH1H-221J1	1	342102214R1	
C4132	TF C	ECQ-V50V-103J	1	374721034T	
C4166	UTSP C	CE04W25V-220M(UTSP)	1	397552217T	
C4167	UTSP C	CE04W25V-220M(UTSP)	1	397552217T	
C4170	UTSP C	CE04W50V-1M(UTSP)	1	397580107T	
C4171	UTSP C	CE04W50V-1M(UTSP)	1	397580107T	
C4172	UTSP C	CE04W25V-220M(UTSP)	1	397552217T	

C4173	UTSP C	CE04W25V-220M(UTSP)	1	397552217T
C4186	UTSP C	CE04W16V-470M(UTSP)	1	397544717T
C4187	UTSP C	CE04W16V-470M(UTSP)	1	397544717T
C4204	C-CERA C	CC725CH1H-102J1	1	342101024R1
C4205	C-CERA C	CC725CH1H-102J1	1	342101024R1
C4209	UTSP C	CE04W25V-47M(UTSP)	1	397554707T
C4210	UTSP C	CE04W25V-47M(UTSP)	1	397554707T
C4300	TF C	ECQ-V50V-334J	1	374723344T
C4301	VR C	CE04W35V-1000M(VR)	1	394661027S
C4301 or	JAMICON	CE04W35V-1000M	(1)	398561027S
C4302	VR C	CE04W35V-470M(VR)	1	394664717T
C4302 or	JAMICON	CE04W35V-470M	(1)	398564717T
C4402	UTSP C	CE04W25V-47M(UTSP)	1	397554707T
C4403	UTSP C	CE04W25V-47M(UTSP)	1	397554707T
C4404	UTSP C	CE04W25V-47M(UTSP)	1	397554707T
C4405	UTSP C	CE04W25V-47M(UTSP)	1	397554707T
C4406	UTSP C	CE04W25V-47M(UTSP)	1	397554707T
C4407	UTSP C	CE04W25V-47M(UTSP)	1	397554707T
C4408	C-CERA C	CK725F1E-104Z1	1	332161040R1
C4409	C-CERA C	CK725F1E-104Z1	1	332161040R1
C4410	C-CERA C	CC725CH1H-681J1	1	342106814R1
C4411	C-CERA C	CC725CH1H-681J1	1	342106814R1
C4412	C-CERA C	CK725F1A-105Z1	1	332181050R1
C4413	C-CERA C	CK725F1A-105Z1	1	332181050R1
C4414	C-CERA C	CK725F1A-105Z1	1	332181050R1
C4415	C-CERA C	CK725F1A-105Z1	1	332181050R1
C4416	C-CERA C	CC725CH1H-101J1	1	342101014R1
C4417	C-CERA C	CC725CH1H-101J1	1	342101014R1
C4420	MKT C	B32529C0332J289	1	376493324T
C4421	MKT C	B32529C0332J289	1	376493324T
C4422	MKT C	B32529C0332J289	1	376493324T
C4423	MKT C	B32529C0332J289	1	376493324T
C4424	MKT C	B32529C0332J289	1	376493324T
C4427	TF C	ECQ-V50V-333J	1	374723334T
C4430	UPZ C	2AUPZTF151JE	1	376331514T
C4431	UPZ C	2AUPZTF151JE	1	376331514T
C4432	UPZ C	2AUPZTF151JE	1	376331514T
C4433	C-CERA C	CC725CH1H-151J1	1	342101514R1
C4434	C-CERA C	CC725CH1H-151J1	1	342101514R1

C4437	MKT C	B32529C0102J289	1	376491024T	
C6009	TF C	ECQ-V50V-333J	1	374723334T	
C6010	UTSP C	CE04W50V 47M(UTSP)	1	397584707T	
C6011	UTSP C	CE04W50V 47M(UTSP)	1	397584707T	
C6012	UTSP C	CE04W50V 47M(UTSP)	1	397584707T	
C6013	UTSP C	CE04W50V 47M(UTSP)	1	397584707T	
C6014	UTSP C	CE04W50V 47M(UTSP)	1	397584707T	
C6017	UTSP C	CE04W50V 47M(UTSP)	1	397584707T	<MDC, MDS, MMK, MMQ, MPB, MPP_A, MPP_H>
C6020	UPZ C	2AUPZTF471JE	1	376334714T	
C6021	UPZ C	2AUPZTF471JE	1	376334714T	
C6022	UPZ C	2AUPZTF471JE	1	376334714T	
C6023	UPZ C	2AUPZTF471JE	1	376334714T	
C6024	UPZ C	2AUPZTF471JE	1	376334714T	
C6027	UPZ C	2AUPZTF471JE	1	376334714T	<MDC, MDS, MMK, MMQ, MPB, MPP_A, MPP_H>
C6030	UTSP C	CE04W25V-220M(UTSP)	1	397552217T	
C6031	UTSP C	CE04W25V-220M(UTSP)	1	397552217T	
C6032	UTSP C	CE04W25V-220M(UTSP)	1	397552217T	
C6033	UTSP C	CE04W25V-220M(UTSP)	1	397552217T	
C6034	UTSP C	CE04W25V-220M(UTSP)	1	397552217T	
C6037	UTSP C	CE04W25V-220M(UTSP)	1	397552217T	<MDC, MDS, MMK, MMQ, MPB, MPP_A, MPP_H>
C6040	CERA C	CC45CH50V-030D	1	345340302T	
C6041	CERA C	CC45CH50V-030D	1	345340302T	
C6042	CERA C	CC45CH50V-030D	1	345340302T	
C6043	CERA C	CC45CH50V-030D	1	345340302T	
C6044	CERA C	CC45CH50V-030D	1	345340302T	
C6047	CERA C	CC45CH50V-030D	1	345340302T	<MDC, MDS, MMK, MMQ, MPB, MPP_A, MPP_H>
C6050	C-CERA C	CK725B1H-472K1	1	332104725R1	
C6051	C-CERA C	CK725B1H-472K1	1	332104725R1	
C6052	C-CERA C	CK725B1H-472K1	1	332104725R1	
C6053	C-CERA C	CK725B1H-472K1	1	332104725R1	
C6054	C-CERA C	CK725B1H-472K1	1	332104725R1	
C6057	C-CERA C	CK725B1H-472K1	1	332104725R1	<MDC, MDS, MMK, MMQ, MPB, MPP_A, MPP_H>
C6060	TF C	ECQ-V50V-473J	1	374724734T	
C6061	TF C	ECQ-V50V-473J	1	374724734T	
C6062	TF C	ECQ-V50V-473J	1	374724734T	
C6063	TF C	ECQ-V50V-473J	1	374724734T	
C6064	TF C	ECQ-V50V-473J	1	374724734T	
C6067	TF C	ECQ-V50V-473J	1	374724734T	<MDC, MDS, MMK, MMQ, MPB, MPP_A, MPP_H>
C6070	TF C	ECQ-V50V-103J	1	374721034T	

C6071	TF C	ECQ-V50V-103J	1	374721034T	
C6072	TF C	ECQ-V50V-103J	1	374721034T	
C6073	TF C	ECQ-V50V-103J	1	374721034T	
C6074	TF C	ECQ-V50V-103J	1	374721034T	
C6077	TF C	ECQ-V50V-103J	1	374721034T	<MDC, MDS, MMK, MMQ, MPB, MPP_A, MPP_H>
C6080	MKT C	B32529C0102J289	1	376491024T	
C6081	MKT C	B32529C0102J289	1	376491024T	
C6082	MKT C	B32529C0102J289	1	376491024T	
C6083	MKT C	B32529C0102J289	1	376491024T	
C6084	MKT C	B32529C0102J289	1	376491024T	
C6087	MKT C	B32529C0102J289	1	376491024T	<MDC, MDS, MMK, MMQ, MPB, MPP_A, MPP_H>
C6088	MKT C	B32529C0102J289	1	376491024T	
C6089	MKT C	B32529C0102J289	1	376491024T	
C6090	UTSP C	CE04W25V-100M(UTSP)	1	397551017T	
C6091	UTSP C	CE04W50V-1M(UTSP)	1	397580107T	
C6092	UTSP C	CE04W50V-1M(UTSP)	1	397580107T	
C6093	C-CERA C	CK725F1E-104Z1	1	332161040R1	
C6094	C-CERA C	CK725F1E-104Z1	1	332161040R1	
C6101	UTSP C	CE04W63V-100M(UTSP)	1	397571017T	
C6102	UTSP C	CE04W63V-100M(UTSP)	1	397571017T	
C6103	UTSP C	CE04W50V 47M(UTSP)	1	397584707T	
C6104	UTSP C	CE04W63V-100M(UTSP)	1	397571017T	
C6105	UTSP C	CE04W63V-100M(UTSP)	1	397571017T	
C6106	UTSP C	CE04W50V 47M(UTSP)	1	397584707T	
C6107	UTSP C	CE04W63V-100M(UTSP)	1	397571017T	
C6108	UTSP C	CE04W63V-100M(UTSP)	1	397571017T	
C6111	C-CERA C	CC725CH1H-102J1	1	342101024R1	
C6112	C-CERA C	CC725CH1H-102J1	1	342101024R1	
C6113	C-CERA C	CC725CH1H-102J1	1	342101024R1	
C6115	C-CERA C	CC725CH1H-102J1	1	342101024R1	
C6117	C-CERA C	CC725CH1H-102J1	1	342101024R1	<MDC, MDS, MMK, MMQ, MPB, MPP_A, MPP_H>
C6630	C-CERA C	CK725F1E-104Z1	1	332161040R1	
C6706	UTSP C	CE04W50V-10M(UTSP)	1	397581007T	
C6901	ELECT C	CE69W56V-8200MB	1	3504416	<MDC, MDS, MPB, MPP_A, MPP_H>
C6901	ELECT C	CE69W63V-8200MB	1	3504420	<MMK, MMQ>
C6902	ELECT C	CE69W56V-8200MB	1	3504416	<MDC, MDS, MPB, MPP_A, MPP_H>
C6902	ELECT C	CE69W63V-8200MB	1	3504420	<MMK, MMQ>
C6911	C-CERA C	CC725CH1H-102J1	1	342101024R1	
C6912	TF C	ECQ-V50V-334J	1	374723344T	

C6913	TF C	ECQ-V50V-334J	1	374723344T	
C6917	C-CERA C	CC725CH1H-102J1	1	342101024R1	
C950	TF C	ECQ-V50V-104J	1	374721044T	
C960	VR C	CE04W63V-220M(VR)	1	394672217T	
C960 or	JAMICON	CE04W63V-220M	(1)	398572217T	
C961	UTSP C	CE04W50V 47M(UTSP)	1	397584707T	
C962	TF C	ECQ-V50V-104J	1	374721044T	
C963	UTSP C	CE04W50V 47M(UTSP)	1	397584707T	
[RESISTOR]					
R131	C-CARBON R	RN72K1J-750JE	1	435037504R1	
R133	C-CARBON R	RN72K1J-100JE	1	435031004R1	
R137	C-CARBON R	RN72K1J-103JE	1	435031034R1	
R139	C-CARBON R	RN72K1J-823JE	1	435038234R1	
R141	C-CARBON R	RN72K1J-470JE	1	435034704R1	
R142	C-CARBON R	RN72K1J-470JE	1	435034704R1	
R4000	C-CARBON R	RN72K1J-331JE	1	435033314R1	
R4001	METAL O R	RS1WBJ-10	1	443621004T	<MDC, MDS, MPB, MPP_A, MPP_H>
R4001	METAL R	RNU1WCJ-4.7	1	453630474T	<MMK, MMQ>
R4003	C-CARBON R	RN72K1J-331JE	1	435033314R1	
R4004	C-CARBON R	RN72K1J-331JE	1	435033314R1	
R4005	METAL O R	RS1WBJ-15	1	443621504T	
R4007	C-CARBON R	RN72K1J-331JE	1	435033314R1	
R4008	C-CARBON R	RN72K1J-331JE	1	435033314R1	
R4013	C-CARBON R	RN72K1J-331JE	1	435033314R1	
R4014	C-CARBON R	RN72K1J-331JE	1	435033314R1	
R4015	C-CARBON R	RN72K1J-222JE	1	435032224R1	
R4016	C-CARBON R	RN72K1J-222JE	1	435032224R1	
R4017	C-CARBON R	RN72K1J-331JE	1	435033314R1	
R4018	C-CARBON R	RN72K1J-331JE	1	435033314R1	
R4019	C-CARBON R	RN72K1J-331JE	1	435033314R1	
R4020	C-CARBON R	RN72K1J-331JE	1	435033314R1	
R4023	C-CARBON R	RN72K1J-000JE	1	435030004R1	
R4043	C-CARBON R	RN72K1J-104JE	1	435031044R1	
R4044	C-CARBON R	RN72K1J-104JE	1	435031044R1	
R4047	C-CARBON R	RN72K1J-104JE	1	435031044R1	
R4048	C-CARBON R	RN72K1J-104JE	1	435031044R1	
R4053	C-CARBON R	RN72K1J-104JE	1	435031044R1	
R4054	C-CARBON R	RN72K1J-104JE	1	435031044R1	
R4055	C-CARBON R	RN72K1J-224JE	1	435032244R1	

R4056	C-CARBON R	RN72K1J-224JE	1	435032244R1	
R4057	C-CARBON R	RN72K1J-104JE	1	435031044R1	
R4058	C-CARBON R	RN72K1J-104JE	1	435031044R1	
R4059	C-CARBON R	RN72K1J-104JE	1	435031044R1	
R4060	C-CARBON R	RN72K1J-104JE	1	435031044R1	
R4067	C-CARBON R	RN72K1J-104JE	1	435031044R1	
R4068	C-CARBON R	RN72K1J-104JE	1	435031044R1	
R4078	C-CARBON R	RN72K1J-473JE	1	435034734R1	
R4079	C-CARBON R	RN72K1J-473JE	1	435034734R1	
R4080	C-CARBON R	RN72K1J-104JE	1	435031044R1	<MDC, MDS, MMK, MMQ, MPB, MPP_A, MPP_H>
R4081	C-CARBON R	RN72K1J-104JE	1	435031044R1	<MDC, MDS, MMK, MMQ, MPB, MPP_A, MPP_H>
R4082	C-CARBON R	RN72K1J-104JE	1	435031044R1	
R4085	C-CARBON R	RN72K1J-182JE	1	435031824R1	
R4086	C-CARBON R	RN72K1J-182JE	1	435031824R1	
R4087	C-CARBON R	RN72K1J-222JE	1	435032224R1	
R4088	C-CARBON R	RN72K1J-222JE	1	435032224R1	
R4089	C-CARBON R	RN72K1J-000JE	1	435030004R1	
R4090	C-CARBON R	RN72K1J-123JE	1	435031234R1	
R4091	C-CARBON R	RN72K1J-223JE	1	435032234R1	
R4092	C-CARBON R	RN72K1J-331JE	1	435033314R1	
R4093	C-CARBON R	RN72K1J-332JE	1	435033324R1	
R4094	C-CARBON R	RN72K1J-103JE	1	435031034R1	
R4095	C-CARBON R	RN72K1J-103JE	1	435031034R1	
R4096	C-CARBON R	RN72K1J-331JE	1	435033314R1	
R4097	C-CARBON R	RN72K1J-332JE	1	435033324R1	
R4098	C-CARBON R	RN72K1J-123JE	1	435031234R1	
R4099	C-CARBON R	RN72K1J-223JE	1	435032234R1	
R4100	C-CARBON R	RN72K1J-224JE	1	435032244R1	
R4101	C-CARBON R	RN72K1J-224JE	1	435032244R1	
R4102	C-CARBON R	RN72K1J-224JE	1	435032244R1	
R4103	C-CARBON R	RN72K1J-224JE	1	435032244R1	
R4104	C-CARBON R	RN72K1J-224JE	1	435032244R1	
R4107	C-CARBON R	RN72K1J-222JE	1	435032224R1	<MDC, MDS, MMK, MMQ, MPB, MPP_A, MPP_H>
R4110	C-CARBON R	RN72K1J-222JE	1	435032224R1	
R4111	C-CARBON R	RN72K1J-222JE	1	435032224R1	
R4112	C-CARBON R	RN72K1J-222JE	1	435032224R1	
R4113	C-CARBON R	RN72K1J-222JE	1	435032224R1	
R4114	C-CARBON R	RN72K1J-222JE	1	435032224R1	
R4117	C-CARBON R	RN72K1J-271JE	1	435032714R1	

R4127	C-CARBON R	RN72K1J-101JE	1	435031014R1
R4130	C-CARBON R	RN72K1J-221JE	1	435032214R1
R4131	C-CARBON R	RN72K1J-473JE	1	435034734R1
R4132	C-CARBON R	RN72K1J-153JE	1	435031534R1
R4133	C-CARBON R	RN72K1J-122JE	1	435031224R1
R4134	C-CARBON R	RN72K1J-103JE	1	435031034R1
R4160	METAL R	RNU1WCJ-0.22	1	453632294T
R4161	METAL R	RNU1WCJ-0.22	1	453632294T
R4166	C-CARBON R	RN72K1J-220JE	1	435032204R1
R4167	C-CARBON R	RN72K1J-220JE	1	435032204R1
R4174	METAL O R	RS1WBJ-68	1	443626804T
R4175	METAL O R	RS1WBJ-68	1	443626804T
R4176	METAL O R	RS1WBJ-15	1	443621504T
R4177	METAL O R	RS1WBJ-15	1	443621504T
R4181	C-CARBON R	RN72K1J-224JE	1	435032244R1
R4189	C-CARBON R	RN72K1J-473JE	1	435034734R1
R4190	C-CARBON R	RN72K1J-473JE	1	435034734R1
R4192	C-CARBON R	RN72K1J-224JE	1	435032244R1
R4193	C-CARBON R	RN72K1J-224JE	1	435032244R1
R4194	C-CARBON R	RN72K1J-224JE	1	435032244R1
R4200	C-CARBON R	RN72K1J-220JE	1	435032204R1
R4201	C-CARBON R	RN72K1J-220JE	1	435032204R1
R4400	C-CARBON R	RN72K1J-223JE	1	435032234R1
R4401	C-CARBON R	RN72K1J-223JE	1	435032234R1
R4402	C-CARBON R	RN72K1J-333JE	1	435033334R1
R4403	C-CARBON R	RN72K1J-333JE	1	435033334R1
R4404	C-CARBON R	RN72K1J-223JE	1	435032234R1
R4405	C-CARBON R	RN72K1J-223JE	1	435032234R1
R4406	C-CARBON R	RN72K1J-273JE	1	435032734R1
R4407	C-CARBON R	RN72K1J-273JE	1	435032734R1
R4408	C-CARBON R	RN72K1J-331JE	1	435033314R1
R4409	C-CARBON R	RN72K1J-331JE	1	435033314R1
R4410	C-CARBON R	RN72K1J-104JE	1	435031044R1
R4411	C-CARBON R	RN72K1J-104JE	1	435031044R1
R4412	C-CARBON R	RN72K1J-220JE	1	435032204R1
R4413	C-CARBON R	RN72K1J-220JE	1	435032204R1
R4414	C-CARBON R	RN72K1J-220JE	1	435032204R1
R4415	C-CARBON R	RN72K1J-220JE	1	435032204R1
R4416	C-CARBON R	RN72K1J-471JE	1	435034714R1

R4417	C-CARBON R	RN72K1J-333JE	1	435033334R1	
R4419	C-CARBON R	RN72K1J-000JE	1	435030004R1	
R4420	C-CARBON R	RN72K1J-472JE	1	435034724R1	
R4421	C-CARBON R	RN72K1J-472JE	1	435034724R1	
R4422	C-CARBON R	RN72K1J-472JE	1	435034724R1	
R4423	C-CARBON R	RN72K1J-472JE	1	435034724R1	
R4424	C-CARBON R	RN72K1J-472JE	1	435034724R1	
R4427	C-CARBON R	RN72K1J-472JE	1	435034724R1	
R4430	C-CARBON R	RN72K1J-153JE	1	435031534R1	
R4431	C-CARBON R	RN72K1J-153JE	1	435031534R1	
R4432	C-CARBON R	RN72K1J-153JE	1	435031534R1	
R4433	C-CARBON R	RN72K1J-153JE	1	435031534R1	
R4434	C-CARBON R	RN72K1J-153JE	1	435031534R1	
R4437	C-CARBON R	RN72K1J-153JE	1	435031534R1	
R4440	C-CARBON R	RN72K1J-331JE	1	435033314R1	
R4441	C-CARBON R	RN72K1J-331JE	1	435033314R1	
R4442	C-CARBON R	RN72K1J-331JE	1	435033314R1	
R4443	C-CARBON R	RN72K1J-331JE	1	435033314R1	
R4444	C-CARBON R	RN72K1J-331JE	1	435033314R1	
R4447	C-CARBON R	RN72K1J-331JE	1	435033314R1	
R4450	C-CARBON R	RN72K1J-561JE	1	435035614R1	
R4451	C-CARBON R	RN72K1J-561JE	1	435035614R1	
R4452	C-CARBON R	RN72K1J-561JE	1	435035614R1	
R4453	C-CARBON R	RN72K1J-561JE	1	435035614R1	
R4454	C-CARBON R	RN72K1J-561JE	1	435035614R1	
R4457	C-CARBON R	RN72K1J-561JE	1	435035614R1	
R4601	C-CARBON R	RN72K1J-471JE	1	435034714R1	
R4602	C-CARBON R	RN72K1J-000JE	1	435030004R1	
R6010	C-CARBON R	RN72K1J-102JE	1	435031024R1	
R6011	C-CARBON R	RN72K1J-102JE	1	435031024R1	
R6012	C-CARBON R	RN72K1J-102JE	1	435031024R1	
R6013	C-CARBON R	RN72K1J-102JE	1	435031024R1	
R6014	C-CARBON R	RN72K1J-102JE	1	435031024R1	
R6017	C-CARBON R	RN72K1J-102JE	1	435031024R1	<MDC, MDS, MMK, MMQ, MPB, MPP_A, MPP_H>
R6020	CARBON R	R16J-56K	1	417345634T	
R6021	CARBON R	R16J-56K	1	417345634T	
R6022	CARBON R	R16J-56K	1	417345634T	
R6023	CARBON R	R16J-56K	1	417345634T	
R6024	CARBON R	R16J-56K	1	417345634T	

R6027	CARBON R	R16J-56K	1	417345634T	<MDC, MDS, MMK, MMQ, MPB, MPP_A, MPP_H>
R6030	CARBON R	R16J-2.2K	1	417342224T	
R6031	CARBON R	R16J-2.2K	1	417342224T	
R6032	CARBON R	R16J-2.2K	1	417342224T	
R6033	CARBON R	R16J-2.2K	1	417342224T	
R6034	CARBON R	R16J-2.2K	1	417342224T	
R6037	CARBON R	R16J-2.2K	1	417342224T	<MDC, MDS, MMK, MMQ, MPB, MPP_A, MPP_H>
R6040	CARBON R	R16J-120K	1	417341244T	
R6041	CARBON R	R16J-120K	1	417341244T	
R6042	CARBON R	R16J-120K	1	417341244T	
R6043	CARBON R	R16J-120K	1	417341244T	
R6044	CARBON R	R16J-120K	1	417341244T	
R6047	CARBON R	R16J-120K	1	417341244T	<MDC, MDS, MMK, MMQ, MPB, MPP_A, MPP_H>
R6050	CARBON R	R16J-120K	1	417341244T	
R6051	CARBON R	R16J-120K	1	417341244T	
R6052	CARBON R	R16J-120K	1	417341244T	
R6053	CARBON R	R16J-120K	1	417341244T	
R6054	CARBON R	R16J-120K	1	417341244T	
R6057	CARBON R	R16J-120K	1	417341244T	<MDC, MDS, MMK, MMQ, MPB, MPP_A, MPP_H>
R6070	C-CARBON R	RN72K1J-563JE	1	435035634R1	
R6071	C-CARBON R	RN72K1J-563JE	1	435035634R1	
R6072	C-CARBON R	RN72K1J-563JE	1	435035634R1	
R6073	C-CARBON R	RN72K1J-563JE	1	435035634R1	
R6074	C-CARBON R	RN72K1J-563JE	1	435035634R1	
R6077	C-CARBON R	RN72K1J-563JE	1	435035634R1	<MDC, MDS, MMK, MMQ, MPB, MPP_A, MPP_H>
R6080	C-CARBON R	RN72K1J-123JE	1	435031234R1	
R6081	C-CARBON R	RN72K1J-123JE	1	435031234R1	
R6082	C-CARBON R	RN72K1J-123JE	1	435031234R1	
R6083	C-CARBON R	RN72K1J-123JE	1	435031234R1	
R6084	C-CARBON R	RN72K1J-123JE	1	435031234R1	
R6087	C-CARBON R	RN72K1J-123JE	1	435031234R1	<MDC, MDS, MMK, MMQ, MPB, MPP_A, MPP_H>
R6100	C-CARBON R	RN72K1J-333JE	1	435033334R1	
R6101	C-CARBON R	RN72K1J-333JE	1	435033334R1	
R6102	C-CARBON R	RN72K1J-333JE	1	435033334R1	
R6103	C-CARBON R	RN72K1J-333JE	1	435033334R1	
R6104	C-CARBON R	RN72K1J-333JE	1	435033334R1	
R6107	C-CARBON R	RN72K1J-333JE	1	435033334R1	<MDC, MDS, MMK, MMQ, MPB, MPP_A, MPP_H>
R6110	C-CARBON R	RN72K1J-473JE	1	435034734R1	
R6111	C-CARBON R	RN72K1J-473JE	1	435034734R1	

R6112	C-CARBON R	RN72K1J-473JE	1	435034734R1		
R6113	C-CARBON R	RN72K1J-473JE	1	435034734R1		
R6114	C-CARBON R	RN72K1J-473JE	1	435034734R1		
R6117	C-CARBON R	RN72K1J-473JE	1	435034734R1		<MDC, MDS, MMK, MMQ, MPB, MPP_A, MPP_H>
R6120	C-CARBON R	RN72K1J-473JE	1	435034734R1		
R6121	C-CARBON R	RN72K1J-473JE	1	435034734R1		
R6122	C-CARBON R	RN72K1J-473JE	1	435034734R1		
R6123	C-CARBON R	RN72K1J-473JE	1	435034734R1		
R6124	C-CARBON R	RN72K1J-473JE	1	435034734R1		
R6127	C-CARBON R	RN72K1J-473JE	1	435034734R1		<MDC, MDS, MMK, MMQ, MPB, MPP_A, MPP_H>
R6130	C-CARBON R	RN72K2E-150JE	1	435221504R1		
R6131	C-CARBON R	RN72K2E-150JE	1	435221504R1		
R6132	C-CARBON R	RN72K2E-150JE	1	435221504R1		
R6133	C-CARBON R	RN72K2E-150JE	1	435221504R1		
R6134	C-CARBON R	RN72K2E-150JE	1	435221504R1		
R6137	C-CARBON R	RN72K2E-150JE	1	435221504R1		<MDC, MDS, MMK, MMQ, MPB, MPP_A, MPP_H>
R6140	METAL R	RNU1WCJ-8.2	1	453630824T		
R6141	METAL R	RNU1WCJ-8.2	1	453630824T		
R6142	METAL R	RNU1WCJ-8.2	1	453630824T		
R6143	METAL R	RNU1WCJ-8.2	1	453630824T		
R6144	METAL R	RNU1WCJ-8.2	1	453630824T		
R6147	METAL R	RNU1WCJ-8.2	1	453630824T		<MDC, MDS, MMK, MMQ, MPB, MPP_A, MPP_H>
R6160	METAL O R	RS2WBJ-0.22	1	442722294T	N	
R6161	METAL O R	RS2WBJ-0.22	1	442722294T	N	
R6162	METAL O R	RS2WBJ-0.22	1	442722294T	N	
R6163	METAL O R	RS2WBJ-0.22	1	442722294T	N	
R6164	METAL O R	RS2WBJ-0.22	1	442722294T	N	
R6167	METAL O R	RS2WBJ-0.22	1	442722294T		<MDC, MDS, MMK, MMQ, MPB, MPP_A, MPP_H>
R6170	METAL O R	RS2WBJ-0.22	1	442722294T	N	
R6171	METAL O R	RS2WBJ-0.22	1	442722294T	N	
R6172	METAL O R	RS2WBJ-0.22	1	442722294T	N	
R6173	METAL O R	RS2WBJ-0.22	1	442722294T	N	
R6174	METAL O R	RS2WBJ-0.22	1	442722294T	N	
R6177	METAL O R	RS2WBJ-0.22	1	442722294T		<MDC, MDS, MMK, MMQ, MPB, MPP_A, MPP_H>
R6203	CARBON R	R16J-33K	1	417343334T		
R6204	METAL O R	RS1/2WBJ-100	1	443521014T		
R6205	METAL O R	RS1/2WBJ-100	1	443521014T		
R6206	CARBON R	R16J-33K	1	417343334T		<MDC, MDS, MMK, MMQ, MPB, MPP_A, MPP_H>
R6209	METAL O R	RS1/2WBJ-100	1	443521014T		

R6210	METAL O R	RS1/2WBJ-100	1	443521014T	
R6211	C-CARBON R	RN72K1J-333JE	1	435033334R1	
R6213	C-CARBON R	RN72K1J-103JE	1	435031034R1	
R6214	C-CARBON R	RN72K1J-473JE	1	435034734R1	
R6216	C-CARBON R	RN72K1J-223JE	1	435032234R1	
R6217	C-CARBON R	RN72K1J-473JE	1	435034734R1	
R6218	C-CARBON R	RN72K1J-103JE	1	435031034R1	
R6219	C-CARBON R	RN72K1J-223JE	1	435032234R1	
R6230	C-CARBON R	RN72K2E-150JE	1	435221504R1	
R6231	C-CARBON R	RN72K2E-150JE	1	435221504R1	
R6232	C-CARBON R	RN72K2E-150JE	1	435221504R1	
R6233	C-CARBON R	RN72K2E-150JE	1	435221504R1	
R6234	C-CARBON R	RN72K2E-150JE	1	435221504R1	
R6237	C-CARBON R	RN72K2E-150JE	1	435221504R1	<MDC, MDS, MMK, MMQ, MPB, MPP_A, MPP_H>
R6251	METAL O R	RS1/2WBJ-390	1	443523914T	
R6252	METAL O R	RS1/2WBJ-390	1	443523914T	
R6709	C-CARBON R	RN72K1J-562JE	1	435035624R1	
R6710	C-CARBON R	RN72K1J-562JE	1	435035624R1	
R6902	C-CARBON R	RN72K1J-102JE	1	435031024R1	
R6903	C-CARBON R	RN72K1J-473JE	1	435034734R1	
R6912	METAL R	RNU1/2WCJ-0.1	1	453531094T	
R950	METAL O R	RS1WBJ-10	1	443621004T	
R960	METAL R	RNU1/2WCJ-8.2	1	453530824T	
R961	CARBON R	R16J-3.3	1	417340334T	
R962	C-CARBON R	RN72K1J-822JE	1	435038224R1	
R963	C-CARBON R	RN72K1J-822JE	1	435038224R1	
R964	C-CARBON R	RN72K1J-333JE	1	435033334R1	
[SW TRM]					
E6001	RETAINER	MET37-0002	1	27142009T	
F6901A	FUSE HOL	NSCT-1P2031	1	25052133T	
F6901B	FUSE HOL	NSCT-1P2031	1	25052133T	
F6902A	FUSE HOL	NSCT-1P2031	1	25052133T	
F6902B	FUSE HOL	NSCT-1P2031	1	25052133T	
JL501A	WIRE HOL	NSCT-3P874	1	25051087	
JL502A	WIRE HOL	NSCT-5P876	1	25051089	<MDC, MDS, MMK, MMQ, MPB, MPP_A, MPP_H>
JL503A	WIRE HOL	NSCT-7P878	1	25051091	<MDC, MDS, MMK, MMQ, MPB, MPP_A, MPP_H>
JL600A	WIRE HOL	NSCT-7P898	1	25051111	
JL600B	WIRE HOL	NSCT-7P898	1	25051111	
JL603A	WIRE HOL	NSCT-9P900	1	25051113	

JL603B	WIRE HOL	NSCT-9P900	1	25051113	
JL605B	SOCKET	NSCT-5P97	1	25050269	
JL951A	WIRE HOL	NSCT-5P896	1	25051109	
JL951B	WIRE HOL	NSCT-5P896	1	25051109	
JL952A	WIRE HOL	NSCT-3P894	1	25051107	
JL953B	WIRE TRAP	NPLG-5P588	1	25055626	
JL954A	WIRE HOL	NSCT-9P900	1	25051113	
JL954B	WIRE HOL	NSCT-9P900	1	25051113	
P101B	SOCKET	NSCT-9P2102	1	25052205	
P131	PIN JACK	NPJ-1PDO554	1	25045772	
P4000	ST JACK	MSJ-035-22	1	25045887	
P4000 or	JACK	YKB21-5130	(1)	25045387	
P4002	PIN JACK	NPJ-4PDWR690	1	25045922	
P4005	PIN JACK	NPJ-4PDWWRR624	1	25045845	
P4006	PIN JACK	NPJ-4PDWWRR624	1	25045845	
P6001	TRM	NTM-12PDML362	1	25060433	<MDC, MDS, MMK, MMQ, MPB, MPP_A, MPP_H>
P6001 or	TRM	NTM-12PDML356	(1)	25060427	<MDC, MDS, MMK, MMQ, MPB, MPP_A, MPP_H>
P6002	TRM	NTM-4PDML364	1	25060435	
P6900	CRIMP AS	CRIMP AS	1	20799162UL	
P6901	CRIMP AS	CRIMP AS	1	2069925162UL	
P6902	CRIMP AS	CRIMP AS	1	2069925169UL	
P6903	WS CLAMP	CB-71683(L=50)	1	260261	
P6906	WS CLAMP	CB-71683(L=50)	1	260261	
P6909	WS CLAMP	CB-71683(L=50)	1	260261	
P6913	WS CLAMP	CB-71683(L=50)	1	260261	
P6915	WS CLAMP	CB-71683(L=50)	1	260261	
P703B	SOCKET	NSCT-7P2398	1	25052501	
P8001A	SOCKET	NSCT-21P2412	1	25052515	
P8002A	SOCKET	NSCT-9P2400	1	25052503	
P8003B	PLUG	NPLG-7P0962	1	25056012	
RL660	RELAY	NRL-2P5A-DC24-129	1	25065563A	
RL660 or	RELAY	NRL-2P8A-DC24-144	(1)	25065590	
RL660 or	RELAY	NRL-2P5A-DC24-193	(1)	25065703	
RL662	RELAY	NRL-2P5A-DC24-129	1	25065563A	
RL662 or	RELAY	NRL-2P8A-DC24-144	(1)	25065590	
RL662 or	RELAY	NRL-2P5A-DC24-193	(1)	25065703	
RL663	RELAY	NRL-2P5A-DC24-129	1	25065563A	
RL663 or	RELAY	NRL-2P8A-DC24-144	(1)	25065590	
RL663 or	RELAY	NRL-2P5A-DC24-193	(1)	25065703	

RL667	RELAY	NRL-2P5A-DC24-129	1	25065563A	<MDC, MDS, MMK, MMQ, MPB, MPP_A, MPP_H>
RL667 or	RELAY	NRL-2P8A-DC24-144	(1)	25065590	<MDC, MDS, MMK, MMQ, MPB, MPP_A, MPP_H>
RL667 or	RELAY	NRL-2P5A-DC24-193	(1)	25065703	<MDC, MDS, MMK, MMQ, MPB, MPP_A, MPP_H>
RL669	RELAY	NRL-2P5A-DC24-129	1	25065563A	
RL669 or	RELAY	NRL-2P8A-DC24-144	(1)	25065590	
RL669 or	RELAY	NRL-2P5A-DC24-193	(1)	25065703	
RL691	RELAY	NRL-1P10A-DC12-196	1	25065707	
RL691 or	RELAY	NRL-1P10A-DC12-197	(1)	25065708	
RL691 or	RELAY	NRL-1P10A-DC12-198	(1)	25065709	
RL692	RELAY	NRL-1P10A-DC12-196	1	25065707	
RL692 or	RELAY	NRL-1P10A-DC12-197	(1)	25065708	
RL692 or	RELAY	NRL-1P10A-DC12-198	(1)	25065709	
RL693	RELAY	NRL-2P5A-DC24-129	1	25065563A	
[TUNER UNIT]					
U131	PHT CP	JSR1165-001recieving	1	24120143	
U132	PHT CP	JSR1165-001recieving	1	24120143	

U002	**U0020 + U0021 + U0022 + U0023 + U0024**	
U0020	Display PC board ass'y	BADIS-0654-1C/ 1G
U0021	Standby switch PC board ass'y	BADIS-0655-1C/ 1G
U0022	Video PC board ass'y	BAVD-0656-1C/ 1G
U0023	HP Jack PC board ass'y	BAETC-0658-1C/ 1G
U0024	Primary Wiring PC board ass'y	BAPS-0659-1C/ 1G

CIRCUIT NO.	PART NAME	DESCRIPTION	Q'TY	PART NO. (SN)	REMARKS
[SEMI CONDUCTOR]					
D7002	ZENER D	DZ2J082M0L	1	224760820R2	
D7002 or	ZENER D	UDZS8.2B	(1)	224550820R2	
D7033	ZENER D	DZ2J039M0L	1	224760390R2	
D7033 or	ZENER D	UDZS3.9B	(1)	224550390R2	
D7152	LED	SLI-343Y8C-TE7	1	225490T	
D7301	C-DIODE	DA2J10100	1	223303R2	N
D7301 or	C-DIODE	1SS352	(1)	223234R2	
D7301 or	C-DIODE	1SS355	(1)	223269R2	
D7301 or	C-DIODE	MA2J111	(1)	223279R2	
D7301 or	C-DIODE	KDS4148U	(1)	223283R2	
D7302	C-DIODE	DA2J10100	1	223303R2	N
D7302 or	C-DIODE	1SS352	(1)	223234R2	
D7302 or	C-DIODE	1SS355	(1)	223269R2	

D7302 or	C-DIODE	MA2J111	(1)	223279R2	
D7302 or	C-DIODE	KDS4148U	(1)	223283R2	
D9011	DIODE	D5SBA60	1	22380070F	N
D9014	C-DIODE	DA2J10100	1	223303R2	N
D9014 or	C-DIODE	1SS352	(1)	223234R2	
D9014 or	C-DIODE	1SS355	(1)	223269R2	
D9014 or	C-DIODE	MA2J111	(1)	223279R2	
D9014 or	C-DIODE	KDS4148U	(1)	223283R2	
D9015	C-DIODE	DA2J10100	1	223303R2	N
D9015 or	C-DIODE	1SS352	(1)	223234R2	
D9015 or	C-DIODE	1SS355	(1)	223269R2	
D9015 or	C-DIODE	MA2J111	(1)	223279R2	
D9015 or	C-DIODE	KDS4148U	(1)	223283R2	
D9016	ZENER D	DZ2J062M0L	1	224760620R2	
D9016 or	ZENER D	UDZS6.2B	(1)	224550620R2	
D911	C-DIODE	DA2J10100	1	223303R2	N
D911 or	C-DIODE	1SS352	(1)	223234R2	
D911 or	C-DIODE	1SS355	(1)	223269R2	
D911 or	C-DIODE	MA2J111	(1)	223279R2	
D911 or	C-DIODE	KDS4148U	(1)	223283R2	
D912	C-DIODE	DA2J10100	1	223303R2	N
D912 or	C-DIODE	1SS352	(1)	223234R2	
D912 or	C-DIODE	1SS355	(1)	223269R2	
D912 or	C-DIODE	MA2J111	(1)	223279R2	
D912 or	C-DIODE	KDS4148U	(1)	223283R2	
D921	C-DIODE	DA2J10100	1	223303R2	N
D921 or	C-DIODE	1SS352	(1)	223234R2	
D921 or	C-DIODE	1SS355	(1)	223269R2	
D921 or	C-DIODE	MA2J111	(1)	223279R2	
D921 or	C-DIODE	KDS4148U	(1)	223283R2	
D922	C-DIODE	DA2J10100	1	223303R2	N
D922 or	C-DIODE	1SS352	(1)	223234R2	
D922 or	C-DIODE	1SS355	(1)	223269R2	
D922 or	C-DIODE	MA2J111	(1)	223279R2	
D922 or	C-DIODE	KDS4148U	(1)	223283R2	
D923	C-DIODE	DA2J10100	1	223303R2	N
D923 or	C-DIODE	1SS352	(1)	223234R2	
D923 or	C-DIODE	1SS355	(1)	223269R2	
D923 or	C-DIODE	MA2J111	(1)	223279R2	

D923 or	C-DIODE	KDS4148U	(1)	223283R2		
D924	C-DIODE	DA2J10100	1	223303R2	N	
D924 or	C-DIODE	1SS352	(1)	223234R2		
D924 or	C-DIODE	1SS355	(1)	223269R2		
D924 or	C-DIODE	MA2J111	(1)	223279R2		
D924 or	C-DIODE	KDS4148U	(1)	223283R2		
D925	C-DIODE	DA2J10100	1	223303R2	N	
D925 or	C-DIODE	1SS352	(1)	223234R2		
D925 or	C-DIODE	1SS355	(1)	223269R2		
D925 or	C-DIODE	MA2J111	(1)	223279R2		
D925 or	C-DIODE	KDS4148U	(1)	223283R2		
D930	C-DIODE	DA2J10100	1	223303R2	N	
D930 or	C-DIODE	1SS352	(1)	223234R2		
D930 or	C-DIODE	1SS355	(1)	223269R2		
D930 or	C-DIODE	MA2J111	(1)	223279R2		
D930 or	C-DIODE	KDS4148U	(1)	223283R2		
D931	C-DIODE	DA2J10100	1	223303R2	N	
D931 or	C-DIODE	1SS352	(1)	223234R2		
D931 or	C-DIODE	1SS355	(1)	223269R2		
D931 or	C-DIODE	MA2J111	(1)	223279R2		
D931 or	C-DIODE	KDS4148U	(1)	223283R2		
D933	C-DIODE	DA2J10100	1	223303R2	N	
D933 or	C-DIODE	1SS352	(1)	223234R2		
D933 or	C-DIODE	1SS355	(1)	223269R2		
D933 or	C-DIODE	MA2J111	(1)	223279R2		
D933 or	C-DIODE	KDS4148U	(1)	223283R2		
D934	ZENER D	DZ2J047M0L	1	224760470R2		<MDC, MDS>
D934	ZENER D	DZ2J051M0L	1	224760510R2		< MPB, MPP_A, MMK, MMQ, MPP_H>
D934 or	ZENER D	UDZS4.7B	(1)	224550470R2		<MDC, MDS>
D934 or	ZENER D	UDZS5.1B	(1)	224550510R2		< MPB, MPP_A, MMK, MMQ, MPP_H>
D935	C-DIODE	DA2J10100	1	223303R2	N	
D935 or	C-DIODE	1SS352	(1)	223234R2		
D935 or	C-DIODE	1SS355	(1)	223269R2		
D935 or	C-DIODE	MA2J111	(1)	223279R2		
D935 or	C-DIODE	KDS4148U	(1)	223283R2		
Q2001	IC	NJW1328	1	22242691R3	N	
Q2304	IC	NJM4580M-D	1	22241448R2		<MDC, MDS, MPB, MPP_A, MMK, MMQ, MPP_H>
Q2330	IC	NJM4580M-D	1	22241448R2		<MDC, MDS, MPB, MPP_A, MMK, MMQ, MPP_H>
Q2400	IC	NJM4580M-D	1	22241448R2		<MDC, MDS, MPB, MPP_A, MMK, MMQ, MPP_H>

Q7002	FL TUBE	16-BT-162GNK	1	212273		
Q7002A	HOLDER	(FL)	1	27191222C		
Q7003	IC	M66005-0001AHP	1	22242208R3		
Q7004	TR	KTC3875-GR	1	2216175R2		
Q7033	TR	KTC3875-GR	1	2216175R2		
Q9020	IC	XC6220B501PR	1	22242692R2	N	
[TRANS COIL]						
L2300	EMIFIL	BK1608LM182-T	1	230958R1		<MDC, MDS, MPB, MPP_A, MMK, MMQ, MPP_H>
L2301	EMIFIL	BK1608LM182-T	1	230958R1		<MDC, MDS, MPB, MPP_A, MMK, MMQ, MPP_H>
L2302	EMIFIL	BK1608LM182-T	1	230958R1		<MDC, MDS, MPB, MPP_A, MMK, MMQ, MPP_H>
L2303	CORE	BLM18PG181SN1D	1	2350005R1		<MDC, MDS, MPB, MPP_A, MMK, MMQ, MPP_H>
L2304	CORE	BLM18PG181SN1D	1	2350005R1		<MDC, MDS, MPB, MPP_A, MMK, MMQ, MPP_H>
L2305	EMIFIL	BK1608LM182-T	1	230958R1		<MDC, MDS, MPB, MPP_A, MMK, MMQ, MPP_H>
L2306	EMIFIL	BK1608LM182-T	1	230958R1		<MDC, MDS, MPB, MPP_A, MMK, MMQ, MPP_H>
L2307	EMIFIL	BK1608LM182-T	1	230958R1		<MDC, MDS, MPB, MPP_A, MMK, MMQ, MPP_H>
L2308	EMIFIL	BK1608LM182-T	1	230958R1		<MDC, MDS, MPB, MPP_A, MMK, MMQ, MPP_H>
L2309	EMIFIL	BK1608LM182-T	1	230958R1		<MDC, MDS, MPB, MPP_A, MMK, MMQ, MPP_H>
L2310	EMIFIL	BK1608LM182-T	1	230958R1		<MDC, MDS, MPB, MPP_A, MMK, MMQ, MPP_H>
L2311	EMIFIL	BK1608LM182-T	1	230958R1		<MDC, MDS, MPB, MPP_A, MMK, MMQ, MPP_H>
L2312	EMIFIL	BK1608LM182-T	1	230958R1		<MDC, MDS, MPB, MPP_A, MMK, MMQ, MPP_H>
L2313	EMIFIL	BK1608LM182-T	1	230958R1		<MDC, MDS, MPB, MPP_A, MMK, MMQ, MPP_H>
L2314	EMIFIL	BK1608LM182-T	1	230958R1		<MDC, MDS, MPB, MPP_A, MMK, MMQ, MPP_H>
L2315	EMIFIL	BK1608LM182-T	1	230958R1		<MDC, MDS, MPB, MPP_A, MMK, MMQ, MPP_H>
L2316	CORE	BLM18PG181SN1D	1	2350005R1		<MDC, MDS, MPB, MPP_A, MMK, MMQ, MPP_H>
L2317	EMIFIL	BK1608LM182-T	1	230958R1		<MDC, MDS, MPB, MPP_A, MMK, MMQ, MPP_H>
L2318	EMIFIL	BK1608LM182-T	1	230958R1		<MDC, MDS, MPB, MPP_A, MMK, MMQ, MPP_H>
L2319	EMIFIL	BK1608LM182-T	1	230958R1		<MDC, MDS, MPB, MPP_A, MMK, MMQ, MPP_H>
L2320	EMIFIL	BK1608LM182-T	1	230958R1		<MDC, MDS, MPB, MPP_A, MMK, MMQ, MPP_H>
L2321	EMIFIL	BK1608LM182-T	1	230958R1		<MDC, MDS, MPB, MPP_A, MMK, MMQ, MPP_H>
L7031	CHOKE COIL	LBC2518T2R2M	1	231364M022R2		
L7032	CHOKE COIL	LBC2518T2R2M	1	231364M022R2		
L7201	CHOKE COIL	LBC2518T2R2M	1	231364M022R2		
L7202	CHOKE COIL	LBC2518T2R2M	1	231364M022R2		
L7203	CHOKE COIL	LBC2518T2R2M	1	231364M022R2		
L7301	EMIFIL	BK1608LM182-T	1	230958R1		
L7302	EMIFIL	BK1608LM182-T	1	230958R1		
L9020	CORE	BLM18PG181SN1D	1	2350005R1		
T902	P TRANS	NPT-1520JQ	1	2301812A	!	<MDC, MDS>
T902	P TRANS	NPT-1520GQ	1	2301813A	!	< MPB, MPP_A, MMK, MMQ, MPP_H>

[CAPACITOR]						
C2000	C-CERA C	CK725F1E-104Z1	1	332161040R1		
C2001	C-CERA C	CK725F1E-104Z1	1	332161040R1		
C2002	VR C	CE04W50V-2.2M(VR)	1	394680227T		
C2002 or	JAMICON	CE04W50V-2.2M	(1)	398580227T	N	
C2003	VR C	CE04W6.3V-470M(VR)	1	394624717T		<MDC, MDS, MPB, MPP_A, MMK, MMQ, MPP_H>
C2003 or	JAMICON	CE04W6.3V-470M	(1)	398524717T		<MDC, MDS, MPB, MPP_A, MMK, MMQ, MPP_H>
C2004	C-CERA C	CK725F1E-104Z1	1	332161040R1		
C2005	VR C	CE04W6.3V-470M(VR)	1	394624717T		<MDC, MDS, MPB, MPP_A, MMK, MMQ, MPP_H>
C2005 or	JAMICON	CE04W6.3V-470M	(1)	398524717T		<MDC, MDS, MPB, MPP_A, MMK, MMQ, MPP_H>
C2006	C-CERA C	CC725CH1H-470J1	1	342104704R1		<MDC, MDS, MPB, MPP_A, MMK, MMQ, MPP_H>
C2007	C-CERA C	CK725F1E-104Z1	1	332161040R1		
C2008	C-CERA C	CK725F1A-105Z1	1	332181050R1		
C2009	C-CERA C	CK725F1A-105Z1	1	332181050R1		
C2010	C-CERA C	CK725F1A-105Z1	1	332181050R1		
C2011	C-CERA C	CC725CH1H-470J1	1	342104704R1		<MDC, MDS, MPB, MPP_A, MMK, MMQ, MPP_H>
C2012	C-CERA C	CK725F1A-105Z1	1	332181050R1		
C2013	VR C	CE04W50V-10M(VR)	1	394681007T		
C2013 or	JAMICON	CE04W50V-10M	(1)	398581007T	N	
C2020	C-CERA C	CK725F1A-105Z1	1	332181050R1		
C2021	C-CERA C	CK725F1A-105Z1	1	332181050R1		
C2102	VR C	CE04W6.3V-470M(VR)	1	394624717T		
C2102 or	JAMICON	CE04W6.3V-470M	(1)	398524717T	N	
C2103	VR C	CE04W50V-2.2M(VR)	1	394680227T		
C2103 or	JAMICON	CE04W50V-2.2M	(1)	398580227T	N	
C2104	VR C	CE04W50V-2.2M(VR)	1	394680227T		
C2104 or	JAMICON	CE04W50V-2.2M	(1)	398580227T	N	
C2105	VR C	CE04W6.3V-470M(VR)	1	394624717T		
C2105 or	JAMICON	CE04W6.3V-470M	(1)	398524717T	N	
C2106	VR C	CE04W50V-2.2M(VR)	1	394680227T		
C2106 or	JAMICON	CE04W50V-2.2M	(1)	398580227T	N	
C2107	VR C	CE04W50V-2.2M(VR)	1	394680227T		
C2107 or	JAMICON	CE04W50V-2.2M	(1)	398580227T	N	
C2108	VR C	CE04W6.3V-470M(VR)	1	394624717T		
C2108 or	JAMICON	CE04W6.3V-470M	(1)	398524717T	N	
C2109	VR C	CE04W6.3V-470M(VR)	1	394624717T		
C2109 or	JAMICON	CE04W6.3V-470M	(1)	398524717T	N	
C2110	VR C	CE04W6.3V-470M(VR)	1	394624717T		
C2110 or	JAMICON	CE04W6.3V-470M	(1)	398524717T	N	

C2111	VR C	CE04W50V-2.2M(VR)	1	394680227T		
C2111 or	JAMICON	CE04W50V-2.2M	(1)	398580227T	N	
C2112	VR C	CE04W50V-2.2M(VR)	1	394680227T		
C2112 or	JAMICON	CE04W50V-2.2M	(1)	398580227T	N	
C2113	VR C	CE04W50V-2.2M(VR)	1	394680227T		
C2113 or	JAMICON	CE04W50V-2.2M	(1)	398580227T	N	
C2114	VR C	CE04W50V-2.2M(VR)	1	394680227T		
C2114 or	JAMICON	CE04W50V-2.2M	(1)	398580227T	N	
C2115	VR C	CE04W50V-2.2M(VR)	1	394680227T		
C2115 or	JAMICON	CE04W50V-2.2M	(1)	398580227T	N	
C2116	VR C	CE04W50V-2.2M(VR)	1	394680227T		
C2116 or	JAMICON	CE04W50V-2.2M	(1)	398580227T	N	
C2201	C-CERA C	CK725B1H-102K1	1	332101025R1		
C2202	C-CERA C	CK725B1H-102K1	1	332101025R1		
C2203	C-CERA C	CK725B1H-103K1	1	332101035R1		
C2301	UTSP C	CE04W50V-10M(UTSP)	1	397581007T		<MDC, MDS, MPB, MPP_A, MMK, MMQ, MPP_H>
C2302	UTSP C	CE04W50V-10M(UTSP)	1	397581007T		<MDC, MDS, MPB, MPP_A, MMK, MMQ, MPP_H>
C2331	C-CERA C	CC725CH1H-331J1	1	342103314R1		<MDC, MDS, MPB, MPP_A, MMK, MMQ, MPP_H>
C2332	C-CERA C	CC725CH1H-331J1	1	342103314R1		<MDC, MDS, MPB, MPP_A, MMK, MMQ, MPP_H>
C2333	UTSP C	CE04W50V-10M(UTSP)	1	397581007T		<MDC, MDS, MPB, MPP_A, MMK, MMQ, MPP_H>
C2334	UTSP C	CE04W50V-10M(UTSP)	1	397581007T		<MDC, MDS, MPB, MPP_A, MMK, MMQ, MPP_H>
C2335	C-CERA C	CC725CH1H-471J1	1	342104714R1		<MDC, MDS, MPB, MPP_A, MMK, MMQ, MPP_H>
C2336	C-CERA C	CC725CH1H-471J1	1	342104714R1		<MDC, MDS, MPB, MPP_A, MMK, MMQ, MPP_H>
C2337	UTSP C	CE04W50V-10M(UTSP)	1	397581007T		<MDC, MDS, MPB, MPP_A, MMK, MMQ, MPP_H>
C2338	UTSP C	CE04W50V-10M(UTSP)	1	397581007T		<MDC, MDS, MPB, MPP_A, MMK, MMQ, MPP_H>
C2350	C-CERA C	CC725CH1H-471J1	1	342104714R1		<MDC, MDS, MPB, MPP_A, MMK, MMQ, MPP_H>
C2351	C-CERA C	CC725CH1H-471J1	1	342104714R1		<MDC, MDS, MPB, MPP_A, MMK, MMQ, MPP_H>
C2352	C-CERA C	CC725CH1H-470J1	1	342104704R1		<MDC, MDS, MPB, MPP_A, MMK, MMQ, MPP_H>
C2355	C-CERA C	CK725F1E-104Z1	1	332161040R1		<MDC, MDS, MPB, MPP_A, MMK, MMQ, MPP_H>
C2370	C-CERA C	CC725CH1H-101J1	1	342101014R1		<MDC, MDS, MPB, MPP_A, MMK, MMQ, MPP_H>
C2371	C-CERA C	CC725CH1H-101J1	1	342101014R1		<MDC, MDS, MPB, MPP_A, MMK, MMQ, MPP_H>
C2377	UTSP C	CE04W50V-10M(UTSP)	1	397581007T		<MDC, MDS, MPB, MPP_A, MMK, MMQ, MPP_H>
C2378	UTSP C	CE04W50V-10M(UTSP)	1	397581007T		<MDC, MDS, MPB, MPP_A, MMK, MMQ, MPP_H>
C2380	C-CERA C	CC725CH1H-101J1	1	342101014R1		<MDC, MDS, MPB, MPP_A, MMK, MMQ, MPP_H>
C2381	C-CERA C	CC725CH1H-101J1	1	342101014R1		<MDC, MDS, MPB, MPP_A, MMK, MMQ, MPP_H>
C2382	C-CERA C	CC725CH1H-101J1	1	342101014R1		<MDC, MDS, MPB, MPP_A, MMK, MMQ, MPP_H>
C2383	C-CERA C	CC725CH1H-101J1	1	342101014R1		<MDC, MDS, MPB, MPP_A, MMK, MMQ, MPP_H>
C2384	C-CERA C	CK725F1A-105Z1	1	332181050R1		<MDC, MDS, MPB, MPP_A, MMK, MMQ, MPP_H>
C2385	C-CERA C	CK725F1A-105Z1	1	332181050R1		<MDC, MDS, MPB, MPP_A, MMK, MMQ, MPP_H>

C2388	C-CERA C	CK725F1E-104Z1	1	332161040R1	<MDC, MDS, MPB, MPP_A, MMK, MMQ, MPP_H>
C2389	C-CERA C	CK725F1E-104Z1	1	332161040R1	<MDC, MDS, MPB, MPP_A, MMK, MMQ, MPP_H>
C2391	C-CERA C	CK725F1A-105Z1	1	332181050R1	<MDC, MDS, MPB, MPP_A, MMK, MMQ, MPP_H>
C2392	C-CERA C	CK725F1A-105Z1	1	332181050R1	<MDC, MDS, MPB, MPP_A, MMK, MMQ, MPP_H>
C2393	C-CERA C	CC725CH1H-471J1	1	342104714R1	<MDC, MDS, MPB, MPP_A, MMK, MMQ, MPP_H>
C2394	C-CERA C	CC725CH1H-471J1	1	342104714R1	<MDC, MDS, MPB, MPP_A, MMK, MMQ, MPP_H>
C2395	C-CERA C	CC725CH1H-471J1	1	342104714R1	<MDC, MDS, MPB, MPP_A, MMK, MMQ, MPP_H>
C2396	C-CERA C	CC725CH1H-471J1	1	342104714R1	<MDC, MDS, MPB, MPP_A, MMK, MMQ, MPP_H>
C2397	C-CERA C	CK725F1A-105Z1	1	332181050R1	<MDC, MDS, MPB, MPP_A, MMK, MMQ, MPP_H>
C2398	C-CERA C	CK725F1A-105Z1	1	332181050R1	<MDC, MDS, MPB, MPP_A, MMK, MMQ, MPP_H>
C2402	C-CERA C	CC725CH1H-471J1	1	342104714R1	<MDC, MDS, MPB, MPP_A, MMK, MMQ, MPP_H>
C2403	C-CERA C	CC725CH1H-471J1	1	342104714R1	<MDC, MDS, MPB, MPP_A, MMK, MMQ, MPP_H>
C2404	UTSP C	CE04W50V-10M(UTSP)	1	397581007T	<MDC, MDS, MPB, MPP_A, MMK, MMQ, MPP_H>
C2405	UTSP C	CE04W50V-10M(UTSP)	1	397581007T	<MDC, MDS, MPB, MPP_A, MMK, MMQ, MPP_H>
C7001	C-CERA C	CK725B1H-223K1	1	332102235R1	
C7002	C-CERA C	CK725F1E-104Z1	1	332161040R1	
C7003	C-CERA C	CC725CH1H-101J1	1	342101014R1	
C7004	C-CERA C	CC725CH1H-101J1	1	342101014R1	
C7005	C-CERA C	CC725CH1H-101J1	1	342101014R1	
C7007	C-CERA C	CC725CH1H-101J1	1	342101014R1	
C7008	ELECT C	CE04W6.3V-100M(S)	1	353721019T	
C7009	C-CERA C	CK725F1E-104Z1	1	332161040R1	
C7010	C-CERA C	CK725B1H-223K1	1	332102235R1	
C7011	C-CERA C	CK725B1H-223K1	1	332102235R1	
C7012	C-CERA C	CK725B1H-223K1	1	332102235R1	
C7014	C-CERA C	CK725B1H-223K1	1	332102235R1	
C7015	ELECT C	CE04W16V-47M(S)	1	353744709T	
C7016	C-CERA C	CK725B1H-223K1	1	332102235R1	
C7017	C-CERA C	CK725B1H-223K1	1	332102235R1	
C7021	C-CERA C	CK725B1H-103K1	1	332101035R1	
C7022	C-CERA C	CK725B1H-103K1	1	332101035R1	
C7031	C-CERA C	CK725B1H-223K1	1	332102235R1	
C7032	C-CERA C	CK725B1H-223K1	1	332102235R1	
C7033	ELECT C	CE04W16V-10M(S)	1	353741009T	
C7041	ELECT C	CE04W16V-10M(S)	1	353741009T	
C7042	C-CERA C	CC725CH1H-102J1	1	342101024R1	
C7043	C-CERA C	CC725CH1H-102J1	1	342101024R1	
C7201	C-CERA C	CC725CH1H-102J1	1	342101024R1	
C7202	C-CERA C	CK725B1H-223K1	1	332102235R1	

C7203	MKT C	B32529C0102J289	1	376491024T		
C7204	MKT C	B32529C0102J289	1	376491024T		
C7301	C-CERA C	CC725CH1H-471J1	1	342104714R1		
C7302	C-CERA C	CC725CH1H-471J1	1	342104714R1		
C7304	C-CERA C	CK725F1E-104Z1	1	332161040R1		
C7305	C-CERA C	CK725F1E-104Z1	1	332161040R1		
C7306	C-CERA C	CK725F1E-104Z1	1	332161040R1		
C7319	C-CERA C	CC725CH1H-470J1	1	342104704R1		
C901	IS C	LE103-C3.5	1	3800042S	!	
C901 or	IS C	ECQU2A103MLC	(1)	3800039S	!	
C9011	VR C	CE04W16V-10000M(VR)	1	394641037S		
C9012	TF C	ECQ-V50V-334J	1	374723344T		
C9013	VR C	CE04W50V-4.7M(VR)	1	394680477T		
C9013 or	JAMICON	CE04W50V-4.7M	(1)	398580477T	N	
C902	C-CERA C	CK725F1E-104Z1	1	332161040R1		
C9020	C-CERA C	CK732B16V-106K	1	332071065R2	N	
C9021	C-CERA C	CK732B16V-106K	1	332071065R2	N	
C9022	C-CERA C	CK732B16V-106K	1	332071065R2	N	
C9023	C-CERA C	CK732B16V-106K	1	332071065R2	N	
C9026	VR C	CE04W6.3V-470M(VR)	1	394624717T		
C9026 or	JAMICON	CE04W6.3V-470M	(1)	398524717T	N	
C9027	C-CERA C	CK725F1E-104Z1	1	332161040R1		
C9028	C-CERA C	CK725F1E-104Z1	1	332161040R1		
C9029	C-CERA C	CK725F1E-104Z1	1	332161040R1		
C9030	C-CERA C	CK725F1E-104Z1	1	332161040R1		
C9031	C-CERA C	CK725F1E-104Z1	1	332161040R1		
C911	C-CERA C	CC725CH1H-102J1	1	342101024R1		
C921	C-CERA C	CK725B1H-223K1	1	332102235R1		
C922	VR C	CE04W16V-2200M(VR)	1	394642227S		
C922 or	JAMICON	CE04W16V-2200M	(1)	398542227S		
C930	VR C	CE04W16V-470M(VR)	1	394644717T		
C930 or	JAMICON	CE04W16V-470M	(1)	398544717T		
C933	UTSP C	CE04W50V-4.7M(UTSP)	1	397580477T		
[RESISTOR]						
R2001	C-CARBON R	RN72K1J-220JE	1	435032204R1		<MDC, MDS, MPB, MPP_A, MMK, MMQ, MPP_H>
R2002	C-CARBON R	RN72K1J-220JE	1	435032204R1		<MDC, MDS, MPB, MPP_A, MMK, MMQ, MPP_H>
R2003	C-CARBON R	RN72K1J-105JE	1	435031054R1		<MDC, MDS, MPB, MPP_A, MMK, MMQ, MPP_H>
R2004	C-CARBON R	RN72K1J-563JE	1	435035634R1		
R2005	C-CARBON R	RN72K1J-103JE	1	435031034R1		

R2006	C-CARBON R	RN72K1J-103JE	1	435031034R1	
R2007	C-CARBON R	RN72K1J-563JE	1	435035634R1	
R2008	C-CARBON R	RN72K1J-222JE	1	435032224R1	
R2009	C-CARBON R	RN72K1J-222JE	1	435032224R1	
R2010	C-CARBON R	RN72K1J-183JE	1	435031834R1	
R2011	C-CARBON R	RN72K1J-183JE	1	435031834R1	
R2101	C-CARBON R	RN72K1J-750JE	1	435037504R1	
R2102	C-CARBON R	RN72K1J-750JE	1	435037504R1	
R2103	C-CARBON R	RN72K1J-750JE	1	435037504R1	
R2104	C-CARBON R	RN72K1J-750JE	1	435037504R1	
R2105	C-CARBON R	RN72K1J-750JE	1	435037504R1	
R2106	C-CARBON R	RN72K1J-750JE	1	435037504R1	
R2107	C-CARBON R	RN72K1J-750JE	1	435037504R1	
R2108	C-CARBON R	RN72K1J-750JE	1	435037504R1	
R2109	C-CARBON R	RN72K1J-750JE	1	435037504R1	
R2110	C-CARBON R	RN72K1J-750JE	1	435037504R1	
R2111	C-CARBON R	RN72K1J-750JE	1	435037504R1	
R2112	C-CARBON R	RN72K1J-750JE	1	435037504R1	
R2113	C-CARBON R	RN72K1J-750JE	1	435037504R1	
R2114	C-CARBON R	RN72K1J-750JE	1	435037504R1	
R2115	C-CARBON R	RN72K1J-750JE	1	435037504R1	
R2116	C-CARBON R	RN72K1J-750JE	1	435037504R1	
R2120	C-CARBON R	RN72K1J-104JE	1	435031044R1	
R2121	C-CARBON R	RN72K1J-104JE	1	435031044R1	
R2122	C-CARBON R	RN72K1J-104JE	1	435031044R1	
R2123	C-CARBON R	RN72K1J-104JE	1	435031044R1	
R2124	C-CARBON R	RN72K1J-104JE	1	435031044R1	
R2155	C-CARBON R	RN72K1J-000JE	1	435030004R1	
R2156	C-CARBON R	RN72K1J-000JE	1	435030004R1	
R2157	C-CARBON R	RN72K1J-000JE	1	435030004R1	
R2301	C-CARBON R	RN72K1J-224JE	1	435032244R1	<MDC, MDS, MPB, MPP_A, MMK, MMQ, MPP_H>
R2302	C-CARBON R	RN72K1J-224JE	1	435032244R1	<MDC, MDS, MPB, MPP_A, MMK, MMQ, MPP_H>
R2304	C-CARBON R	RN72K1J-123JE	1	435031234R1	<MDC, MDS, MPB, MPP_A, MMK, MMQ, MPP_H>
R2305	C-CARBON R	RN72K1J-123JE	1	435031234R1	<MDC, MDS, MPB, MPP_A, MMK, MMQ, MPP_H>
R2306	C-CARBON R	RN72K1J-223JE	1	435032234R1	<MDC, MDS, MPB, MPP_A, MMK, MMQ, MPP_H>
R2307	C-CARBON R	RN72K1J-223JE	1	435032234R1	<MDC, MDS, MPB, MPP_A, MMK, MMQ, MPP_H>
R2308	C-CARBON R	RN72K1J-123JE	1	435031234R1	<MDC, MDS, MPB, MPP_A, MMK, MMQ, MPP_H>
R2309	C-CARBON R	RN72K1J-123JE	1	435031234R1	<MDC, MDS, MPB, MPP_A, MMK, MMQ, MPP_H>
R2310	C-CARBON R	RN72K1J-223JE	1	435032234R1	<MDC, MDS, MPB, MPP_A, MMK, MMQ, MPP_H>

R2311	C-CARBON R	RN72K1J-223JE	1	435032234R1	<MDC, MDS, MPB, MPP_A, MMK, MMQ, MPP_H>
R2320	C-CARBON R	RN72K1J-471JE	1	435034714R1	<MDC, MDS, MPB, MPP_A, MMK, MMQ, MPP_H>
R2321	C-CARBON R	RN72K1J-471JE	1	435034714R1	<MDC, MDS, MPB, MPP_A, MMK, MMQ, MPP_H>
R2330	C-CARBON R	RN72K1J-105JE	1	435031054R1	<MDC, MDS, MPB, MPP_A, MMK, MMQ, MPP_H>
R2331	C-CARBON R	RN72K1J-224JE	1	435032244R1	<MDC, MDS, MPB, MPP_A, MMK, MMQ, MPP_H>
R2332	C-CARBON R	RN72K1J-224JE	1	435032244R1	<MDC, MDS, MPB, MPP_A, MMK, MMQ, MPP_H>
R2333	C-CARBON R	RN72K1J-222JE	1	435032224R1	<MDC, MDS, MPB, MPP_A, MMK, MMQ, MPP_H>
R2334	C-CARBON R	RN72K1J-222JE	1	435032224R1	<MDC, MDS, MPB, MPP_A, MMK, MMQ, MPP_H>
R2337	C-CARBON R	RN72K1J-224JE	1	435032244R1	<MDC, MDS, MPB, MPP_A, MMK, MMQ, MPP_H>
R2338	C-CARBON R	RN72K1J-224JE	1	435032244R1	<MDC, MDS, MPB, MPP_A, MMK, MMQ, MPP_H>
R2348	C-CARBON R	RN72K1J-000JE	1	435030004R1	<MDC, MDS, MPB, MPP_A, MMK, MMQ, MPP_H>
R2349	C-CARBON R	RN72K1J-000JE	1	435030004R1	<MDC, MDS, MPB, MPP_A, MMK, MMQ, MPP_H>
R2352	C-CARBON R	RN72K1J-750JE	1	435037504R1	<MDC, MDS, MPB, MPP_A, MMK, MMQ, MPP_H>
R2360	C-CARBON R	RN72K1J-103JE	1	435031034R1	<MDC, MDS, MPB, MPP_A, MMK, MMQ, MPP_H>
R2361	C-CARBON R	RN72K1J-103JE	1	435031034R1	<MDC, MDS, MPB, MPP_A, MMK, MMQ, MPP_H>
R2363	C-CARBON R	RN72K1J-103JE	1	435031034R1	<MDC, MDS, MPB, MPP_A, MMK, MMQ, MPP_H>
R2364	C-CARBON R	RN72K1J-103JE	1	435031034R1	<MDC, MDS, MPB, MPP_A, MMK, MMQ, MPP_H>
R2400	C-CARBON R	RN72K1J-222JE	1	435032224R1	<MDC, MDS, MPB, MPP_A, MMK, MMQ, MPP_H>
R2401	C-CARBON R	RN72K1J-222JE	1	435032224R1	<MDC, MDS, MPB, MPP_A, MMK, MMQ, MPP_H>
R2402	C-CARBON R	RN72K1J-222JE	1	435032224R1	<MDC, MDS, MPB, MPP_A, MMK, MMQ, MPP_H>
R2403	C-CARBON R	RN72K1J-222JE	1	435032224R1	<MDC, MDS, MPB, MPP_A, MMK, MMQ, MPP_H>
R2602	C-CARBON R	RN72K1J-000JE	1	435030004R1	<MDC, MDS, MPB, MPP_A, MMK, MMQ, MPP_H>
R2603	C-CARBON R	RN72K1J-000JE	1	435030004R1	<MDC, MDS, MPB, MPP_A, MMK, MMQ, MPP_H>
R2604	C-CARBON R	RN72K1J-000JE	1	435030004R1	<MDC, MDS, MPB, MPP_A, MMK, MMQ, MPP_H>
R7001	C-CARBON R	RN72K1J-103JE	1	435031034R1	
R7002	C-CARBON R	RN72K1J-332JE	1	435033324R1	
R7003	C-CARBON R	RN72K1J-332JE	1	435033324R1	
R7004	C-CARBON R	RN72K1J-221JE	1	435032214R1	
R7005	C-CARBON R	RN72K1J-221JE	1	435032214R1	
R7006	C-CARBON R	RN72K1J-103JE	1	435031034R1	
R7007	C-CARBON R	RN72K1J-221JE	1	435032214R1	
R7008	C-CARBON R	RN72K1J-221JE	1	435032214R1	
R7021	C-CARBON R	RN72K1J-103JE	1	435031034R1	
R7022	C-CARBON R	RN72K1J-103JE	1	435031034R1	
R7023	C-CARBON R	RN72K1J-103JE	1	435031034R1	
R7024	C-CARBON R	RN72K1J-103JE	1	435031034R1	
R7033	C-CARBON R	RN72K1J-820JE	1	435038204R1	
R7041	C-CARBON R	RN72K1J-101JE	1	435031014R1	
R7042	C-CARBON R	RN72K1J-102JE	1	435031024R1	

R7101	C-CARBON R	RN72K1J-271JE	1	435032714R1		
R7102	C-CARBON R	RN72K1J-331JE	1	435033314R1		
R7103	C-CARBON R	RN72K1J-471JE	1	435034714R1		
R7106	C-CARBON R	RN72K1J-271JE	1	435032714R1		
R7107	C-CARBON R	RN72K1J-331JE	1	435033314R1		
R7108	C-CARBON R	RN72K1J-471JE	1	435034714R1		
R7109	C-CARBON R	RN72K1J-561JE	1	435035614R1		
R7110	C-CARBON R	RN72K1J-821JE	1	435038214R1		
R7111	C-CARBON R	RN72K1J-122JE	1	435031224R1		
R7112	C-CARBON R	RN72K1J-222JE	1	435032224R1		
R7113	C-CARBON R	RN72K1J-392JE	1	435033924R1		
R7114	C-CARBON R	RN72K1J-123JE	1	435031234R1		
R7115	C-CARBON R	RN72K1J-271JE	1	435032714R1		
R7116	C-CARBON R	RN72K1J-331JE	1	435033314R1		
R7117	C-CARBON R	RN72K1J-471JE	1	435034714R1		
R7118	C-CARBON R	RN72K1J-561JE	1	435035614R1		
R7119	C-CARBON R	RN72K1J-821JE	1	435038214R1		
R7120	C-CARBON R	RN72K1J-122JE	1	435031224R1		
R7121	C-CARBON R	RN72K1J-222JE	1	435032224R1		
R7122	C-CARBON R	RN72K1J-392JE	1	435033924R1		
R7123	C-CARBON R	RN72K1J-271JE	1	435032714R1		
R7124	C-CARBON R	RN72K1J-331JE	1	435033314R1		
R7125	C-CARBON R	RN72K1J-471JE	1	435034714R1		
R7126	C-CARBON R	RN72K1J-561JE	1	435035614R1		
R7127	C-CARBON R	RN72K1J-821JE	1	435038214R1		
R7128	C-CARBON R	RN72K1J-122JE	1	435031224R1		
R7129	C-CARBON R	RN72K1J-222JE	1	435032224R1		
R7152	C-CARBON R	RN72K1J-222JE	1	435032224R1		
R7301	C-CARBON R	RN72K1J-331JE	1	435033314R1		
R7302	C-CARBON R	RN72K1J-331JE	1	435033314R1		
R9014	C-CARBON R	RN72K1J-104JE	1	435031044R1		
R9030	THERMISTOR	FUSB090F	1	4000252T		<MDC, MDS, MPB, MPP_A, MMK, MMQ, MPP_H>
R921	METAL O R	RS1/2WBJ-47	1	443524704T		
R922	C-CARBON R	RN72K1J-823JE	1	435038234R1		<MDC, MDS>
R934	C-CARBON R	RN72K1J-104JE	1	435031044R1		
[SW TRM]						
E7201	TRM-423(SCREW)	NEJITANSI ST3	1	25060495		
E7301A	RETAINER	(GND)	1	27142222A	N	
E9004	RETAINER	(JOINT)	1	27142069		

E901	TRM-423(SCREW)	NEJITANSI ST3	1	25060495		
E902	TRM-423(SCREW)	NEJITANSI ST3	1	25060495		
F9001	FUSE	5A-UL-125V	1	252385T		
F901C	FUSE HOL	NSCT-1P2031	1	25052133T		
F901D	FUSE HOL	NSCT-1P2031	1	25052133T		
F901E	LABEL	T4AL250V	1	29361732A		< MPB, MPP_A, MMK, MMQ, MPP_H>
JL502B	WIRE TRAP	NPLG-5P588	1	25055626		<MDC, MDS, MPB, MPP_A, MMK, MMQ, MPP_H>
JL503B	WIRE TRAP	NPLG-7P590	1	25055628		<MDC, MDS, MPB, MPP_A, MMK, MMQ, MPP_H>
JL605A	WIRE HOL	NSCT-5P896	1	25051109		
JL702A	WIRE HOL	NSCT-7P878	1	25051091		
JL702B	WIRE HOL	NSCT-7P878	1	25051091		
JL801A	WIRE HOL	NSCT-5P876	1	25051089		
JL901A	WIRE HOL	NSCT-5P876	1	25051089		
JL952B	SOCKET	NSCT-3P95	1	25050267		
JL953A	WIRE HOL	NSCT-5P876	1	25051089		
P2001A	SOCKET	NSCT-7P2398	1	25052501		<MDC, MDS, MPB, MPP_A, MMK, MMQ, MPP_H>
P2081	SOCKET	NNA1-01-006	1	25053357		<MDC, MDS, MPB, MPP_A, MMK, MMQ, MPP_H>
P2201	PIN JACK	NPJ-3PDYYY560	1	25045778		
P2202	PIN JACK	NPJ-3PDYYY560	1	25045778		
P2203	PIN JACK	NPJ-9PDGLRGLRGLR563	1	25045781		
P2800A	SOCKET	NSCT-9P2400	1	25052503		
P701B	SOCKET	NSCT-23P2441	1	25052544		
P703A	SOCKET	NSCT-7P2425	1	25052528		
P7201	ST JACK	MSJ-064-05A SR	1	25045783		
P7201 or	ST JACK	YKB21-5005	(1)	25045724		
P7301	PIN JACK	NPJ-3PDB720	1	25045957		
P901A	PLUG	NPLG-2P631	1	25055675	!	
P901Aor	PLUG	1-1123724-2	(1)	25056402	!	
P911	PLUG	NPLG-2P631	1	25055675	!	
P911 or	PLUG	1-1123724-2	(1)	25056402	!	
RL901	RELAY	NRL-1P5A-DC9-179	1	25065669	!	
RL901 or	RELAY	NRL-1P10A-DC9-188	(1)	25065693	!	
S7002	R ENCODE	EC12E2425WITH WASHER	1	25065655W		
S7102	PUSH SW	NPS-111-S681	1	25035718T		
S7104	PUSH SW	NPS-111-S681	1	25035718T		
S7106	PUSH SW	NPS-111-S681	1	25035718T		
S7108	PUSH SW	NPS-111-S681	1	25035718T		
S7113	PUSH SW	NPS-111-S681	1	25035718T		
S7115	PUSH SW	NPS-111-S681	1	25035718T		

S7117	PUSH SW	NPS-111-S681	1	25035718T	
S7119	PUSH SW	NPS-111-S681	1	25035718T	
S7121	PUSH SW	NPS-111-S681	1	25035718T	
S7123	PUSH SW	NPS-111-S681	1	25035718T	
S7125	PUSH SW	NPS-111-S681	1	25035718T	
S7127	PUSH SW	NPS-111-S681	1	25035718T	
S7129	PUSH SW	NPS-111-S681	1	25035718T	
S7132	PUSH SW	NPS-111-S681	1	25035718T	
S7134	PUSH SW	NPS-111-S681	1	25035718T	
S7136	PUSH SW	NPS-111-S681	1	25035718T	
S7138	PUSH SW	NPS-111-S681	1	25035718T	
S7140	PUSH SW	NPS-111-S681	1	25035718T	
S7142	PUSH SW	NPS-111-S681	1	25035718T	
S7144	PUSH SW	NPS-111-S681	1	25035718T	
S7146	PUSH SW	NPS-111-S681	1	25035718T	
S7148	PUSH SW	NPS-111-S681	1	25035718T	
S7150	PUSH SW	NPS-111-S681	1	25035718T	
S7152	PUSH SW	NPS-111-S681	1	25035718T	
S7154	PUSH SW	NPS-111-S681	1	25035718T	
S7156	PUSH SW	NPS-111-S681	1	25035718T	
S7158	PUSH SW	NPS-111-S681	1	25035718T	
S7160	PUSH SW	NPS-111-S681	1	25035718T	
S7162	PUSH SW	NPS-111-S681	1	25035718T	
S7164	PUSH SW	NPS-111-S681	1	25035718T	
[TUNER UNIT]					
U7041	REMO SENS	KSM-603TE5B	1	24130019	

U003 **U0030 x 2 pcs.**

U0030 HDMI PC board BAHDM-0678-1C/ 1D/ 1E

CIRCUIT NO.	PART NAME	DESCRIPTION	Q'TY	PART NO. (SN)	REMARKS
[SEMI CONDUCTOR]					
D110	C-DIODE	DA2J10100	1	223303R2	N
D110 or	C-DIODE	1SS352	(1)	223234R2	
D110 or	C-DIODE	1SS355	(1)	223269R2	
D110 or	C-DIODE	MA2J111	(1)	223279R2	
D110 or	C-DIODE	KDS4148U	(1)	223283R2	
D111	C-DIODE	DA2J10100	1	223303R2	N
D111 or	C-DIODE	1SS352	(1)	223234R2	

D111 or	C-DIODE	1SS355	(1)	223269R2	
D111 or	C-DIODE	MA2J111	(1)	223279R2	
D111 or	C-DIODE	KDS4148U	(1)	223283R2	
D182	C-DIODE	DA2J10100	1	223303R2	N
D182 or	C-DIODE	1SS352	(1)	223234R2	
D182 or	C-DIODE	1SS355	(1)	223269R2	
D182 or	C-DIODE	MA2J111	(1)	223279R2	
D182 or	C-DIODE	KDS4148U	(1)	223283R2	
D183	C-DIODE	DA2J10100	1	223303R2	N
D183 or	C-DIODE	1SS352	(1)	223234R2	
D183 or	C-DIODE	1SS355	(1)	223269R2	
D183 or	C-DIODE	MA2J111	(1)	223279R2	
D183 or	C-DIODE	KDS4148U	(1)	223283R2	
D601	C-DIODE	DA2J10100	1	223303R2	N
D601 or	C-DIODE	1SS352	(1)	223234R2	
D601 or	C-DIODE	1SS355	(1)	223269R2	
D601 or	C-DIODE	MA2J111	(1)	223279R2	
D601 or	C-DIODE	KDS4148U	(1)	223283R2	
D602	C-DIODE	DA2J10100	1	223303R2	N
D602 or	C-DIODE	1SS352	(1)	223234R2	
D602 or	C-DIODE	1SS355	(1)	223269R2	
D602 or	C-DIODE	MA2J111	(1)	223279R2	
D602 or	C-DIODE	KDS4148U	(1)	223283R2	
D603	C-DIODE	DA2J10100	1	223303R2	N
D603 or	C-DIODE	1SS352	(1)	223234R2	
D603 or	C-DIODE	1SS355	(1)	223269R2	
D603 or	C-DIODE	MA2J111	(1)	223279R2	
D603 or	C-DIODE	KDS4148U	(1)	223283R2	
D701	C-DIODE	DA2J10100	1	223303R2	N
D701 or	C-DIODE	1SS352	(1)	223234R2	
D701 or	C-DIODE	1SS355	(1)	223269R2	
D701 or	C-DIODE	MA2J111	(1)	223279R2	
D701 or	C-DIODE	KDS4148U	(1)	223283R2	
D702	C-DIODE	DA2J10100	1	223303R2	N
D702 or	C-DIODE	1SS352	(1)	223234R2	
D702 or	C-DIODE	1SS355	(1)	223269R2	
D702 or	C-DIODE	MA2J111	(1)	223279R2	
D702 or	C-DIODE	KDS4148U	(1)	223283R2	
D8100	C-DIODE	DA2J10100	1	223303R2	N

D8100 or	C-DIODE	1SS352	(1)	223234R2	
D8100 or	C-DIODE	1SS355	(1)	223269R2	
D8100 or	C-DIODE	MA2J111	(1)	223279R2	
D8100 or	C-DIODE	KDS4148U	(1)	223283R2	
D8145	ESD D	AOZ8804ADI	1	225502R2	
D8146	ESD D	AOZ8804ADI	1	225502R2	
D8931	DIODE	RB050M-30	1	22380367R2	
D8951	DIODE	RB050M-30	1	22380367R2	
D8971	DIODE	RB050M-30	1	22380367R2	
Q153	IC	R1EX25064ASA00A	1	22242581R2	
Q181	TR	KRC105S	1	2217290R2	
Q181 or	TR	RN1405	(1)	2214500R2	
Q201	IC	D808K013BPTP	1	22242693R3	N
Q271	IC	XC6220B121PR	1	22242626R2	
Q272	IC	BU33TD3WG-TR	1	22242715R2	
Q273	IC	XC6220B501PR	1	22242692R2	N
Q281	IC	K4S641632N-LC60	1	22242603R2	
Q281 or	IC	EM638165TS-7G	(1)	22242607R2	
Q282	IC (DSP)	W25Q16CVSSIG(0406)	1	222W0118R204066	
Q301	IC	PCM9211PTR	1	22242703R2	
Q351	IC	PCM1681PWPR	1	22242697R2	N
Q601	TR	KRC104S	1	2216210R2	
Q601 or	TR	RN1404	(1)	2214490R2	
Q701	IC (MAIN MICROPROCESSOR)	MPD70F3746GJ-GAE-AX(0459)	1	222W0079R304590	
Q702	IC	S-812C33AUA-C2N	1	22242222R2	
Q703	IC	S-812C56AUA-C3K	1	22242207R2	
Q704	IC	SN74CB3Q3305PWR	1	22242258R2	
Q746	IC	BU33TD3WG-TR	1	22242715R2	
Q751	TR	KRC104S	1	2216210R2	
Q751 or	TR	RN1404	(1)	2214490R2	
Q752	TR	KRA102S	1	2216220R2	
Q752 or	TR	RN2402	(1)	2214530R2	
Q753	TR	KRA107S	1	2216350R2	
Q753 or	TR	RN2407(TE85L_F)	(1)	2216360R2	
Q754	TR	KRC102S	1	2216190R2	
Q754 or	TR	RN1402	(1)	2214470R2	
Q755	TR	KRA107S	1	2216350R2	
Q755 or	TR	RN2407(TE85L_F)	(1)	2216360R2	
Q756	TR	KRC102S	1	2216190R2	

Q756 or	TR	RN1402	(1)	2214470R2		
Q8101	IC	ADV7623	1	22242625R3		
Q8104	IC	MM3404A50NRE	1	22242701R2	N	
Q8105	IC (HDMI/VIDEO MICROPROCESSOR)	W25Q16CVSSIG(0407)	1	222W0118R204075		
Q8111	TR	KRC101S	1	2216330R2		
Q8111 or	TR	RN1401(TE85L_F)	(1)	2214460R2		
Q8112	TR	KRC101S	1	2216330R2		
Q8112 or	TR	RN1401(TE85L_F)	(1)	2214460R2		
Q8113	TR	KRC101S	1	2216330R2		
Q8113 or	TR	RN1401(TE85L_F)	(1)	2214460R2		
Q8114	TR	KRC101S	1	2216330R2		
Q8114 or	TR	RN1401(TE85L_F)	(1)	2214460R2		
Q8115	TR	KRC101S	1	2216330R2		
Q8115 or	TR	RN1401(TE85L_F)	(1)	2214460R2		
Q8116	TR	KRC101S	1	2216330R2		
Q8116 or	TR	RN1401(TE85L_F)	(1)	2214460R2		
Q8117	TR	KRC101S	1	2216330R2		<MDC, MDS, MMK, MMQ, MPB, MPP_A, MPP_H>
Q8117 or	TR	RN1401(TE85L_F)	(1)	2214460R2		<MDC, MDS, MMK, MMQ, MPB, MPP_A, MPP_H>
Q8118	TR	KRC101S	1	2216330R2		<MDC, MDS, MMK, MMQ, MPB, MPP_A, MPP_H>
Q8118 or	TR	RN1401(TE85L_F)	(1)	2214460R2		<MDC, MDS, MMK, MMQ, MPB, MPP_A, MPP_H>
Q8156	TR ARRAY	UM6K1N	1	226066R2		
Q8931	IC	MP2363DN-LF-Z	1	22242627R2		
Q8951	IC	MP2363DN-LF-Z	1	22242627R2		
Q8971	IC	MP2363DN-LF-Z	1	22242627R2		
Q8972	IC	BU18TD3WG-TR	1	22242716R2		
[TRANS COIL]						
L153	CORE	BLM18PG181SN1D	1	2350005R1		
L201	C-CARBON R	RN72K1J-000JE	1	435030004R1		
L251	CORE	BLM18PG121SN1D	1	2350006R1		<MDC, MDS, MMK, MMQ, MPB, MPP_A, MPP_H>
L252	CORE	BLM18PG121SN1D	1	2350006R1		<MDC, MDS, MMK, MMQ, MPB, MPP_A, MPP_H>
L253	CORE	BLM18PG121SN1D	1	2350006R1		
L254	CORE	BLM18PG181SN1D	1	2350005R1		
L255	CORE	BLM18PG121SN1D	1	2350006R1		
L281	CORE	BLM18PG181SN1D	1	2350005R1		
L301	EMIFIL	BK1608LM182-T	1	230958R1		
L302	EMIFIL	BK1608LL241-T	1	230959R1		
L303	CHOKE COIL	LBC2518T4R7M	1	231364M047R2		
L304	CHOKE COIL	LBC2518T4R7M	1	231364M047R2		
L305	CHOKE COIL	LBC2518T4R7M	1	231364M047R2		

L351	CHOKE COIL	LBC2518T4R7M	1	231364M047R2	
L352	CHOKE COIL	LBC2518T4R7M	1	231364M047R2	
L500	CORE	BLM18PG181SN1D	1	2350005R1	
L740	CORE	BLM18PG181SN1D	1	2350005R1	
L742	CORE	BLM18PG181SN1D	1	2350005R1	
L743	CORE	BLM18PG181SN1D	1	2350005R1	
L744	CORE	BLM18PG181SN1D	1	2350005R1	
L746	CORE	BLM18PG181SN1D	1	2350005R1	
L8101	EMIFIL	BK1608LM182-T	1	230958R1	
L8911	CORE	BLM18PG181SN1D	1	2350005R1	
L8912	CORE	BLM18PG181SN1D	1	2350005R1	
L8921	CORE	BLM18PG181SN1D	1	2350005R1	
L8922	CORE	BLM18PG181SN1D	1	2350005R1	
L8923	CORE	BLM18PG181SN1D	1	2350005R1	
L8931	CHOKE COIL	CDRH8D43_100	1	231371P100R2	
L8931 or	CHOKE COIL	0182-7E08Q-100M-RA	(1)	231396M100R2	
L8931 or	CHOKE COIL	SWRH8D43C-100MT	(1)	231445M100R2	N
L8932	CORE	BLM18PG181SN1D	1	2350005R1	
L8933	CORE	BLM18PG181SN1D	1	2350005R1	
L8934	CORE	BLM18PG181SN1D	1	2350005R1	
L8937	CORE	BLM18PG181SN1D	1	2350005R1	
L8938	CORE	BLM18PG181SN1D	1	2350005R1	
L8939	CORE	BLM18PG181SN1D	1	2350005R1	
L8951	CHOKE COIL	CDRH8D43_100	1	231371P100R2	
L8951 or	CHOKE COIL	0182-7E08Q-100M-RA	(1)	231396M100R2	
L8951 or	CHOKE COIL	SWRH8D43C-100MT	(1)	231445M100R2	N
L8952	CORE	BLM18PG181SN1D	1	2350005R1	
L8953	CORE	BLM18PG181SN1D	1	2350005R1	
L8954	CORE	BLM18PG181SN1D	1	2350005R1	
L8971	CHOKE COIL	CDRH8D43_100	1	231371P100R2	
L8971 or	CHOKE COIL	0182-7E08Q-100M-RA	(1)	231396M100R2	
L8971 or	CHOKE COIL	SWRH8D43C-100MT	(1)	231445M100R2	N
L8972	CORE	BLM18PG181SN1D	1	2350005R1	
L8973	CORE	BLM18PG181SN1D	1	2350005R1	
L8974	CORE	BLM18PG181SN1D	1	2350005R1	
X201	CRYSTAL	HC-49SMD24.000MHz	1	3010479R2	
X301	CRYSTAL	HC-49SMD24.576MHz+/-50ppm	1	3010494R2	
X501	CERA LOCK	CSTCR5M00G53-B0	1	3010356R2	
X8100	CRYSTAL	HC-49USSMD28.6363MHz	1	3010491R2	

[CAPACITOR]					
C151	C-CERA C	CK725B1C-104K0	1	332011045R1	
C201	C-CERA C	CK725B1A-105K0	1	332001055R1	
C202	C-CERA C	CK725B1A-105K0	1	332001055R1	
C203	C-CERA C	CK725B1A-105K0	1	332001055R1	
C204	C-CERA C	CK725B1A-105K0	1	332001055R1	
C205	C-CERA C	CK725B1A-105K0	1	332001055R1	
C206	C-CERA C	CK725B1A-105K0	1	332001055R1	
C207	C-CERA C	CK725B1A-105K0	1	332001055R1	
C208	C-CERA C	CK725B1A-105K0	1	332001055R1	
C209	C-CERA C	CK725B1A-105K0	1	332001055R1	
C210	C-CERA C	CK725B1A-105K0	1	332001055R1	
C211	C-CERA C	CK725B1A-105K0	1	332001055R1	
C212	C-CERA C	CK725B1A-105K0	1	332001055R1	
C213	C-CERA C	CK725B1A-105K0	1	332001055R1	
C214	C-CERA C	CK725B1A-105K0	1	332001055R1	
C215	C-CERA C	CK725B1A-105K0	1	332001055R1	
C216	C-CERA C	CK725B1A-105K0	1	332001055R1	
C217	C-CERA C	CK725B1A-105K0	1	332001055R1	
C218	C-CERA C	CK725B1A-105K0	1	332001055R1	
C219	C-CERA C	CK725B1A-105K0	1	332001055R1	
C221	C-CERA C	CK725B1A-105K0	1	332001055R1	
C222	C-CERA C	CK725B1A-105K0	1	332001055R1	
C223	C-CERA C	CK725B1A-105K0	1	332001055R1	
C224	C-CERA C	CK725B1A-105K0	1	332001055R1	
C225	C-CERA C	CK725B1A-105K0	1	332001055R1	
C226	C-CERA C	CK725B1A-105K0	1	332001055R1	
C227	C-CERA C	CK725B1A-105K0	1	332001055R1	
C228	C-CERA C	CK725B1A-105K0	1	332001055R1	
C229	C-CERA C	CK725B1A-105K0	1	332001055R1	
C230	C-CERA C	CK725B1A-105K0	1	332001055R1	
C231	C-CERA C	CK725B1A-105K0	1	332001055R1	
C232	C-CERA C	CK725B1A-105K0	1	332001055R1	
C233	C-CERA C	CK725B1A-105K0	1	332001055R1	
C234	C-CERA C	CK725B1A-105K0	1	332001055R1	
C235	C-CERA C	CK725B1A-105K0	1	332001055R1	
C236	C-CERA C	CK725B1A-105K0	1	332001055R1	
C237	C-CERA C	CK725B1A-105K0	1	332001055R1	
C238	C-CERA C	CK725B1A-105K0	1	332001055R1	

C239	C-CERA C	CK725B1A-105K0	1	332001055R1		
C240	C-CERA C	CK725B1A-105K0	1	332001055R1		
C241	C-CERA C	CK725B1A-105K0	1	332001055R1		
C242	C-CERA C	CK725B1A-105K0	1	332001055R1		
C251	C-CERA C	CK732B16V-106K	1	332071065R2		<MDC, MDS, MMK, MMQ, MPB, MPP_A, MPP_H>
C252	C-CERA C	CK732B16V-106K	1	332071065R2	N	
C253	C-CERA C	CK732B16V-106K	1	332071065R2	N	
C254	C-CERA C	CK732B16V-106K	1	332071065R2	N	
C255	C-CERA C	CK732B16V-106K	1	332071065R2	N	
C256	C-CERA C	CK725B1A-105K0	1	332001055R1		
C261	C-CERA C	CK725B1A-224K0	1	332002245R1		
C262	C-CERA C	CK725B1C-104K0	1	332011045R1		<MDC, MDS, MMK, MMQ, MPB, MPP_A, MPP_H>
C263	C-CERA C	CK725B1C-103K0	1	332011035R1		
C264	C-CERA C	CK725B1A-105K0	1	332001055R1		
C265	C-CERA C	CC725CH1H-120J0	1	342031204R1	N	
C266	C-CERA C	CC725CH1H-120J0	1	342031204R1	N	
C267	C-CERA C	CK725B1H-102K0	1	332031025R1		
C268	C-CERA C	CK725B1A-105K0	1	332001055R1		
C269	C-CERA C	CK725B1A-105K0	1	332001055R1		
C270	C-CERA C	CK732B16V-106K	1	332071065R2	N	
C271	C-CERA C	CK732B16V-106K	1	332071065R2	N	
C272	C-CERA C	CK732B16V-106K	1	332071065R2	N	
C273	C-CERA C	CK732B16V-106K	1	332071065R2	N	
C282	C-CERA C	CK732B16V-106K	1	332071065R2	N	
C283	C-CERA C	CK725B1A-105K0	1	332001055R1		
C284	C-CERA C	CK725B1A-105K0	1	332001055R1		
C285	C-CERA C	CK725B1A-105K0	1	332001055R1		
C286	C-CERA C	CK725B1A-105K0	1	332001055R1		
C287	C-CERA C	CK725B1A-105K0	1	332001055R1		
C288	C-CERA C	CK725B1A-105K0	1	332001055R1		
C289	C-CERA C	CK725B1A-105K0	1	332001055R1		
C290	C-CERA C	CK725B1A-105K0	1	332001055R1		
C293	C-CERA C	CK725B1H-102K0	1	332031025R1		
C294	C-CERA C	CK725B1H-102K0	1	332031025R1		
C295	C-CERA C	CK725B1H-102K0	1	332031025R1		
C296	C-CERA C	CK725B1H-102K0	1	332031025R1		
C301	C-CERA C	CC725CH1H-180J0	1	342031804R1		
C302	C-CERA C	CC725CH1H-180J0	1	342031804R1		
C305	C-CERA C	CK725B1C-104K0	1	332011045R1		

C306	CHIP ELECT C	CEWX4V-220M	1	3981G2217R2		
C307	C-CERA C	CK725B1C-104K0	1	332011045R1		
C3117	C-CERA C	CK725B1H-102K0	1	332031025R1		
C312	C-CERA C	CC725CH1H-221J0	1	342032214R1	N	
C313	C-CERA C	CK725B1C-104K0	1	332011045R1		
C314	CHIP ELECT C	CEWX4V-220M	1	3981G2217R2		
C315	C-CERA C	CK725B1H-472K0	1	332034725R1		
C316	C-CERA C	CK725B1C-473K0	1	332014735R1	N	
C317	C-CERA C	CK725B1C-104K0	1	332011045R1		
C318	CHIP ELECT C	CEWX10V-220M	1	398132217R2		
C319	CHIP ELECT C	CEWX16V-47M	1	398144707R2		
C320	C-CERA C	CK725B1E-223K0	1	332022235R1	N	
C351	CHIP ELECT C	CEWX4V-220M	1	3981G2217R2		
C352	C-CERA C	CK725B1C-104K0	1	332011045R1		
C353	CHIP ELECT C	CEWX10V-220M	1	398132217R2		
C354	C-CERA C	CK725B1C-104K0	1	332011045R1		
C355	C-CERA C	CK725B1C-104K0	1	332011045R1		
C356	CHIP ELECT C	CEWX16V-47M	1	398144707R2		
C365	CHIP ELECT C	CEWX50V-10M	1	398181007R2		
C366	CHIP ELECT C	CEWX50V-10M	1	398181007R2		
C367	CHIP ELECT C	CEWX50V-10M	1	398181007R2		
C368	CHIP ELECT C	CEWX50V-10M	1	398181007R2		
C369	CHIP ELECT C	CEWX50V-10M	1	398181007R2		
C370	CHIP ELECT C	CEWX50V-10M	1	398181007R2		
C501	C-CERA C	CK732B16V-106K	1	332071065R2	N	
C502	C-CERA C	CK725B1C-104K0	1	332011045R1		
C503	C-CERA C	CK725B1C-104K0	1	332011045R1		
C504	C-CERA C	CK725B1C-104K0	1	332011045R1		
C505	C-CERA C	CK725B1C-104K0	1	332011045R1		
C507	C-CERA C	CK725B1C-104K0	1	332011045R1		
C508	C-CERA C	CK725B1C-104K0	1	332011045R1		
C509	C-CERA C	CK732B16V-106K	1	332071065R2	N	
C511	C-CERA C	CK725B1H-102K0	1	332031025R1		
C512	C-CERA C	CK725B1H-102K0	1	332031025R1		
C513	C-CERA C	CC725CH1H-101J0	1	342031014R1		<MDC, MDS, MMK, MMQ, MPB, MPP_A, MPP_H>
C514	C-CERA C	CK725B1C-104K0	1	332011045R1		
C515	C-CERA C	CK725B1C-104K0	1	332011045R1		
C516	C-CERA C	CK725B1C-104K0	1	332011045R1		
C517	C-CERA C	CK725B1C-104K0	1	332011045R1		

C518	C-CERA C	CK725B1H-102K0	1	332031025R1		
C519	C-CERA C	CK725B1H-102K0	1	332031025R1		
C520	C-CERA C	CK725B1H-102K0	1	332031025R1		
C521	C-CERA C	CK725B1H-102K0	1	332031025R1		<MDC, MDS, MMK, MMQ, MPB, MPP_A, MPP_H>
C522	C-CERA C	CK725B1C-104K0	1	332011045R1		
C523	C-CERA C	CK725B1H-102K0	1	332031025R1		
C524	C-CERA C	CK725B1H-102K0	1	332031025R1		
C525	C-CERA C	CK725B1C-104K0	1	332011045R1		
C526	C-CERA C	CK725B1H-102K0	1	332031025R1		
C527	C-CERA C	CK725B1H-102K0	1	332031025R1		
C528	C-CERA C	CK725B1C-104K0	1	332011045R1		
C613	C-CERA C	CK732B1C-474K	1	337394745R1		
C701	C-CERA C	CK732B16V-106K	1	332071065R2	N	
C702	C-CERA C	CK732B16V-106K	1	332071065R2	N	
C703	C-CERA C	CK732B16V-106K	1	332071065R2	N	
C705	C-CERA C	CK732B16V-106K	1	332071065R2	N	
C706	C-CERA C	CK725B1E-106K	1	332221065R2		
C707	C-CERA C	CK732B16V-106K	1	332071065R2	N	
C708	C-CERA C	CK732B16V-106K	1	332071065R2	N	
C709	C-CERA C	CK725B1E-106K	1	332221065R2		
C710	C-CERA C	CK725B1C-104K0	1	332011045R1		
C745	C-CERA C	CK732B16V-106K	1	332071065R2	N	
C751	C-CERA C	CK725B1A-105K0	1	332001055R1		
C753	CHIP ELECT C	CEWT6.3V-470M	1	395724717R2		
C8100	C-CERA C	CK725B1H-102K0	1	332031025R1		<MDC, MDS, MMK, MMQ, MPB, MPP_A, MPP_H>
C8103	C-CERA C	CK725B1C-104K0	1	332011045R1		
C8104	C-CERA C	CK725B1H-102K0	1	332031025R1		
C8105	C-CERA C	CK725B1C-104K0	1	332011045R1		
C8106	C-CERA C	CK725B1H-102K0	1	332031025R1		
C8107	C-CERA C	CK725B1C-104K0	1	332011045R1		
C8108	C-CERA C	CK725B1H-102K0	1	332031025R1		
C8109	C-CERA C	CK725B1C-104K0	1	332011045R1		
C8110	C-CERA C	CK725B1H-102K0	1	332031025R1		
C8111	C-CERA C	CK725B1C-104K0	1	332011045R1		
C8112	C-CERA C	CK725B1H-102K0	1	332031025R1		
C8113	C-CERA C	CK725B1C-104K0	1	332011045R1		
C8114	C-CERA C	CK725B1H-102K0	1	332031025R1		
C8115	C-CERA C	CK725B1C-104K0	1	332011045R1		
C8116	C-CERA C	CK725B1H-102K0	1	332031025R1		

C8117	C-CERA C	CK725B1H-102K0	1	332031025R1	<MDC, MDS, MMK, MMQ, MPB, MPP_A, MPP_H>
C8118	C-CERA C	CK725B1H-102K0	1	332031025R1	
C8119	C-CERA C	CK725B1C-104K0	1	332011045R1	
C8120	C-CERA C	CK725B1H-102K0	1	332031025R1	
C8121	C-CERA C	CK725B1C-104K0	1	332011045R1	
C8122	C-CERA C	CK725B1C-104K0	1	332011045R1	
C8123	CERA C	CC725CH1H-070C0	1	342030701R1	N
C8124	C-CERA C	CK725B1H-102K0	1	332031025R1	
C8125	C-CERA C	CK725B1H-102K0	1	332031025R1	
C8126	C-CERA C	CK725B1C-104K0	1	332011045R1	
C8127	CERA C	CC725CH1H-070C0	1	342030701R1	N
C8128	C-CERA C	CK725B1H-102K0	1	332031025R1	
C8129	C-CERA C	CK725B1C-104K0	1	332011045R1	
C8130	C-CERA C	CK725B1H-102K0	1	332031025R1	
C8131	C-CERA C	CK725B1H-102K0	1	332031025R1	
C8132	C-CERA C	CK725B1H-102K0	1	332031025R1	
C8133	C-CERA C	CK725B1C-104K0	1	332011045R1	
C8134	C-CERA C	CK725B1H-102K0	1	332031025R1	
C8135	C-CERA C	CK725B1C-104K0	1	332011045R1	
C8136	C-CERA C	CK725B1H-102K0	1	332031025R1	
C8137	C-CERA C	CK725B1C-104K0	1	332011045R1	
C8138	C-CERA C	CK725B1H-102K0	1	332031025R1	
C8139	C-CERA C	CK725B1H-102K0	1	332031025R1	
C8140	C-CERA C	CK725B1C-104K0	1	332011045R1	
C8141	C-CERA C	CK725B1H-102K0	1	332031025R1	
C8142	C-CERA C	CK725B1C-104K0	1	332011045R1	
C8143	C-CERA C	CK725B1H-102K0	1	332031025R1	
C8144	C-CERA C	CK725B1H-102K0	1	332031025R1	
C8145	C-CERA C	CK725B1H-102K0	1	332031025R1	
C8146	C-CERA C	CK725B1C-104K0	1	332011045R1	
C8147	C-CERA C	CK725B1H-102K0	1	332031025R1	
C8148	C-CERA C	CK725B1C-104K0	1	332011045R1	
C8149	C-CERA C	CK725B1H-102K0	1	332031025R1	
C8151	C-CERA C	CK725B1C-104K0	1	332011045R1	
C8152	C-CERA C	CK725B1H-102K0	1	332031025R1	
C8153	C-CERA C	CK725B1C-104K0	1	332011045R1	
C8154	C-CERA C	CK725B1H-102K0	1	332031025R1	
C8155	C-CERA C	CK725B1C-104K0	1	332011045R1	
C8156	C-CERA C	CK725B1H-102K0	1	332031025R1	

C8158	C-CERA C	CK725B1C-104K0	1	332011045R1	
C8159	C-CERA C	CK725B1H-102K0	1	332031025R1	
C8160	C-CERA C	CK725B1C-104K0	1	332011045R1	
C8161	C-CERA C	CK725B1H-102K0	1	332031025R1	
C8162	C-CERA C	CK725B1C-104K0	1	332011045R1	
C8163	C-CERA C	CK725B1H-102K0	1	332031025R1	
C8164	C-CERA C	CK725B1C-104K0	1	332011045R1	
C8165	C-CERA C	CK725B1H-102K0	1	332031025R1	
C8166	C-CERA C	CK725B1H-102K0	1	332031025R1	
C8168	C-CERA C	CK725B1H-102K0	1	332031025R1	
C8170	C-CERA C	CK725B1C-104K0	1	332011045R1	
C8175	C-CERA C	CK725B1H-102K0	1	332031025R1	
C8176	C-CERA C	CK725B1A-105K0	1	332001055R1	
C8177	C-CERA C	CK725B1A-105K0	1	332001055R1	
C8911	C-CERA C	CK732B16V-106K	1	332071065R2	N
C8921	C-CERA C	CK732B16V-106K	1	332071065R2	N
C8922	C-CERA C	CK732B16V-106K	1	332071065R2	N
C8926	C-CERA C	CK725B1A-105K0	1	332001055R1	
C8931	C-CERA C	CK725B1E-106K	1	332221065R2	
C8932	C-CERA C	CK725B1E-106K	1	332221065R2	
C8933	C-CERA C	CK732B16V-106K	1	332071065R2	N
C8934	C-CERA C	CK732B16V-106K	1	332071065R2	N
C8935	C-CERA C	CK732B16V-106K	1	332071065R2	N
C8936	CHIP ELECT C	CEWX16V-100M	1	398141017R2	
C8937	C-CERA C	CK725B1C-104K0	1	332011045R1	
C8938	C-CERA C	CK725B1E-223K0	1	332022235R1	N
C8939	C-CERA C	CK725B1C-104K0	1	332011045R1	
C8940	C-CERA C	CK725B1E-103K0	1	332021035R1	
C8943	C-CERA C	CC725CH1H-151J0	1	342031514R1	N
C8950	CHIP ELECT C	CEWX16V-100M	1	398141017R2	
C8951	C-CERA C	CK725B1E-106K	1	332221065R2	
C8952	C-CERA C	CK725B1E-106K	1	332221065R2	
C8953	C-CERA C	CK732B16V-106K	1	332071065R2	N
C8954	C-CERA C	CK732B16V-106K	1	332071065R2	N
C8955	C-CERA C	CK732B16V-106K	1	332071065R2	N
C8956	CHIP ELECT C	CEWX16V-100M	1	398141017R2	
C8957	C-CERA C	CK725B1C-104K0	1	332011045R1	
C8958	C-CERA C	CK725B1E-223K0	1	332022235R1	N
C8959	C-CERA C	CK725B1C-104K0	1	332011045R1	

C8960	C-CERA C	CK725B1E-103K0	1	332021035R1	
C8963	C-CERA C	CC725CH1H-151J0	1	342031514R1	N
C8971	C-CERA C	CK725B1E-106K	1	332221065R2	
C8972	C-CERA C	CK725B1E-106K	1	332221065R2	
C8973	C-CERA C	CK732B16V-106K	1	332071065R2	N
C8974	C-CERA C	CK732B16V-106K	1	332071065R2	N
C8975	C-CERA C	CK732B16V-106K	1	332071065R2	N
C8976	CHIP ELECT C	CEWX16V-100M	1	398141017R2	
C8977	C-CERA C	CK725B1C-104K0	1	332011045R1	
C8978	C-CERA C	CK725B1E-223K0	1	332022235R1	N
C8979	C-CERA C	CK725B1C-104K0	1	332011045R1	
C8980	C-CERA C	CK725B1E-682K0	1	332026825R1	N
C8983	C-CERA C	CK725B1A-105K0	1	332001055R1	
C8984	C-CERA C	CK725B1A-105K0	1	332001055R1	
C8985	C-CERA C	CK725B1A-105K0	1	332001055R1	
C8986	C-CERA C	CK725B1A-105K0	1	332001055R1	
C8987	C-CERA C	CK725B1A-105K0	1	332001055R1	
C8988	C-CERA C	CK725B1A-105K0	1	332001055R1	
[RESISTOR]					
R110	C-CARBON R	RN72K1J-103JE	1	435031034R1	
R151	C-CARBON R	RN72K1J-103JE	1	435031034R1	
R152	C-CARBON R	RN72K1J-103JE	1	435031034R1	
R154	C-CARBON R	RN72K1J-103JE	1	435031034R1	
R201	C-CARBON R	RN72K1J-103JE	1	435031034R1	
R202	C-CARBON R	RN72K1J-103JE	1	435031034R1	
R203	C-CARBON R	RN72K1J-103JE	1	435031034R1	
R204	C-CARBON R	RN72K1J-472JE	1	435034724R1	
R205	C-CARBON R	RN72K1J-221JE	1	435032214R1	
R206	C-CARBON R	RN72K1J-470JE	1	435034704R1	
R207	C-CARBON R	RN72K1J-470JE	1	435034704R1	
R208	C-CARBON R	RN72K1J-470JE	1	435034704R1	
R209	C-CARBON R	RN72K1J-470JE	1	435034704R1	
R210	C-CARBON R	RN72K1J-470JE	1	435034704R1	
R211	C-CARBON R	RN72K1J-470JE	1	435034704R1	
R212	C-CARBON R	RN72K1J-103JE	1	435031034R1	
R213	C-CARBON R	RN72K1J-103JE	1	435031034R1	
R214	C-CARBON R	RN72K1J-331JE	1	435033314R1	
R215	C-CARBON R	RN72K1J-103JE	1	435031034R1	
R216	C-CARBON R	RN72K1J-470JE	1	435034704R1	

R220	C-R NET	RM7LJ330X04	1	43484733004R2	
R221	C-R NET	RM7LJ330X04	1	43484733004R2	
R222	C-R NET	RM7LJ330X04	1	43484733004R2	
R223	C-R NET	RM7LJ330X04	1	43484733004R2	
R224	C-R NET	RM7LJ330X04	1	43484733004R2	
R225	C-R NET	RM7LJ330X04	1	43484733004R2	
R226	C-R NET	RM7LJ330X04	1	43484733004R2	
R227	C-R NET	RM7LJ330X04	1	43484733004R2	
R228	C-R NET	RM7LJ330X04	1	43484733004R2	
R229	C-R NET	RM7LJ330X04	1	43484733004R2	
R230	C-CARBON R	RN72K1J-330JE	1	435033304R1	
R231	C-CARBON R	RN72K1J-103JE	1	435031034R1	
R232	C-CARBON R	RN72K1J-103JE	1	435031034R1	
R235	C-CARBON R	RN72K1J-470JE	1	435034704R1	
R236	C-CARBON R	RN72K1J-470JE	1	435034704R1	
R237	C-CARBON R	RN72K1J-470JE	1	435034704R1	
R238	C-CARBON R	RN72K1J-331JE	1	435033314R1	
R239	C-CARBON R	RN72K1J-331JE	1	435033314R1	
R240	C-CARBON R	RN72K1J-331JE	1	435033314R1	
R241	C-CARBON R	RN72K1J-331JE	1	435033314R1	
R242	C-CARBON R	RN72K1J-470JE	1	435034704R1	
R243	C-CARBON R	RN72K1J-331JE	1	435033314R1	
R244	C-CARBON R	RN72K1J-221JE	1	435032214R1	
R245	C-CARBON R	RN72K1J-470JE	1	435034704R1	
R246	C-CARBON R	RN72K1J-470JE	1	435034704R1	
R247	C-CARBON R	RN72K1J-103JE	1	435031034R1	
R248	C-CARBON R	RN72K1J-331JE	1	435033314R1	
R249	C-CARBON R	RN72K1J-331JE	1	435033314R1	
R252	C-CARBON R	RN72K1J-000JE	1	435030004R1	
R253	C-CARBON R	RN72K1J-221JE	1	435032214R1	
R254	C-CARBON R	RN72K1J-103JE	1	435031034R1	
R255	C-CARBON R	RN72K1J-221JE	1	435032214R1	
R256	C-CARBON R	RN72K1J-470JE	1	435034704R1	
R257	C-CARBON R	RN72K1J-470JE	1	435034704R1	
R262	C-CARBON R	RN72K1J-103JE	1	435031034R1	
R263	C-CARBON R	RN72K1J-103JE	1	435031034R1	
R264	C-CARBON R	RN72K1J-103JE	1	435031034R1	
R265	C-CARBON R	RN72K1J-221JE	1	435032214R1	
R274	C-CARBON R	RN72K1J-000JE	1	435030004R1	<MDC, MDS, MMK, MMQ, MPB, MPP_A, MPP_H>

R275	C-CARBON R	RN72K1J-000JE	1	435030004R1	<MDC, MDS, MMK, MMQ, MPB, MPP_A, MPP_H>
R277	C-CARBON R	RN72K1J-222JE	1	435032224R1	
R281	C-CARBON R	RN72K1J-103JE	1	435031034R1	
R282	C-CARBON R	RN72K1J-103JE	1	435031034R1	
R284	C-CARBON R	RN72K1J-103JE	1	435031034R1	
R301	C-CARBON R	RN72K1J-470JE	1	435034704R1	
R304	C-CARBON R	RN72K1J-221JE	1	435032214R1	
R305	C-CARBON R	RN72K1J-221JE	1	435032214R1	
R306	C-CARBON R	RN72K1J-330JE	1	435033304R1	
R307	C-CARBON R	RN72K1J-331JE	1	435033314R1	
R308	C-CARBON R	RN72K1J-331JE	1	435033314R1	
R312	C-CARBON R	RN72K1J-470JE	1	435034704R1	
R313	C-CARBON R	RN72K1J-470JE	1	435034704R1	
R3134	C-CARBON R	RN72K1J-470JE	1	435034704R1	<MDC, MDS, MMK, MMQ, MPB, MPP_A, MPP_H>
R314	C-CARBON R	RN72K1J-151JE	1	435031514R1	
R315	C-CARBON R	RN72K1J-470JE	1	435034704R1	
R316	C-CARBON R	RN72K1J-470JE	1	435034704R1	
R317	C-CARBON R	RN72K1J-331JE	1	435033314R1	
R321	C-CARBON R	RN72K1J-331JE	1	435033314R1	
R322	C-CARBON R	RN72K1J-331JE	1	435033314R1	
R324	C-CARBON R	RN72K1J-331JE	1	435033314R1	
R325	C-CARBON R	RN72K1J-331JE	1	435033314R1	
R326	C-CARBON R	RN72K1J-331JE	1	435033314R1	
R327	C-CARBON R	RN72K1J-221JE	1	435032214R1	
R331	C-CARBON R	RN72K1J-221JE	1	435032214R1	
R332	C-CARBON R	RN72K1J-681JE	1	435036814R1	
R333	C-CARBON R	RN72K1J-221JE	1	435032214R1	
R351	C-CARBON R	RN72K1J-331JE	1	435033314R1	
R352	C-CARBON R	RN72K1J-331JE	1	435033314R1	
R354	C-CARBON R	RN72K1J-470JE	1	435034704R1	
R355	C-CARBON R	RN72K1J-220JE	1	435032204R1	
R356	C-CARBON R	RN72K1J-220JE	1	435032204R1	
R357	C-CARBON R	RN72K1J-220JE	1	435032204R1	
R359	C-CARBON R	RN72K1J-220JE	1	435032204R1	
R360	C-CARBON R	RN72K1J-220JE	1	435032204R1	
R361	C-CARBON R	RN72K1J-331JE	1	435033314R1	
R362	C-CARBON R	RN72K1J-000JE	1	435030004R1	
R365	C-CARBON R	RN72K1J-104JE	1	435031044R1	
R366	C-CARBON R	RN72K1J-104JE	1	435031044R1	

R367	C-CARBON R	RN72K1J-104JE	1	435031044R1	
R368	C-CARBON R	RN72K1J-104JE	1	435031044R1	
R369	C-CARBON R	RN72K1J-104JE	1	435031044R1	
R370	C-CARBON R	RN72K1J-104JE	1	435031044R1	
R501	C-CARBON R	RN72K1J-473JE	1	435034734R1	
R503	C-CARBON R	RN72K1J-103JE	1	435031034R1	
R504	C-CARBON R	RN72K1J-000JE	1	435030004R1	
R505	C-CARBON R	RN72K1J-103JE	1	435031034R1	
R508	C-CARBON R	RN72K1J-105JE	1	435031054R1	
R509	C-CARBON R	RN72K1J-221JE	1	435032214R1	
R510	C-CARBON R	RN72K1J-470JE	1	435034704R1	
R511	C-CARBON R	RN72K1J-103JE	1	435031034R1	
R512	C-CARBON R	RN72K1J-221JE	1	435032214R1	
R514	C-CARBON R	RN72K1J-221JE	1	435032214R1	
R515	C-R NET	RM7LJ470X04	1	43484747004R2	
R520	C-CARBON R	RN72K1J-103JE	1	435031034R1	
R521	C-R NET	RM7LJ470X04	1	43484747004R2	
R532	C-CARBON R	RN72K1J-472JE	1	435034724R1	
R533	C-CARBON R	RN72K1J-472JE	1	435034724R1	
R534	C-R NET	RM7LJ103X04	1	43484710304R2	
R538	C-CARBON R	RN72K1J-103JE	1	435031034R1	
R539	C-R NET	RM7LJ470X04	1	43484747004R2	
R543	C-CARBON R	RN72K1J-103JE	1	435031034R1	
R544	C-R NET	RM7LJ221X04	1	43484722104R2	
R550	C-R NET	RM7LJ470X04	1	43484747004R2	
R551	C-CARBON R	RN72K1J-103JE	1	435031034R1	
R552	C-CARBON R	RN72K1J-103JE	1	435031034R1	
R554	C-CARBON R	RN72K1J-103JE	1	435031034R1	
R557	C-CARBON R	RN72K1J-103JE	1	435031034R1	<MDC, MDS, MMK, MMQ, MPB, MPP_A, MPP_H>
R559	C-CARBON R	RN72K1J-272JE	1	435032724R1	<MDC, MDS, MMK, MMQ, MPB, MPP_A, MPP_H>
R560	C-CARBON R	RN72K1J-103JE	1	435031034R1	
R562	C-CARBON R	RN72K1J-221JE	1	435032214R1	
R565	C-R NET	RM7LJ470X04	1	43484747004R2	
R566	C-CARBON R	RN72K1J-103JE	1	435031034R1	
R568	C-CARBON R	RN72K1J-103JE	1	435031034R1	
R570	C-CARBON R	RN72K1J-103JE	1	435031034R1	
R572	C-CARBON R	RN72K1J-103JE	1	435031034R1	
R573	C-CARBON R	RN72K1J-221JE	1	435032214R1	
R574	C-R NET	RM7LJ470X04	1	43484747004R2	

R577	C-CARBON R	RN72K1J-103JE	1	435031034R1	
R579	C-CARBON R	RN72K1J-470JE	1	435034704R1	
R580	C-R NET	RM7LJ103X04	1	43484710304R2	
R582	C-R NET	RM7LJ221X04	1	43484722104R2	
R590	C-CARBON R	RN72K1J-103JE	1	435031034R1	
R595	C-R NET	RM7LJ221X04	1	43484722104R2	
R596	C-CARBON R	RN72K1J-103JE	1	435031034R1	
R599	C-R NET	RM7LJ103X04	1	43484710304R2	
R601	C-R NET	RM7LJ470X04	1	43484747004R2	
R605	C-CARBON R	RN72K1J-221JE	1	435032214R1	
R606	C-CARBON R	RN72K1J-470JE	1	435034704R1	
R607	C-CARBON R	RN72K1J-221JE	1	435032214R1	
R609	C-CARBON R	RN72K1J-102JE	1	435031024R1	
R610	C-CARBON R	RN72K1J-221JE	1	435032214R1	
R611	C-CARBON R	RN72K1J-102JE	1	435031024R1	
R613	C-CARBON R	RN72K1J-102JE	1	435031024R1	
R614	C-CARBON R	RN72K1J-103JE	1	435031034R1	
R615	C-CARBON R	RN72K1J-101JE	1	435031014R1	<MDC, MDS, MMK, MMQ, MPB, MPP_A, MPP_H>
R617	C-CARBON R	RN72K1J-221JE	1	435032214R1	
R618	C-CARBON R	RN72K1J-103JE	1	435031034R1	
R619	C-CARBON R	RN72K1J-470JE	1	435034704R1	
R620	C-CARBON R	RN72K1J-103JE	1	435031034R1	
R621	C-CARBON R	RN72K1J-221JE	1	435032214R1	
R622	C-CARBON R	RN72K1J-470JE	1	435034704R1	
R623	C-CARBON R	RN72K1J-103JE	1	435031034R1	
R624	C-CARBON R	RN72K1J-221JE	1	435032214R1	
R625	C-CARBON R	RN72K1J-470JE	1	435034704R1	
R627	C-CARBON R	RN72K1J-103JE	1	435031034R1	
R631	C-CARBON R	RN72K1J-470JE	1	435034704R1	
R633	C-CARBON R	RN72K1J-103JE	1	435031034R1	
R635	C-CARBON R	RN72K1J-103JE	1	435031034R1	
R638	C-CARBON R	RN72K1J-470JE	1	435034704R1	
R639	C-CARBON R	RN72K1J-103JE	1	435031034R1	
R640	C-CARBON R	RN72K1J-470JE	1	435034704R1	
R642	C-CARBON R	RN72K1J-221JE	1	435032214R1	
R644	C-CARBON R	RN72K1J-221JE	1	435032214R1	
R646	C-CARBON R	RN72K1J-221JE	1	435032214R1	
R650	C-CARBON R	RN72K1J-221JE	1	435032214R1	
R651	C-CARBON R	RN72K1J-103JE	1	435031034R1	

R652	C-CARBON R	RN72K1J-102JE	1	435031024R1	
R653	C-CARBON R	RN72K1J-105JE	1	435031054R1	
R655	C-CARBON R	RN72K1J-223JE	1	435032234R1	
R656	C-CARBON R	RN72K1J-223JE	1	435032234R1	
R657	C-CARBON R	RN72K1J-224JE	1	435032244R1	
R658	C-CARBON R	RN72K1J-221JE	1	435032214R1	
R659	C-CARBON R	RN72K1J-273JE	1	435032734R1	
R660	C-CARBON R	RN72K1J-221JE	1	435032214R1	
R661	C-CARBON R	RN72K1J-221JE	1	435032214R1	
R662	C-CARBON R	RN72K1J-000JE	1	435030004R1	<MDC, MDS, MMK, MMQ>
R662	C-CARBON R	RN72K1J-103JE	1	435031034R1	< MPB, MPP_A, MPP_H>
R663	C-CARBON R	RN72K1J-333JE	1	435033334R1	< MPB, MPP_A, MPP_H>
R664	C-CARBON R	RN72K1J-103JE	1	435031034R1	<MDC, MDS, MMK, MMQ, MPB, MPP_A, MPP_H>
R665	C-CARBON R	RN72K1J-333JE	1	435033334R1	<MDC, MDS, MMK, MMQ, MPB, MPP_A, MPP_H>
R666	C-CARBON R	RN72K1J-000JE	1	435030004R1	<MDC, MDS, MMK, MMQ, MPB, MPP_A, MPP_H>
R668	C-CARBON R	RN72K1J-103JE	1	435031034R1	<MDC, MDS>
R669	C-CARBON R	RN72K1J-103JE	1	435031034R1	<MMK, MMQ, MPB, MPP_A, MPP_H>
R669	C-CARBON R	RN72K1J-333JE	1	435033334R1	<MDC, MDS>
R670	C-CARBON R	RN72K1J-472JE	1	435034724R1	
R671	C-CARBON R	RN72K1J-272JE	1	435032724R1	
R672	C-CARBON R	RN72K1J-472JE	1	435034724R1	
R673	C-CARBON R	RN72K1J-272JE	1	435032724R1	
R674	C-CARBON R	RN72K1J-472JE	1	435034724R1	
R675	C-CARBON R	RN72K1J-272JE	1	435032724R1	
R676	C-CARBON R	RN72K1J-472JE	1	435034724R1	
R677	C-CARBON R	RN72K1J-272JE	1	435032724R1	
R678	C-CARBON R	RN72K1J-224JE	1	435032244R1	
R681	C-CARBON R	RN72K1J-103JE	1	435031034R1	
R682	C-CARBON R	RN72K1J-103JE	1	435031034R1	
R687	C-CARBON R	RN72K1J-103JE	1	435031034R1	
R688	C-R NET	RM7LJ103X04	1	43484710304R2	
R690	C-R NET	RM7LJ470X04	1	43484747004R2	
R692	C-R NET	RM7LJ472X04	1	43484747204R2	
R693	C-R NET	RM7LJ470X04	1	43484747004R2	
R701	C-CARBON R	RN72K1J-000JE	1	435030004R1	
R712	C-CARBON R	RN72K1J-102JE	1	435031024R1	
R713	C-CARBON R	RN72K1J-222JE	1	435032224R1	
R714	C-CARBON R	RN72K1J-103JE	1	435031034R1	
R715	C-CARBON R	RN72K1J-103JE	1	435031034R1	

R716	C-CARBON R	RN72K1J-470JE	1	435034704R1	
R723	C-CARBON R	RN72K1J-101JE	1	435031014R1	
R724	C-CARBON R	RN72K1J-101JE	1	435031014R1	
R725	C-CARBON R	RN72K1J-221JE	1	435032214R1	
R726	C-CARBON R	RN72K1J-273JE	1	435032734R1	
R727	C-CARBON R	RN72K1J-103JE	1	435031034R1	
R803	C-CARBON R	RN72K1J-000JE	1	435030004R1	
R8100	C-CARBON R	RN72K1J-102JE	1	435031024R1	<MDC, MDS, MMK, MMQ, MPB, MPP_A, MPP_H>
R8101	C-CARBON R	RN72K1J-000JE	1	435030004R1	<MDC, MDS, MMK, MMQ, MPB, MPP_A, MPP_H>
R8102	C-CARBON R	RN72K1J-473JE	1	435034734R1	<MDC, MDS, MMK, MMQ, MPB, MPP_A, MPP_H>
R8118	C-CARBON R	RN72K1J-102JE	1	435031024R1	
R8119	C-CARBON R	RN72K1J-102JE	1	435031024R1	
R8120	C-CARBON R	RN72K1J-000JE	1	435030004R1	
R8121	C-CARBON R	RN72K1J-102JE	1	435031024R1	
R8122	C-CARBON R	RN72K1J-473JE	1	435034734R1	
R8125	C-CARBON R	RN72K1J-101JE	1	435031014R1	
R8126	C-CARBON R	RN72K1J-101JE	1	435031014R1	
R8127	C-CARBON R	RN72K1J-330JE	1	435033304R1	
R8128	C-CARBON R	RN72K1J-331JE	1	435033314R1	
R8129	C-CARBON R	RN72K1J-330JE	1	435033304R1	
R8131	C-R NET	RM7LJ330X04	1	43484733004R2	
R8132	C-R NET	RM7LJ101X04	1	43484710104R2	
R8136	C-CARBON R	RN72K1J-102JE	1	435031024R1	
R8138	C-CARBON R	RN72K1J-000JE	1	435030004R1	
R8140	C-CARBON R	RN72K1J-473JE	1	435034734R1	
R8142	C-CARBON R	RN72K1J-220JE	1	435032204R1	
R8148	C-CARBON R	RN72K1J-473JE	1	435034734R1	
R8150	C-R NET	RM7LJ470X04	1	43484747004R2	
R8154	C-R NET	RM7LJ220X04	1	43484722004R2	
R8158	C-CARBON R	RN72K1J-473JE	1	435034734R1	
R8159	C-CARBON R	RN72K1J-182JE	1	435031824R1	
R8160	C-CARBON R	RN72K1J-182JE	1	435031824R1	
R8161	C-CARBON R	RN72K1J-821FE	1	435038212R1	
R8162	C-CARBON R	RN72K1J-680JE	1	435036804R1	
R8166	C-CARBON R	RN72K1J-102JE	1	435031024R1	
R8167	C-CARBON R	RN72K1J-000JE	1	435030004R1	
R8169	C-CARBON R	RN72K1J-473JE	1	435034734R1	
R8172	C-CARBON R	RN72K1J-103JE	1	435031034R1	
R8177	C-CARBON R	RN72K1J-101JE	1	435031014R1	

R8178	C-CARBON R	RN72K1J-101JE	1	435031014R1		
R8179	C-CARBON R	RN72K1J-101JE	1	435031014R1		
R8180	C-CARBON R	RN72K1J-101JE	1	435031014R1		
R8181	C-CARBON R	RN72K1J-100JE	1	435031004R1		
R8182	C-CARBON R	RN72K1J-100JE	1	435031004R1		
R8191	C-CARBON R	RN72K1J-103JE	1	435031034R1		
R8192	C-CARBON R	RN72K1J-103JE	1	435031034R1		
R8193	C-CARBON R	RN72K1J-103JE	1	435031034R1		
R8194	C-CARBON R	RN72K1J-103JE	1	435031034R1		<MDC, MDS,MMK, MMQ, MPB, MPP_A, MPP_H>
R8933	C-CARBON R	RN72K1J-563FE	1	435035632R1		
R8934	C-CARBON R	RN72K1J-274JE	1	435032744R1		
R8935	C-CARBON R	RN72K1J-103FE	1	435031032R1		
R8936	C-CARBON R	RN72K1J-822JE	1	435038224R1		
R8951	C-CARBON R	RN72K1J-103JE	1	435031034R1		
R8953	C-CARBON R	RN72K1J-273FE	1	435032732R1		
R8955	C-CARBON R	RN72K1J-103FE	1	435031032R1		
R8956	C-CARBON R	RN72K1J-562JE	1	435035624R1		
R8971	C-CARBON R	RN72K1J-102JE	1	435031024R1		
R8973	C-CARBON R	RN72K1J-103FE	1	435031032R1		
R8975	C-CARBON R	RN72K1J-103FE	1	435031032R1		
R8976	C-CARBON R	RN72K1J-332JE	1	435033324R1		
[SW TRM]						
JL501B	WIRE TRAP	NPLG-3P586	1	25055624		
JL801B	WIRE TRAP	NPLG-5P588	1	25055626		
JL901B	WIRE TRAP	NPLG-5P588	1	25055626		
P2001B	SOCKET	IMSA-9618S-07A	1	25053332R2		<MDC, MDS, MMK, MMQ, MPB, MPP_A, MPP_H>
P2001Bor	SOCKET	07FMN-SMT-A-TF	(1)	25052824R2		<MDC, MDS, MMK, MMQ, MPB, MPP_A, MPP_H>
P2800B	SOCKET	IMSA-9618S-09A	1	25053334R2		
P2800Bor	SOCKET	09FMN-SMT-A-TF	(1)	25052826R2		
P281	SOCKET	NSCT-8P2471	1	25052574R2		
P701A	SOCKET	IMSA-9618S-23A	1	25053348R2	N	
P701Aor	SOCKET	23FMN-SMT-A-TF	(1)	25052840R2		
P751A	SOCKET	IMSA-9618S-09A	1	25053334R2		
P751Aor	SOCKET	09FMN-SMT-A-TF	(1)	25052826R2		
P752A	SOCKET	NSCT-9P2472	1	25052575R2		
P8001B	SOCKET	IMSA-9618S-21A	1	25053346R2	N	
P8001Bor	SOCKET	21FMN-SMT-A-TF	(1)	25052838R2		
P8002B	SOCKET	IMSA-9618S-09A	1	25053334R2		
P8002Bor	SOCKET	09FMN-SMT-A-TF	(1)	25052826R2		

P8003A	SOCKET	NSCT-7P2187	1	25052290		
P8101	SOCKET	TCX3400-111387	1	25053406R3		<MDC, MDS, MMK, MMQ, MPB, MPP_A, MPP_H>
P8101 or	SOCKET	YKF45-7037V	(1)	25053253R3		<MDC, MDS, MMK, MMQ, MPB, MPP_A, MPP_H>
P8101 or	SOCKET	HDMI(47266-4101)	(1)	25053389R3		<MDC, MDS, MMK, MMQ, MPB, MPP_A, MPP_H>
P8101 or	SOCKET	061-043-079	(1)	25053407R3		<MDC, MDS, MMK, MMQ, MPB, MPP_A, MPP_H>
P8102	SOCKET	TCX3400-111387	1	25053406R3	N	
P8102 or	SOCKET	YKF45-7037V	(1)	25053253R3		
P8102 or	SOCKET	HDMI(47266-4101)	(1)	25053389R3		
P8102 or	SOCKET	061-043-079	(1)	25053407R3	N	
P8103	SOCKET	TCX3400-111387	1	25053406R3	N	
P8103 or	SOCKET	YKF45-7037V	(1)	25053253R3		
P8103 or	SOCKET	HDMI(47266-4101)	(1)	25053389R3		
P8103 or	SOCKET	061-043-079	(1)	25053407R3	N	
P8104	SOCKET	TCX3400-111387	1	25053406R3	N	
P8104 or	SOCKET	YKF45-7037V	(1)	25053253R3		
P8104 or	SOCKET	HDMI(47266-4101)	(1)	25053389R3		
P8104 or	SOCKET	061-043-079	(1)	25053407R3	N	
P8105	SOCKET	TCX3400-111387	1	25053406R3	N	
P8105 or	SOCKET	YKF45-7037V	(1)	25053253R3		
P8105 or	SOCKET	HDMI(47266-4101)	(1)	25053389R3		
P8105 or	SOCKET	061-043-079	(1)	25053407R3	N	
P8901	SOCKET	NSCT-8P2471	1	25052574R2		

ONKYO®

ONKYO SOUND & VISION CORPORATION
Technical Support, Service Dept.: 2-1, Nisshin-cho, Neyagawa-shi, OSAKA 572-8540, JAPAN
Tel: 072-831-8023 Fax: 072-831-8163

ONKYO U.S.A. CORPORATION
18 Park Way, Upper Saddle River, N.J. 07458, U.S.A.
Tel: 800-229-1687, 201-785-2600 Fax: 201-785-2650 http://www.us.onkyo.com/

ONKYO EUROPE ELECTRONICS GmbH
Liegnitzerstrasse 6, 82194 Groebenzell, GERMANY
Tel: +49-8142-4401-0 Fax: +49-8142-4401-555 http://www.eu.onkyo.com/

ONKYO EUROPE ELECTRONICS GmbH (UK BRANCH)
The Coach House 81A High Street, Marlow, Buckinghamshire, SL7 1AB, UK
Tel: +44-(0)1628-473-350 Fax: +44-(0)1628-401-700

ONKYO CHINA LIMITED
Unit 1&12, 9/F, Ever Gain Plaza Tower 1, 88, Container Port Road, Kwai Chung,
N.T., Hong Kong. Tel: 852-2429-3118 Fax: 852-2428-9039
http://www.ch.onkyo.com/