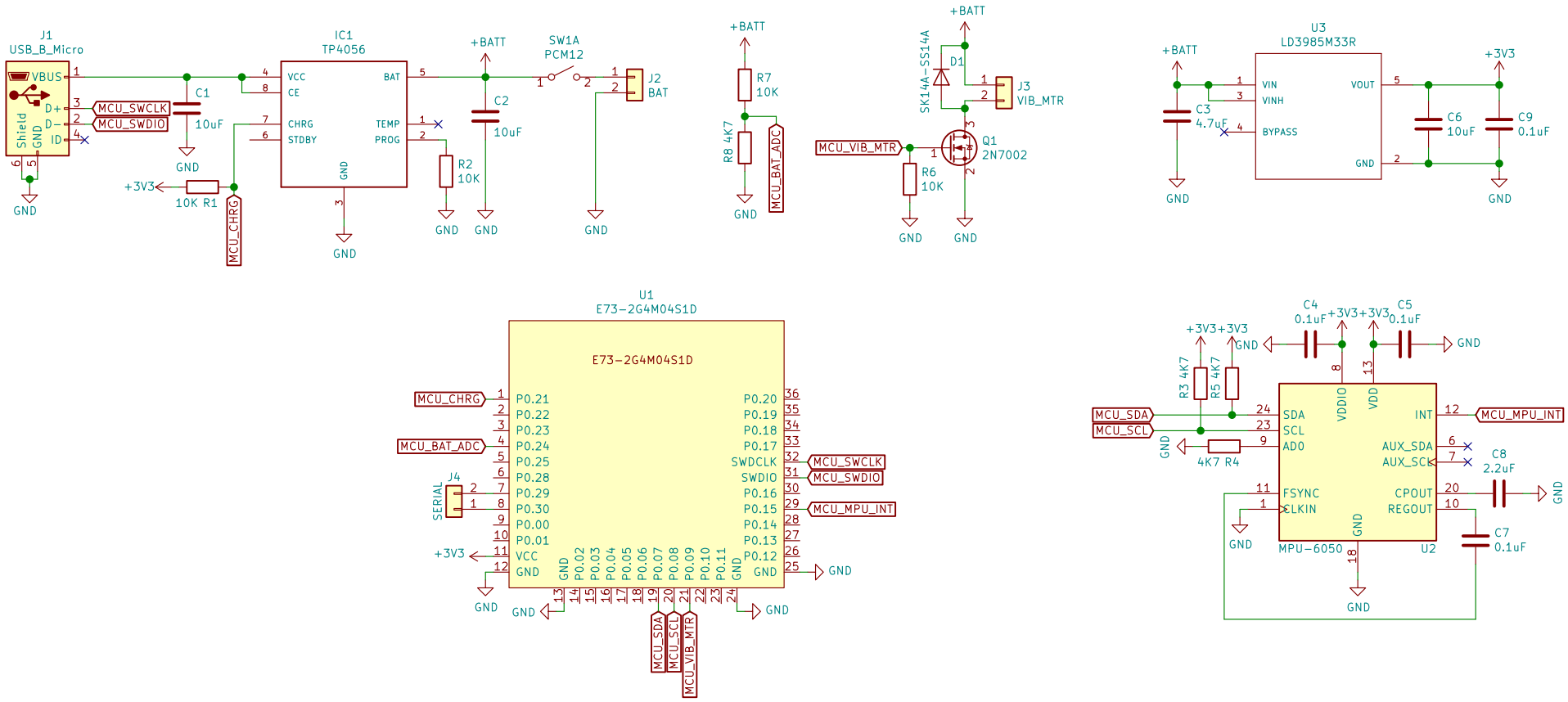

Silard Gal

Sheet: /

File: watch.sch

Title: Secret watch project

Size: A4	Date: 2019-07-16	**Rev: 1.0**
KiCad E.D.A. kicad (5.1.2)-1		Id: 1/1