MANTA M8P

SCH. Blockdiagram

1. CM4
2. Endstop
3. EXP
4. MCU
5. MOS
6. Motor
7. Power

Version. Version

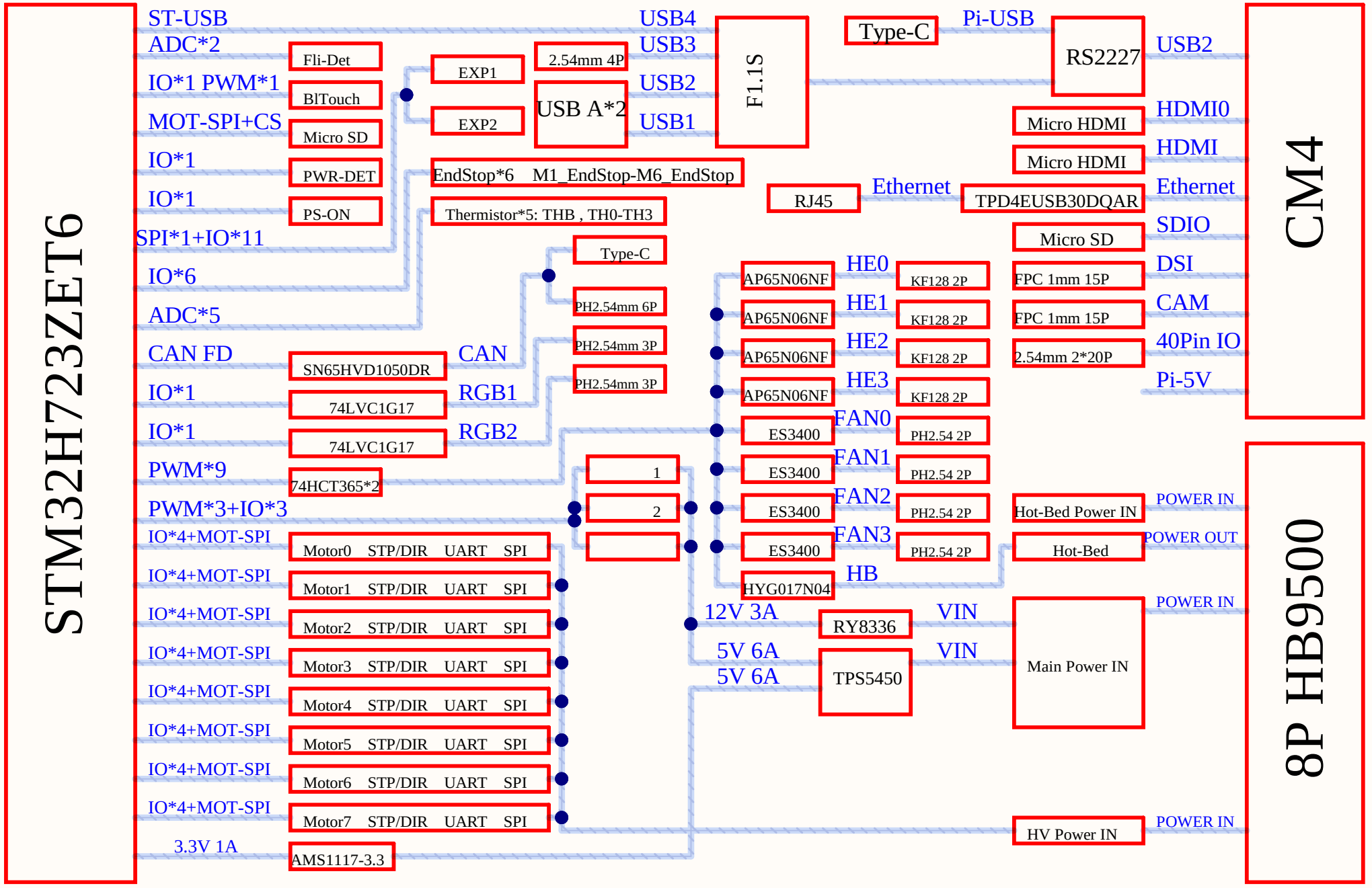
STM32H723ZET6
ST-USB
ADC*2
IO*1 PWM*1
MOT-SPI+CS
IO*1
IO*1
SPI*1+IO*11
IO*6
ADC*5
CAN FD
IO*1
IO*1
PWM*9
PWM*3+IO*3
IO*4+MOT-SPI
IO*4+MOT-SPI
IO*4+MOT-SPI
IO*4+MOT-SPI
IO*4+MOT-SPI
IO*4+MOT-SPI
IO*4+MOT-SPI
3.3V 1A
Fli-Det
BlTouch
Micro SD
PWR-DET
PS-ON
SN65HVD1050DR
74LVC1G17
74LVC1G17
74HCT365*2
Motor0 STP/DIR UART SPI
Motor1 STP/DIR UART SPI
Motor2 STP/DIR UART SPI
Motor3 STP/DIR UART SPI
Motor4 STP/DIR UART SPI
Motor5 STP/DIR UART SPI
Motor6 STP/DIR UART SPI
Motor7 STP/DIR UART SPI
AMS1117-3.3
CAN
RGB1
RGB2
EXP1
EXP2
2.54mm 4P
USB A*2
USB4
USB3
USB2
USB1
F1.1S
EndStop*6 M1_EndStop-M6_EndStop
Thermistor*5: THB , TH0-TH3
Type-C
PH2.54mm 6P
PH2.54mm 3P
PH2.54mm 3P
1
2
AP65N06NF
AP65N06NF
AP65N06NF
AP65N06NF
ES3400
ES3400
ES3400
ES3400
HYG017N04
HE0
HE1
HE2
HE3
FAN0
FAN1
FAN2
FAN3
HB
KF128 2P
KF128 2P
KF128 2P
KF128 2P
PH2.54 2P
PH2.54 2P
PH2.54 2P
PH2.54 2P
12V 3A
5V 6A
5V 6A
RY8336
TPS5450
VIN
VIN
Type-C
Pi-USB
RS2227
USB2
RJ45
Ethernet
TPD4EUSB30DQAR
Ethernet
Micro HDMI
HDMI0
Micro HDMI
HDMI
Micro SD
SDIO
FPC 1mm 15P
DSI
FPC 1mm 15P
CAM
2.54mm 2*20P
40Pin IO
Pi-5V
Hot-Bed Power IN
POWER IN
Hot-Bed
POWER OUT
Main Power IN
POWER IN
HV Power IN
POWER IN
CM4
8P HB9500

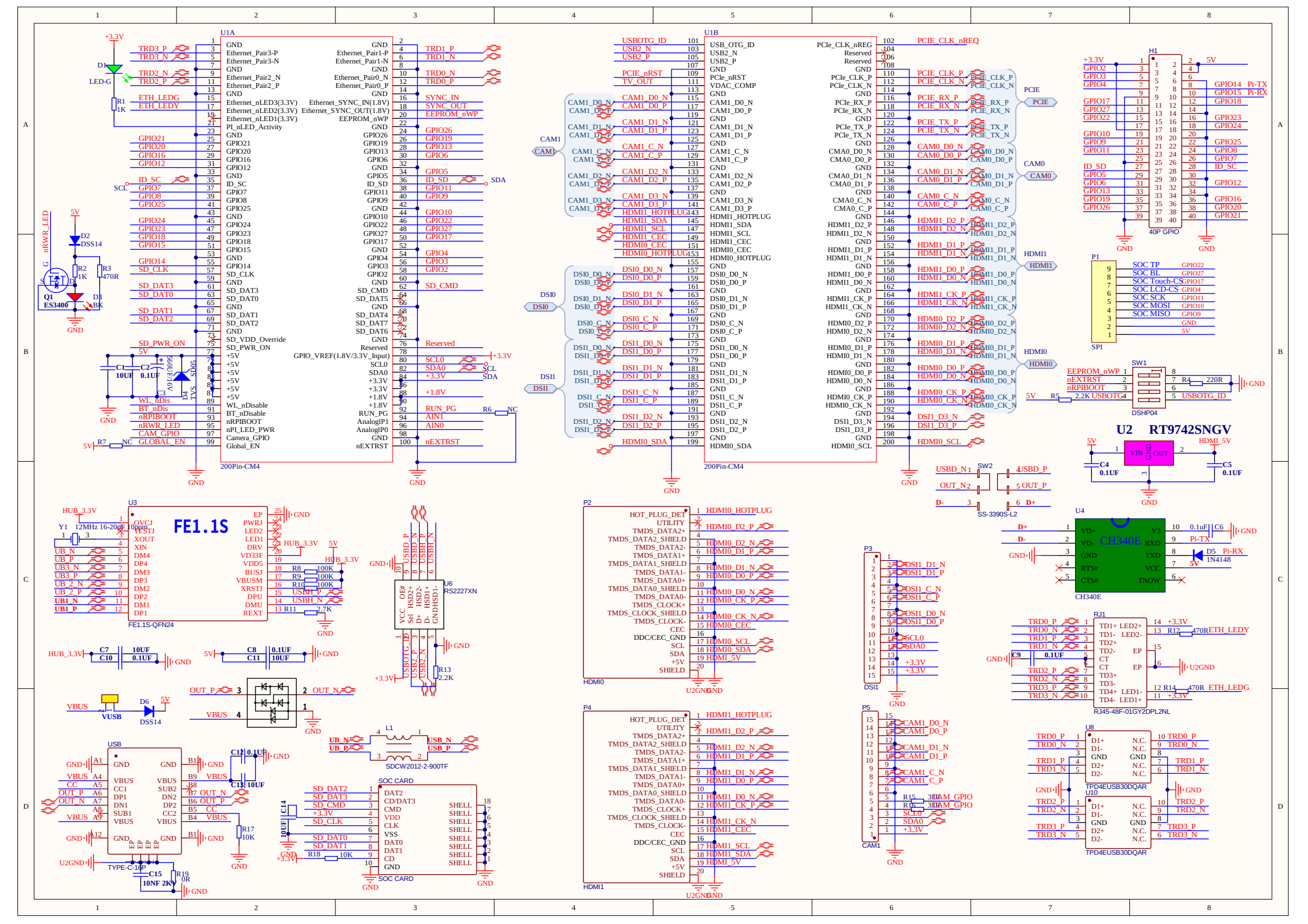
U1A
200Pin-CM4
U1B
200Pin-CM4
U2 RT9742SNGV
H1
40P GPIO
P1
SPI
SW1
DSHP04
SW2
SS-3390S-L2
U3
FE1.1S
FE1.1S-QFN24
U4
CH340E
CH340E
U6
RS2227XN
P2
HDMI0
P3
DSI1
P4
HDMI1
P5
CAM1
RJ1
RJ45-48F-01GY2DPL2NL
U8
TPD4EUSB30DQAR
U10
TPD4EUSB30DQAR
USB
TYPE-C-16P
SOC CARD
L1
SDCW2012-2-900TF
Q1
ES3400
D1
LED-G
D2
DSS14
D3
BK
D4
TVS_SD05
D6
DSS14
VUSB
Y1
12MHz 16-20pF 10ppm
GND
5V
+3.3V
HUB_3.3V
1N4148
ETH_LEDG
ETH_LEDY
ETH_LEDY
ETH_LEDG
Pi-TX
Pi-RX
SOC TP
SOC BL
SOC Touch-CS
SOC LCD-CS
SOC SCK
SOC MOSI
SOC MISO
EEPROM_nWP
nEXTRST
nRPIBOOT
USBOTG_ID
USBD_N
OUT_N
OUT_P
D-
D+
SCL
SDA
ID_SC
ID_SD
Reserved
RUN_PG
nEXTRST
nRWR_LED
WL_nDis
BT_nDis
nRPIBOOT
nRWR_LED
CAM_GPIO
GLOBAL_EN
SD_PWR_ON
SD_CMD
SD_CLK
SD_DAT0
SD_DAT1
SD_DAT2
SD_DAT3
SD_DAT4
SD_DAT5
SD_DAT6
SD_DAT7
CAM0
CAM1
DSI0
DSI1
HDMI0
HDMI1
PCIE
HDMI_5V
U2GND
NC

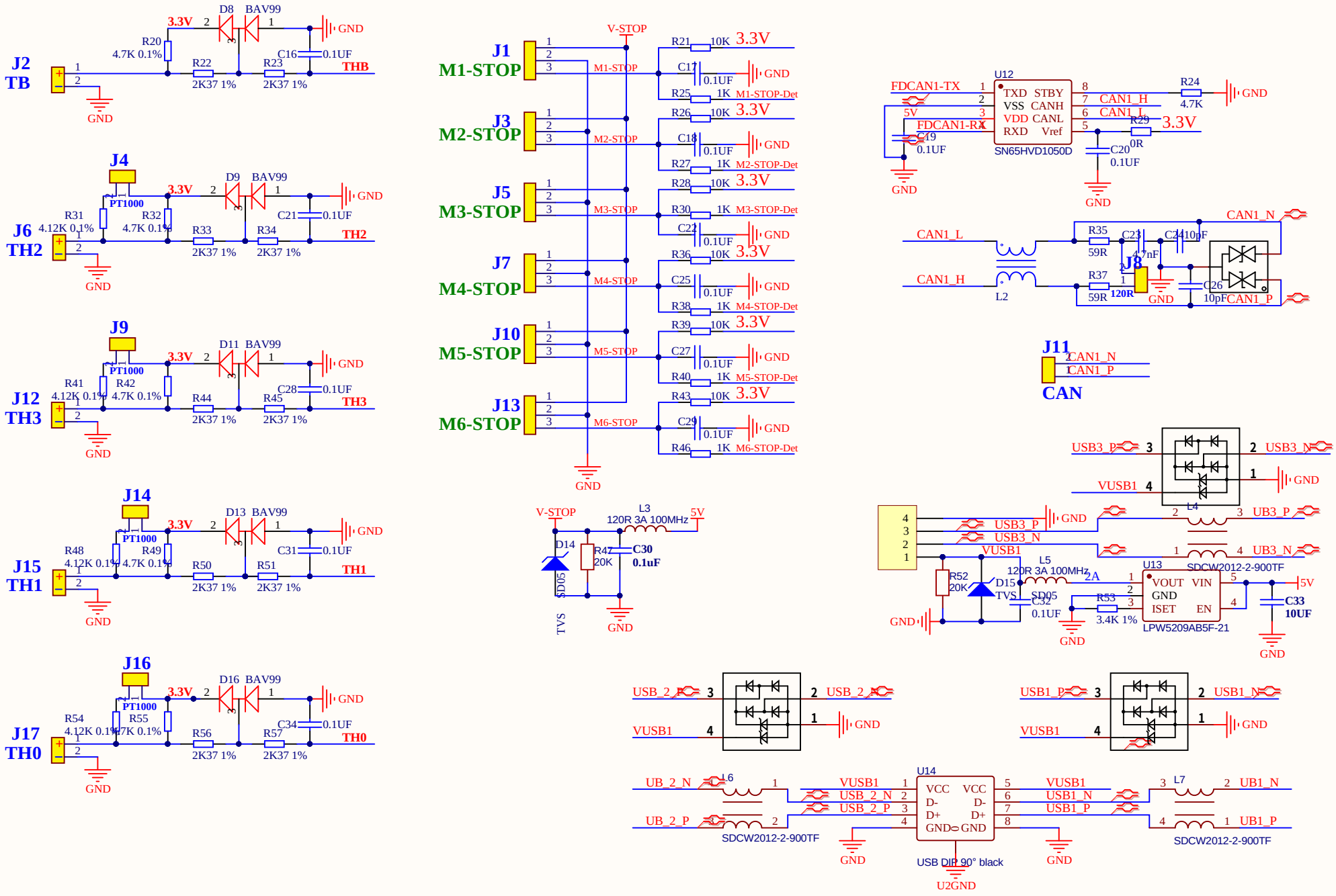
J2
TB
D8 BAV99
3.3V
R20 4.7K 0.1%
R22 2K37 1%
R23 2K37 1%
C16 0.1UF
THB
GND
J4
J6
TH2
D9 BAV99
PT1000
R31 4.12K 0.1%
R32 4.7K 0.1%
R33 2K37 1%
R34 2K37 1%
C21 0.1UF
TH2
J9
J12
TH3
D11 BAV99
R41 4.12K 0.1%
R42 4.7K 0.1%
R44 2K37 1%
R45 2K37 1%
C28 0.1UF
TH3
J14
J15
TH1
D13 BAV99
R48 4.12K 0.1%
R49 4.7K 0.1%
R50 2K37 1%
R51 2K37 1%
C31 0.1UF
TH1
J16
J17
TH0
D16 BAV99
R54 4.12K 0.1%
R55 4.7K 0.1%
R56 2K37 1%
R57 2K37 1%
C34 0.1UF
TH0
V-STOP
J1
M1-STOP
J3
M2-STOP
J5
M3-STOP
J7
M4-STOP
J10
M5-STOP
J13
M6-STOP
R21 10K 3.3V
C17 0.1UF
R25 1K M1-STOP-Det
R26 10K 3.3V
C18 0.1UF
R27 1K M2-STOP-Det
R28 10K 3.3V
C22 0.1UF
R30 1K M3-STOP-Det
R36 10K 3.3V
C25 0.1UF
R38 1K M4-STOP-Det
R39 10K 3.3V
C27 0.1UF
R40 1K M5-STOP-Det
R43 10K 3.3V
C29 0.1UF
R46 1K M6-STOP-Det
L3 120R 3A 100MHz 5V
D14 SD05 TVS
R47 20K
C30 0.1uF
U12 SN65HVD1050D
FDCAN1-TX
FDCAN1-RX
TXD STBY
VSS CANH
VDD CANL
RXD Vref
CAN1_H
CAN1_L
R24 4.7K
R29 3.3V
C19 0.1UF
C20 0R 0.1UF
J8 120R
R35 59R
R37 59R
C23 4.7nF
C24 10pF
C26 10pF
L2
J11
CAN
CAN1_N
CAN1_P
USB3_P
USB3_N
VUSB1
UB3_P
UB3_N
L4
L5 120R 3A 100MHz 2A
D15 TVS SD05
R52 20K
C32 0.1UF
R53 3.4K 1%
U13 LPW5209AB5F-21
VOUT VIN
GND ISET EN
SDCW2012-2-900TF
C33 10UF
5V
USB_2_P
USB_2_N
USB1_P
USB1_N
UB_2_P
UB_2_N
UB1_P
UB1_N
L6
L7
U14
VCC D- D+ GND
USB DIP 90° black
U2GND

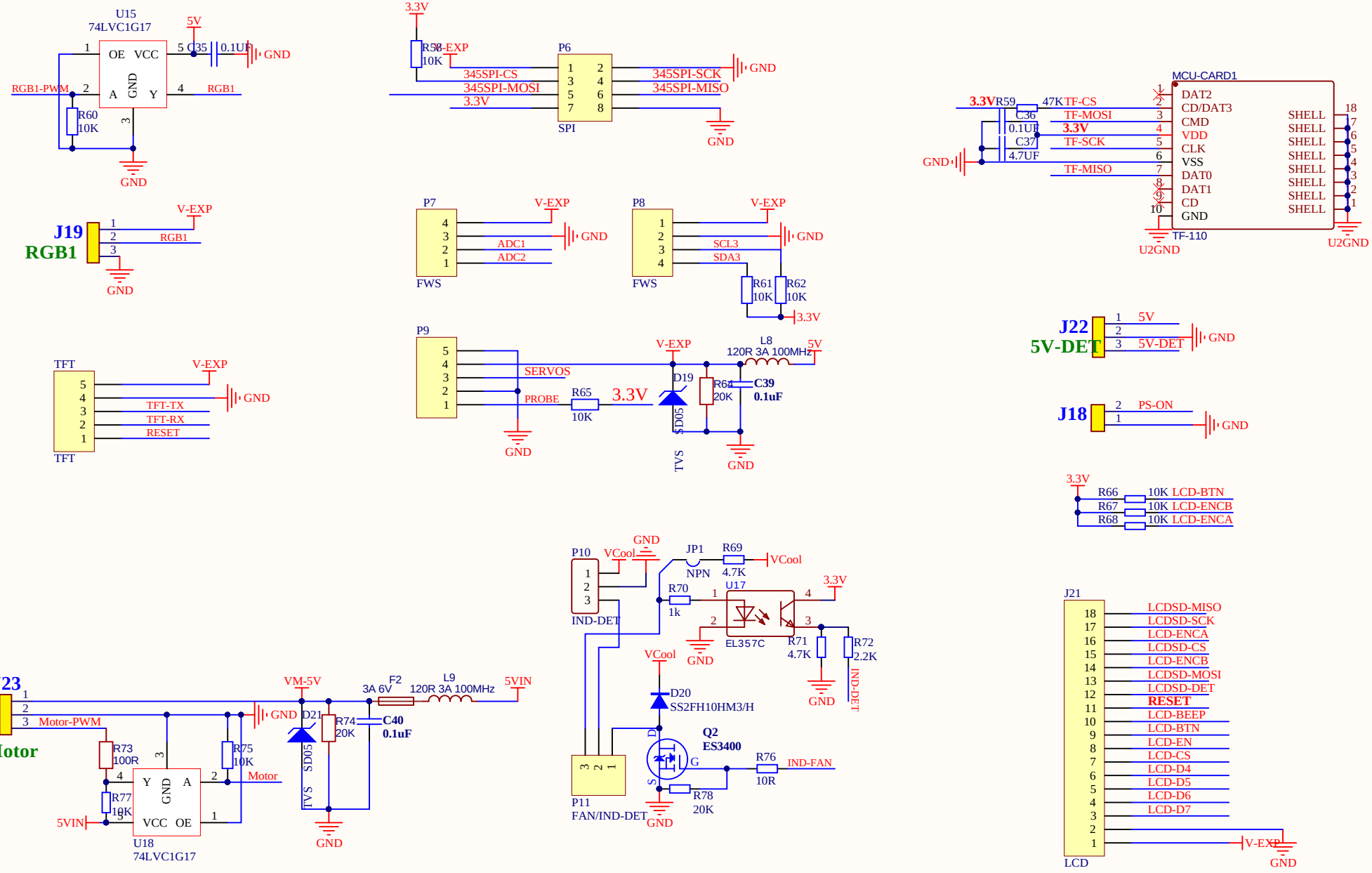
U15
74LVC1G17
5V
OE VCC
A GND Y
RGB1-PWM
RGB1
R60
10K
C35
0.1UF
GND
3.3V
R58
10K
V-EXP
345SPI-CS
345SPI-MOSI
3.3V
P6
345SPI-SCK
345SPI-MISO
SPI
MCU-CARD1
3.3V
R59
47K
C36
0.1UF
C37
4.7UF
TF-CS
TF-MOSI
TF-SCK
TF-MISO
DAT2
CD/DAT3
CMD
VDD
CLK
VSS
DAT0
DAT1
CD
GND
SHELL
TF-110
U2GND
J19
RGB1
P7
ADC1
ADC2
FWS
P8
SCL3
SDA3
R61
10K
R62
10K
TFT
TFT-TX
TFT-RX
RESET
P9
SERVOS
PROBE
R65
10K
D19
SD05
TVS
L8
120R 3A 100MHz
R64
20K
C39
0.1uF
J22
5V-DET
J18
PS-ON
R66
R67
R68
10K LCD-BTN
10K LCD-ENCB
10K LCD-ENCA
J23
Motor
Motor-PWM
R73
100R
R75
10K
R77
10K
U18
74LVC1G17
VM-5V
F2
3A 6V
L9
120R 3A 100MHz
5VIN
D21
R74
20K
C40
0.1uF
P10
IND-DET
JP1
NPN
R69
4.7K
R70
1k
U17
EL357C
R71
4.7K
R72
2.2K
D20
SS2FH10HM3/H
Q2
ES3400
R76
10R
R78
20K
IND-FAN
P11
FAN/IND-DET
J21
LCD
LCDSD-MISO
LCDSD-SCK
LCD-ENCA
LCDSD-CS
LCD-ENCB
LCDSD-MOSI
LCDSD-DET
RESET
LCD-BEEP
LCD-BTN
LCD-EN
LCD-CS
LCD-D4
LCD-D5
LCD-D6
LCD-D7

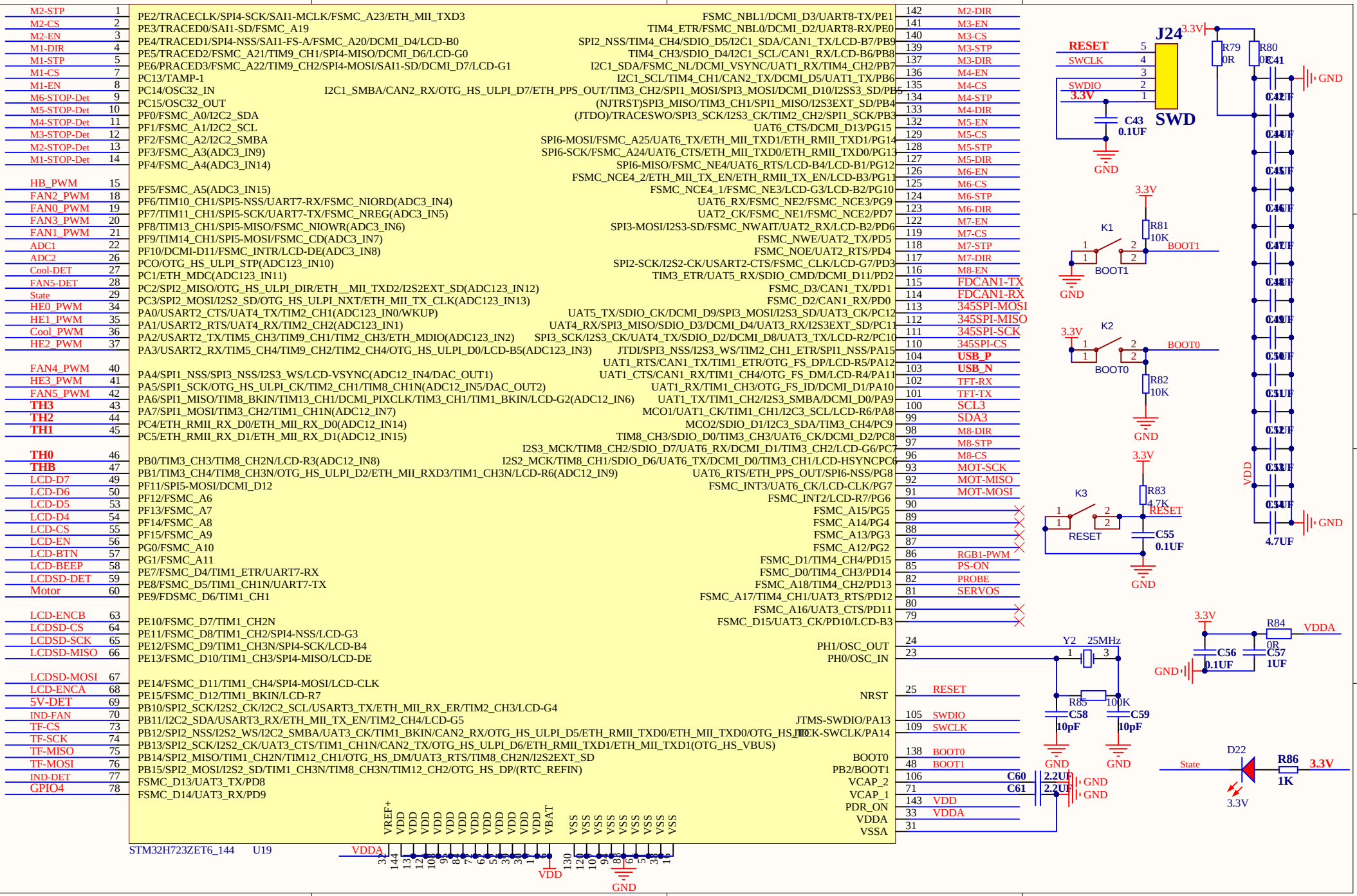
M2-STP 1
M2-CS 2
M2-EN 3
M1-DIR 4
M1-STP 5
M1-CS 7
M1-EN 8
M6-STOP-Det 9
M5-STOP-Det 10
M4-STOP-Det 11
M3-STOP-Det 12
M2-STOP-Det 13
M1-STOP-Det 14
HB_PWM 15
FAN2_PWM 18
FAN0_PWM 19
FAN3_PWM 20
FAN1_PWM 21
ADC1 22
ADC2 26
Cool-DET 27
FAN5-DET 28
State 29
HE0_PWM 34
HE1_PWM 35
Cool_PWM 36
HE2_PWM 37
FAN4_PWM 40
HE3_PWM 41
FAN5_PWM 42
TH3 43
TH2 44
TH1 45
TH0 46
THB 47
LCD-D7 49
LCD-D6 50
LCD-D5 53
LCD-D4 54
LCD-CS 55
LCD-EN 56
LCD-BTN 57
LCD-BEEP 58
LCDSD-DET 59
Motor 60
LCD-ENCB 63
LCDSD-CS 64
LCDSD-SCK 65
LCDSD-MISO 66
LCDSD-MOSI 67
LCD-ENCA 68
5V-DET 69
IND-FAN 70
TF-CS 73
TF-SCK 74
TF-MISO 75
TF-MOSI 76
IND-DET 77
GPIO4 78
PE2/TRACECLK/SPI4-SCK/SAI1-MCLK/FSMC_A23/ETH_MII_TXD3
PE3/TRACED0/SAI1-SD/FSMC_A19
PE4/TRACED1/SPI4-NSS/SAI1-FS-A/FSMC_A20/DCMI_D4/LCD-B0
PE5/TRACED2/FSMC_A21/TIM9_CH1/SPI4-MISO/DCMI_D6/LCD-G0
PE6/PRACED3/FSMC_A22/TIM9_CH2/SPI4-MOSI/SAI1-SD/DCMI_D7/LCD-G1
PC13/TAMP-1
PC14/OSC32_IN
PC15/OSC32_OUT
PF0/FSMC_A0/I2C2_SDA
PF1/FSMC_A1/I2C2_SCL
PF2/FSMC_A2/I2C2_SMBA
PF3/FSMC_A3(ADC3_IN9)
PF4/FSMC_A4(ADC3_IN14)
PF5/FSMC_A5(ADC3_IN15)
PF6/TIM10_CH1/SPI5-NSS/UART7-RX/FSMC_NIORD(ADC3_IN4)
PF7/TIM11_CH1/SPI5-SCK/UART7-TX/FSMC_NREG(ADC3_IN5)
PF8/TIM13_CH1/SPI5-MISO/FSMC_NIOWR(ADC3_IN6)
PF9/TIM14_CH1/SPI5-MOSI/FSMC_CD(ADC3_IN7)
PF10/DCMI-D11/FSMC_INTR/LCD-DE(ADC3_IN8)
PCO/OTG_HS_ULPI_STP(ADC123_IN10)
PC1/ETH_MDC(ADC123_IN11)
PC2/SPI2_MISO/OTG_HS_ULPI_DIR/ETH__MII_TXD2/I2S2EXT_SD(ADC123_IN12)
PC3/SPI2_MOSI/I2S2_SD/OTG_HS_ULPI_NXT/ETH_MII_TX_CLK(ADC123_IN13)
PA0/USART2_CTS/UAT4_TX/TIM2_CH1(ADC123_IN0/WKUP)
PA1/USART2_RTS/UAT4_RX/TIM2_CH2(ADC123_IN1)
PA2/USART2_TX/TIM5_CH3/TIM9_CH1/TIM2_CH3/ETH_MDIO(ADC123_IN2)
PA3/USART2_RX/TIM5_CH4/TIM9_CH2/TIM2_CH4/OTG_HS_ULPI_D0/LCD-B5(ADC123_IN3)
PA4/SPI1_NSS/SPI3_NSS/I2S3_WS/LCD-VSYNC(ADC12_IN4/DAC_OUT1)
PA5/SPI1_SCK/OTG_HS_ULPI_CK/TIM2_CH1/TIM8_CH1N(ADC12_IN5/DAC_OUT2)
PA6/SPI1_MISO/TIM8_BKIN/TIM13_CH1/DCMI_PIXCLK/TIM3_CH1/TIM1_BKIN/LCD-G2(ADC12_IN6)
PA7/SPI1_MOSI/TIM3_CH2/TIM1_CH1N(ADC12_IN7)
PC4/ETH_RMII_RX_D0/ETH_MII_RX_D0(ADC12_IN14)
PC5/ETH_RMII_RX_D1/ETH_MII_RX_D1(ADC12_IN15)
PB0/TIM3_CH3/TIM8_CH2N/LCD-R3(ADC12_IN8)
PB1/TIM3_CH4/TIM8_CH3N/OTG_HS_ULPI_D2/ETH_MII_RXD3/TIM1_CH3N/LCD-R6(ADC12_IN9)
PF11/SPI5-MOSI/DCMI_D12
PF12/FSMC_A6
PF13/FSMC_A7
PF14/FSMC_A8
PF15/FSMC_A9
PG0/FSMC_A10
PG1/FSMC_A11
PE7/FSMC_D4/TIM1_ETR/UART7-RX
PE8/FSMC_D5/TIM1_CH1N/UART7-TX
PE9/FDSMC_D6/TIM1_CH1
PE10/FSMC_D7/TIM1_CH2N
PE11/FSMC_D8/TIM1_CH2/SPI4-NSS/LCD-G3
PE12/FSMC_D9/TIM1_CH3N/SPI4-SCK/LCD-B4
PE13/FSMC_D10/TIM1_CH3/SPI4-MISO/LCD-DE
PE14/FSMC_D11/TIM1_CH4/SPI4-MOSI/LCD-CLK
PE15/FSMC_D12/TIM1_BKIN/LCD-R7
PB10/SPI2_SCK/I2S2_CK/I2C2_SCL/USART3_TX/ETH_MII_RX_ER/TIM2_CH3/LCD-G4
PB11/I2C2_SDA/USART3_RX/ETH_MII_TX_EN/TIM2_CH4/LCD-G5
PB12/SPI2_NSS/I2S2_WS/I2C2_SMBA/UAT3_CK/TIM1_BKIN/CAN2_RX/OTG_HS_ULPI_D5/ETH_RMII_TXD0/ETH_MII_TXD0/OTG_HS_ID
PB13/SPI2_SCK/I2S2_CK/UAT3_CTS/TIM1_CH1N/CAN2_TX/OTG_HS_ULPI_D6/ETH_RMII_TXD1/ETH_MII_TXD1(OTG_HS_VBUS)
PB14/SPI2_MISO/TIM1_CH2N/TIM12_CH1/OTG_HS_DM/UAT3_RTS/TIM8_CH2N/I2S2EXT_SD
PB15/SPI2_MOSI/I2S2_SD/TIM1_CH3N/TIM8_CH3N/TIM12_CH2/OTG_HS_DP/(RTC_REFIN)
FSMC_D13/UAT3_TX/PD8
FSMC_D14/UAT3_RX/PD9
FSMC_NBL1/DCMI_D3/UART8-TX/PE1
TIM4_ETR/FSMC_NBL0/DCMI_D2/UART8-RX/PE0
SPI2_NSS/TIM4_CH4/SDIO_D5/I2C1_SDA/CAN1_TX/LCD-B7/PB9
TIM4_CH3/SDIO_D4/I2C1_SCL/CAN1_RX/LCD-B6/PB8
I2C1_SDA/FSMC_NL/DCMI_VSYNC/UAT1_RX/TIM4_CH2/PB7
I2C1_SCL/TIM4_CH1/CAN2_TX/DCMI_D5/UAT1_TX/PB6
I2C1_SMBA/CAN2_RX/OTG_HS_ULPI_D7/ETH_PPS_OUT/TIM3_CH2/SPI1_MOSI/SPI3_MOSI/DCMI_D10/I2SS3_SD/PB5
(NJTRST)SPI3_MISO/TIM3_CH1/SPI1_MISO/I2S3EXT_SD/PB4
(JTDO)/TRACESWO/SPI3_SCK/I2S3_CK/TIM2_CH2/SPI1_SCK/PB3
UAT6_CTS/DCMI_D13/PG15
SPI6-MOSI/FSMC_A25/UAT6_TX/ETH_MII_TXD1/ETH_RMII_TXD1/PG14
SPI6-SCK/FSMC_A24/UAT6_CTS/ETH_MII_TXD0/ETH_RMII_TXD0/PG13
SPI6-MISO/FSMC_NE4/UAT6_RTS/LCD-B4/LCD-B1/PG12
FSMC_NCE4_2/ETH_MII_TX_EN/ETH_RMII_TX_EN/LCD-B3/PG11
FSMC_NCE4_1/FSMC_NE3/LCD-G3/LCD-B2/PG10
UAT6_RX/FSMC_NE2/FSMC_NCE3/PG9
UAT2_CK/FSMC_NE1/FSMC_NCE2/PD7
SPI3-MOSI/I2S3-SD/FSMC_NWAIT/UAT2_RX/LCD-B2/PD6
FSMC_NWE/UAT2_TX/PD5
FSMC_NOE/UAT2_RTS/PD4
SPI2-SCK/I2S2-CK/USART2-CTS/FSMC_CLK/LCD-G7/PD3
TIM3_ETR/UAT5_RX/SDIO_CMD/DCMI_D11/PD2
FSMC_D3/CAN1_TX/PD1
FSMC_D2/CAN1_RX/PD0
UAT5_TX/SDIO_CK/DCMI_D9/SPI3_MOSI/I2S3_SD/UAT3_CK/PC12
UAT4_RX/SPI3_MISO/SDIO_D3/DCMI_D4/UAT3_RX/I2S3EXT_SD/PC11
SPI3_SCK/I2S3_CK/UAT4_TX/SDIO_D2/DCMI_D8/UAT3_TX/LCD-R2/PC10
JTDI/SPI3_NSS/I2S3_WS/TIM2_CH1_ETR/SPI1_NSS/PA15
UAT1_RTS/CAN1_TX/TIM1_ETR/OTG_FS_DP/LCD-R5/PA12
UAT1_CTS/CAN1_RX/TIM1_CH4/OTG_FS_DM/LCD-R4/PA11
UAT1_RX/TIM1_CH3/OTG_FS_ID/DCMI_D1/PA10
UAT1_TX/TIM1_CH2/I2S3_SMBA/DCMI_D0/PA9
MCO1/UAT1_CK/TIM1_CH1/I2C3_SCL/LCD-R6/PA8
MCO2/SDIO_D1/I2C3_SDA/TIM3_CH4/PC9
TIM8_CH3/SDIO_D0/TIM3_CH3/UAT6_CK/DCMI_D2/PC8
I2S3_MCK/TIM8_CH2/SDIO_D7/UAT6_RX/DCMI_D1/TIM3_CH2/LCD-G6/PC7
I2S2_MCK/TIM8_CH1/SDIO_D6/UAT6_TX/DCMI_D0/TIM3_CH1/LCD-HSYNCPC6
UAT6_RTS/ETH_PPS_OUT/SPI6-NSS/PG8
FSMC_INT3/UAT6_CK/LCD-CLK/PG7
FSMC_INT2/LCD-R7/PG6
FSMC_A15/PG5
FSMC_A14/PG4
FSMC_A13/PG3
FSMC_A12/PG2
FSMC_D1/TIM4_CH4/PD15
FSMC_D0/TIM4_CH3/PD14
FSMC_A18/TIM4_CH2/PD13
FSMC_A17/TIM4_CH1/UAT3_RTS/PD12
FSMC_A16/UAT3_CTS/PD11
FSMC_D15/UAT3_CK/PD10/LCD-B3
PH1/OSC_OUT
PH0/OSC_IN
NRST
JTMS-SWDIO/PA13
JTCK-SWCLK/PA14
BOOT0
PB2/BOOT1
VCAP_2
VCAP_1
PDR_ON
VDDA
VSSA
142 M2-DIR
141 M3-EN
140 M3-CS
139 M3-STP
137 M3-DIR
136 M4-EN
135 M4-CS
134 M4-STP
133 M4-DIR
132 M5-EN
129 M5-CS
128 M5-STP
127 M5-DIR
126 M6-EN
125 M6-CS
124 M6-STP
123 M6-DIR
122 M7-EN
119 M7-CS
118 M7-STP
117 M7-DIR
116 M8-EN
115 FDCAN1-TX
114 FDCAN1-RX
113 345SPI-MOSI
112 345SPI-MISO
111 345SPI-SCK
110 345SPI-CS
104 USB_P
103 USB_N
102 TFT-RX
101 TFT-TX
100 SCL3
99 SDA3
98 M8-DIR
97 M8-STP
96 M8-CS
93 MOT-SCK
92 MOT-MISO
91 MOT-MOSI
90
89
88
87
86 RGB1-PWM
85 PS-ON
82 PROBE
81 SERVOS
80
79
24
23
25 RESET
105 SWDIO
109 SWCLK
138 BOOT0
48 BOOT1
106
71
143 VDD
33 VDDA
31
STM32H723ZET6_144 U19
VREF+ VDD VDD VDD VDD VDD VDD VDD VDD VDD VDD VDD VDD VBAT
VSS VSS VSS VSS VSS VSS VSS VSS VSS
32 144 13 12 10 9 8 7 6 5 3 2 1
130 120 10 9 8 6 5 3 16
VDDA
VDD
GND
J24
RESET
SWCLK
SWDIO
3.3V
SWD
C43 0.1UF
R79 0R
R80 0R
C41 0.1UF
C42 0.1UF
C44 0.1UF
C45 0.1UF
C46 0.1UF
C47 0.1UF
C48 0.1UF
C49 0.1UF
C50 0.1UF
C51 0.1UF
C52 0.1UF
C53 0.1UF
C54 0.1UF
4.7UF
K1
BOOT1
R81 10K
K2
BOOT0
R82 10K
K3
RESET
R83 4.7K
C55 0.1UF
Y2 25MHz
R85 100K
C58 10pF
C59 10pF
C60 2.2UF
C61 2.2UF
R84 0R
C56 0.1UF
C57 1UF
VDDA
D22
State
R86 1K

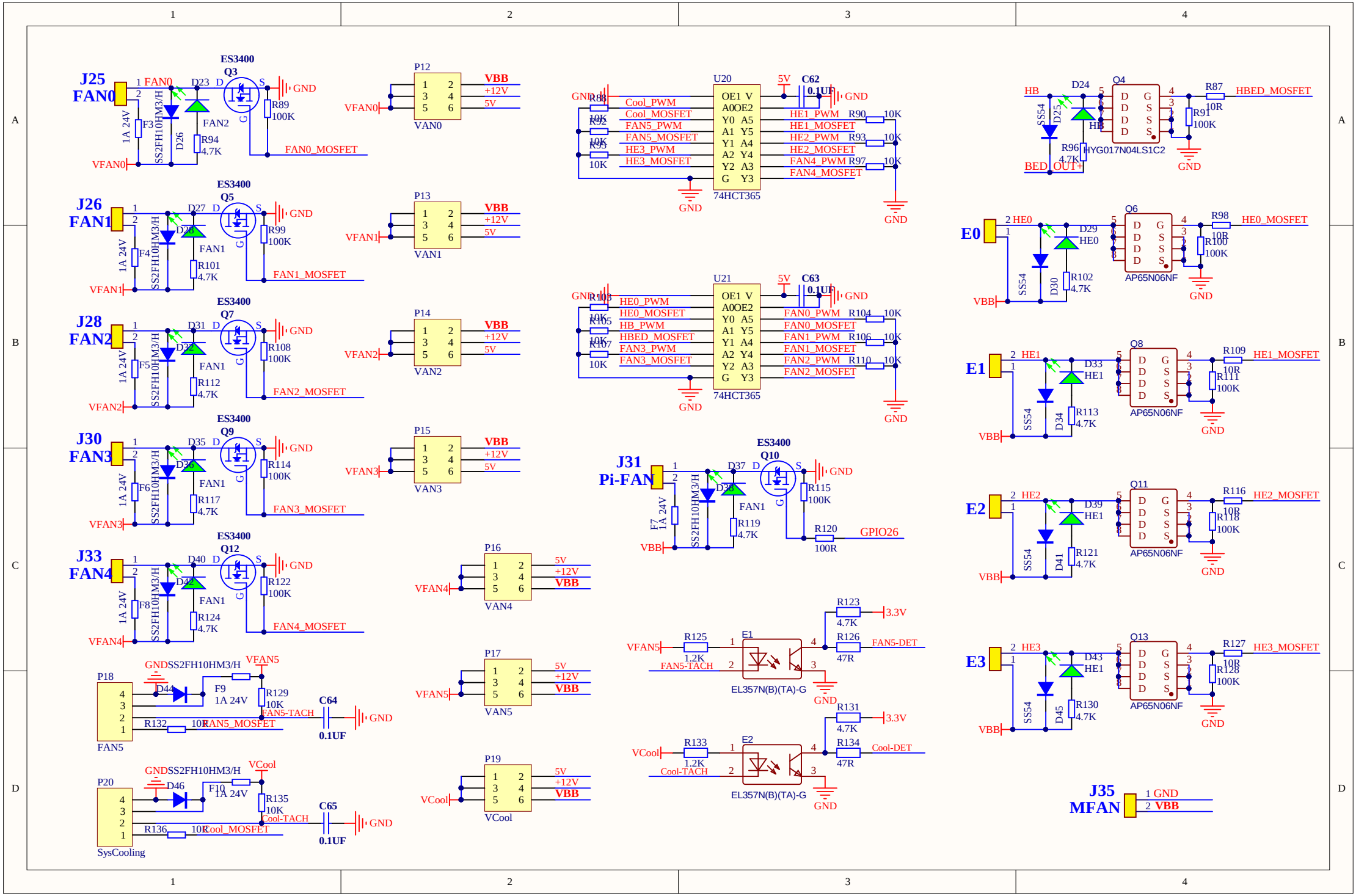

J25
FAN0
J26
FAN1
J28
FAN2
J30
FAN3
J33
FAN4
ES3400
Q3
Q5
Q7
Q9
Q12
P12
P13
P14
P15
P16
P17
P18
P19
P20
VAN0
VAN1
VAN2
VAN3
VAN4
VAN5
VCool
VBB
+12V
5V
GND
FAN0_MOSFET
FAN1_MOSFET
FAN2_MOSFET
FAN3_MOSFET
FAN4_MOSFET
FAN5_MOSFET
FAN5-TACH
Cool-TACH
Cool_MOSFET
SysCooling
U20
U21
74HCT365
C62
C63
0.1UF
Cool_PWM
Cool_MOSFET
FAN5_PWM
FAN5_MOSFET
HE3_PWM
HE3_MOSFET
HE1_PWM
HE1_MOSFET
HE2_PWM
HE2_MOSFET
FAN4_PWM
FAN4_MOSFET
HE0_PWM
HE0_MOSFET
HB_PWM
HBED_MOSFET
FAN3_PWM
FAN3_MOSFET
FAN0_PWM
FAN0_MOSFET
FAN1_PWM
FAN1_MOSFET
FAN2_PWM
FAN2_MOSFET
J31
Pi-FAN
Q10
GPIO26
E1
E2
EL357N(B)(TA)-G
FAN5-DET
Cool-DET
3.3V
HYG017N04LS1C2
HBED_MOSFET
BED_OUT+
E0
E1
E2
E3
Q4
Q6
Q8
Q11
Q13
AP65N06NF
HE0_MOSFET
HE1_MOSFET
HE2_MOSFET
HE3_MOSFET
J35
MFAN

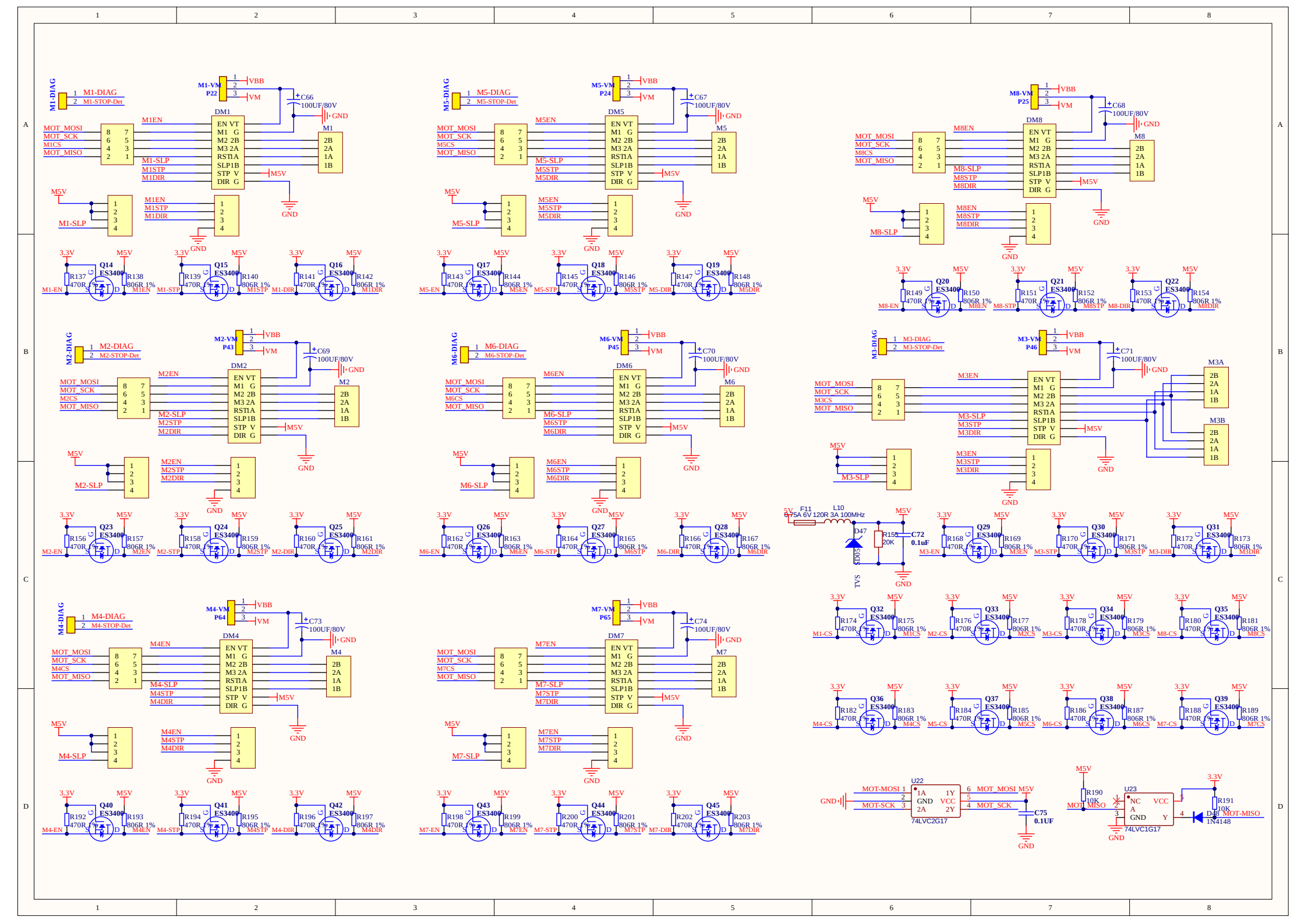
M1-DIAG
M1-STOP-Det
M1-VM
P22
VBB
VM
C66
100UF/80V
GND
DM1
M1
M1EN
M1-SLP
M1STP
M1DIR
M5V
MOT_MOSI
MOT_SCK
M1CS
MOT_MISO
M5-DIAG
M5-STOP-Det
M5-VM
P24
C67
DM5
M5
M5EN
M5-SLP
M5STP
M5DIR
M8-VM
P25
C68
DM8
M8
M8EN
M8-SLP
M8STP
M8DIR
M8CS
M2-DIAG
M2-STOP-Det
M2-VM
P43
C69
DM2
M2
M2EN
M2-SLP
M2STP
M2DIR
M2CS
M6-DIAG
M6-STOP-Det
M6-VM
P45
C70
DM6
M6
M6EN
M6-SLP
M6STP
M6DIR
M6CS
M3-DIAG
M3-STOP-Det
M3-VM
P46
C71
M3A
M3B
M3EN
M3-SLP
M3STP
M3DIR
M3CS
M4-DIAG
M4-STOP-Det
M4-VM
P64
C73
DM4
M4
M4EN
M4-SLP
M4STP
M4DIR
M4CS
M7-DIAG
M7-STOP-Det
M7-VM
P65
C74
DM7
M7
M7EN
M7-SLP
M7STP
M7DIR
M7CS
100UF/80V
EN VT
M1 G
M2 2B
M3 2A
RST1A
SLP1B
STP V
DIR G
2B
2A
1A
1B
3.3V
Q14 ES3400
Q15 ES3400
Q16 ES3400
Q17 ES3400
Q18 ES3400
Q19 ES3400
Q20 ES3400
Q21 ES3400
Q22 ES3400
Q23 ES3400
Q24 ES3400
Q25 ES3400
Q26 ES3400
Q27 ES3400
Q28 ES3400
Q29 ES3400
Q30 ES3400
Q31 ES3400
Q32 ES3400
Q33 ES3400
Q34 ES3400
Q35 ES3400
Q36 ES3400
Q37 ES3400
Q38 ES3400
Q39 ES3400
Q40 ES3400
Q41 ES3400
Q42 ES3400
Q43 ES3400
Q44 ES3400
Q45 ES3400
470R
806R 1%
M1-EN
M1-STP
M1-DIR
M5-EN
M5-STP
M5-DIR
M8-EN
M8-STP
M8-DIR
M2-EN
M2-STP
M2-DIR
M6-EN
M6-STP
M6-DIR
M3-EN
M3-STP
M3-DIR
M4-EN
M4-STP
M4-DIR
M7-EN
M7-STP
M7-DIR
5V
F11
0775A 6V 120R 3A 100MHz
L10
D47
SD05
TVS
R155
20K
C72
0.1uF
M1-CS
M2-CS
M3-CS
M4-CS
M5-CS
M6-CS
M7-CS
M8-CS
U22
74LVC2G17
MOT-MOSI
MOT-SCK
C75
0.1UF
U23
74LVC1G17
R190
10K
R191
10K
MOT_MISO
1N4148

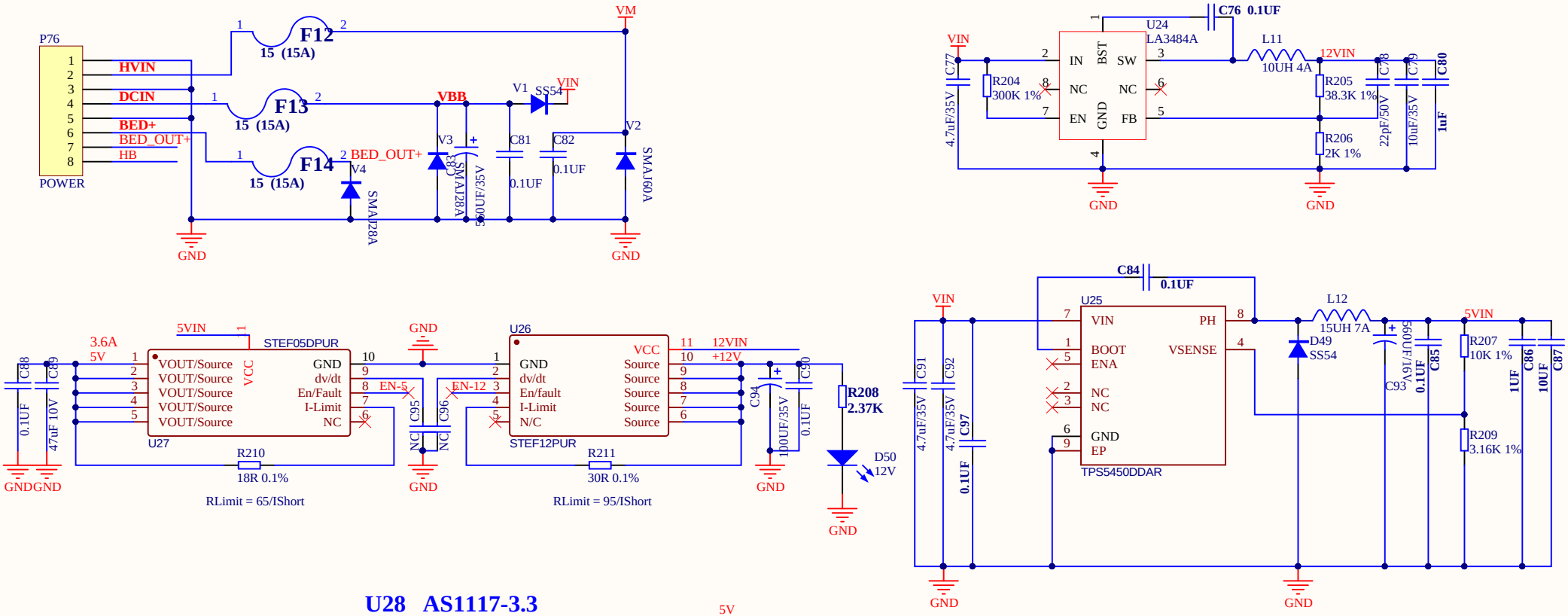
P76
HVIN
DCIN
BED+
BED_OUT+
HB
POWER
F12
15 (15A)
F13
15 (15A)
F14
15 (15A)
VM
VBB
V1
SS54
VIN
V2
SMAJ60A
V3
SMAJ28A
C83
560UF/35V
C81
0.1UF
C82
0.1UF
V4
SMAJ28A
GND
C76 0.1UF
U24
LA3484A
L11
10UH 4A
12VIN
C77
4.7uF/35V
R204
300K 1%
R205
38.3K 1%
R206
2K 1%
C78
22pF/50V
C79
10uF/35V
C80
1uF
3.6A
5V
5VIN
STEF05DPUR
U27
VOUT/Source
VCC
GND
dv/dt
En/Fault
I-Limit
NC
EN-5
C88
0.1UF
C89
47uF 10V
C95
NC
C96
NC
R210
18R 0.1%
RLimit = 65/IShort
U26
STEF12PUR
N/C
Source
EN-12
12VIN
+12V
C94
100UF/35V
C90
0.1UF
R208
2.37K
D50
12V
R211
30R 0.1%
RLimit = 95/IShort
C84
0.1UF
U25
TPS5450DDAR
VIN
PH
BOOT
ENA
VSENSE
NC
GND
EP
L12
15UH 7A
D49
SS54
C91
4.7uF/35V
C92
4.7uF/35V
C97
0.1UF
C93
560UF/16V
C85
0.1UF
R207
10K 1%
R209
3.16K 1%
C86
1UF
C87
10UF
U28 AS1117-3.3
C98
1UF
C99
1UF
R213
1K
3.3V
D52
R212
1K
D51
5V

Revision History

Version	Date	Author	Change Note
V2.0	2023.06.13	Byron JK	
V2.0.1	2024.04.13	Byron JK	Change the resistance value between the USB port casing and GND to 0R.