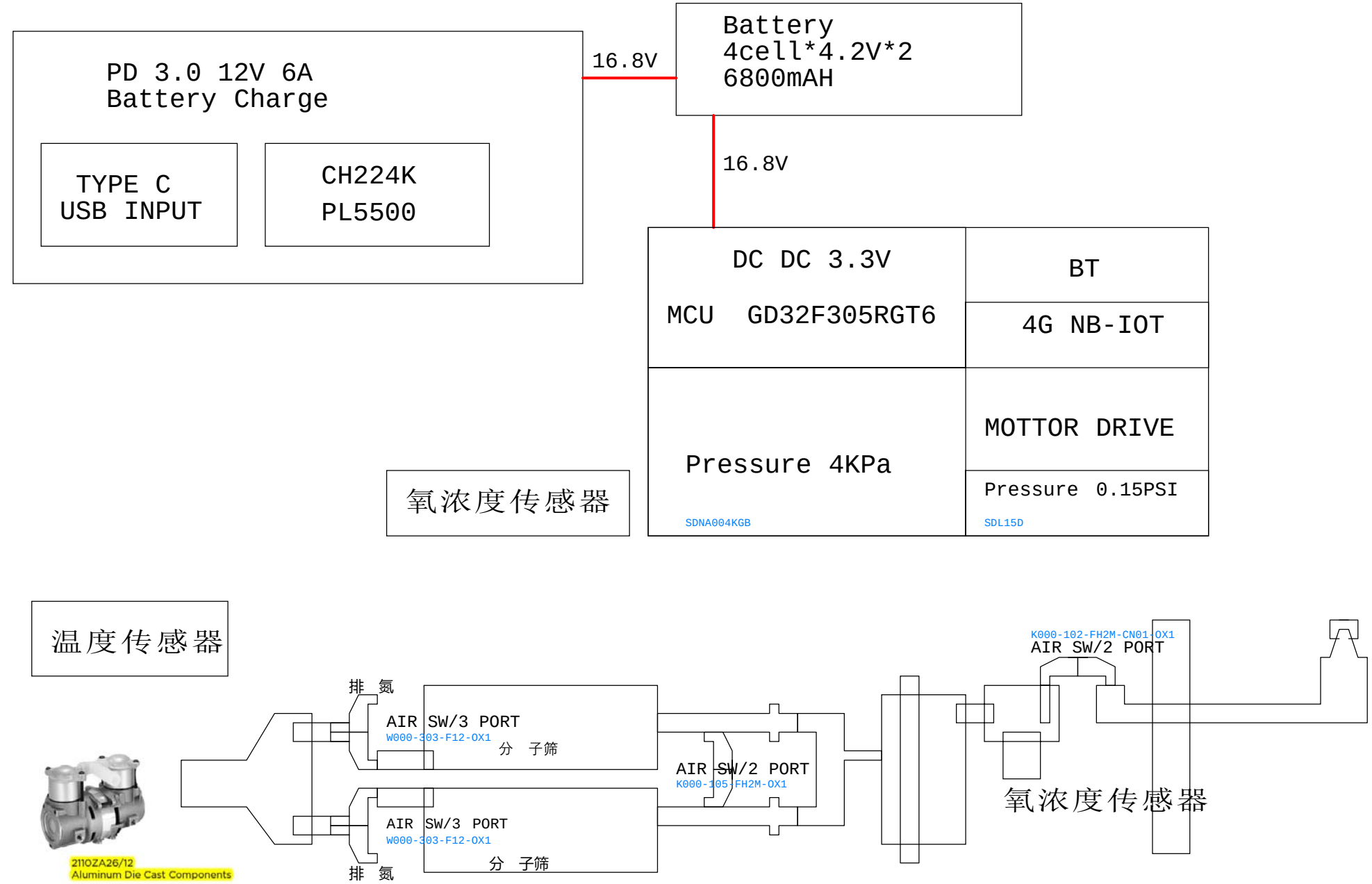

Design by:	Title KF60-01		
Check by:	Size A3	Document Number BLOCK DIG	Rev 10
Approve by:	Date:		Sheet 1 of 6

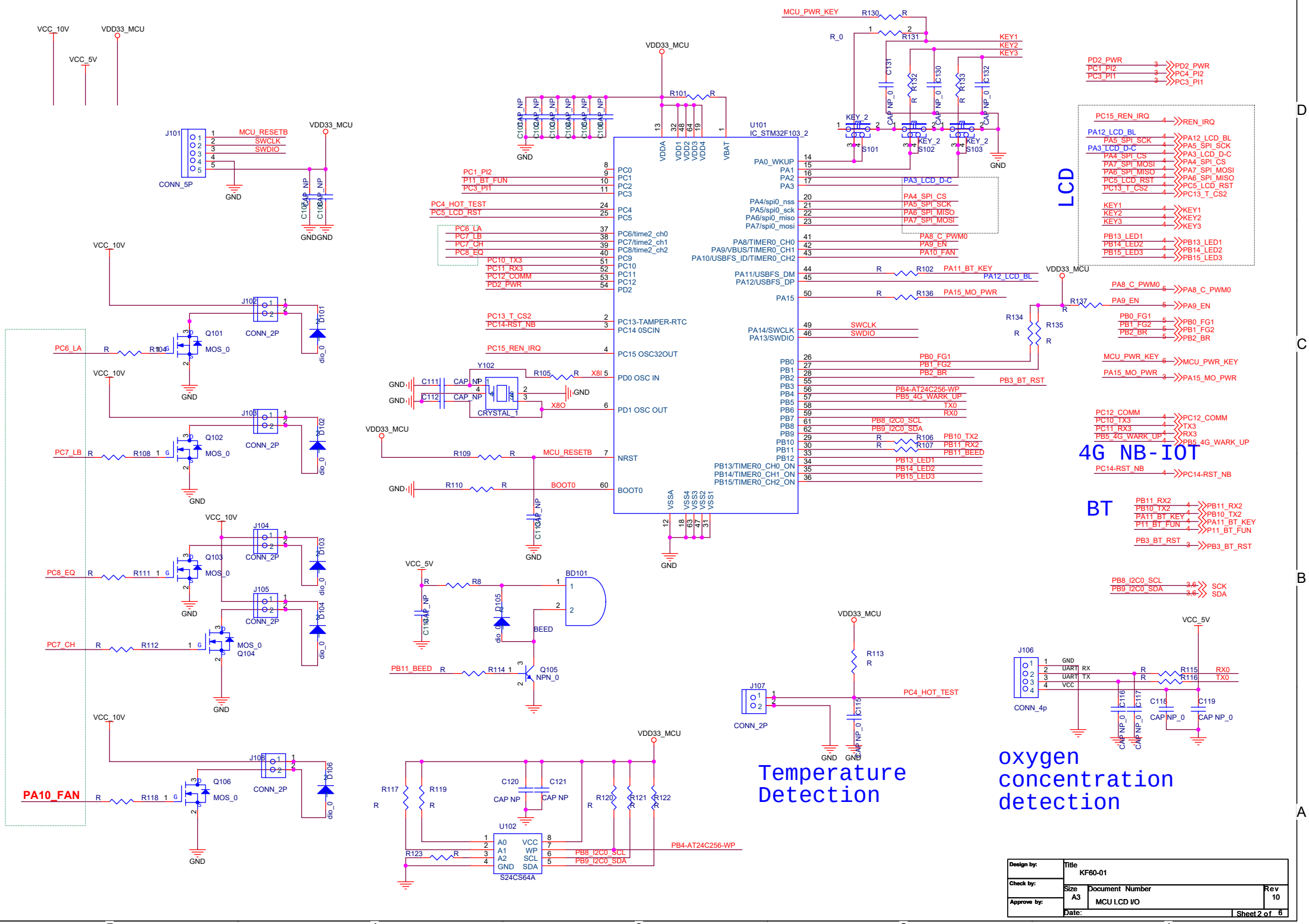
VCC_10V
VDD33_MCU
VCC_5V
J101
CONN_5P
MCU_RESETB
SWCLK
SWDIO
GND
U101
IC_STM32F103_2
LCD
4G NB-IOT
BT
Temperature Detection
oxygen concentration detection
PA10_FAN
J106
CONN_4p
J107
CONN_2P
S24CS64A
CRYSTAL_1
BD101
Q105
NPN_0
Q101
Q102
Q103
Q104
Q106
MOS_0
CONN_2P
Design by:
Check by:
Approve by:
Title
KF60-01
Size
A3
Document Number
MCU LCD I/O
Rev
10
Date:
Sheet 2 of 6

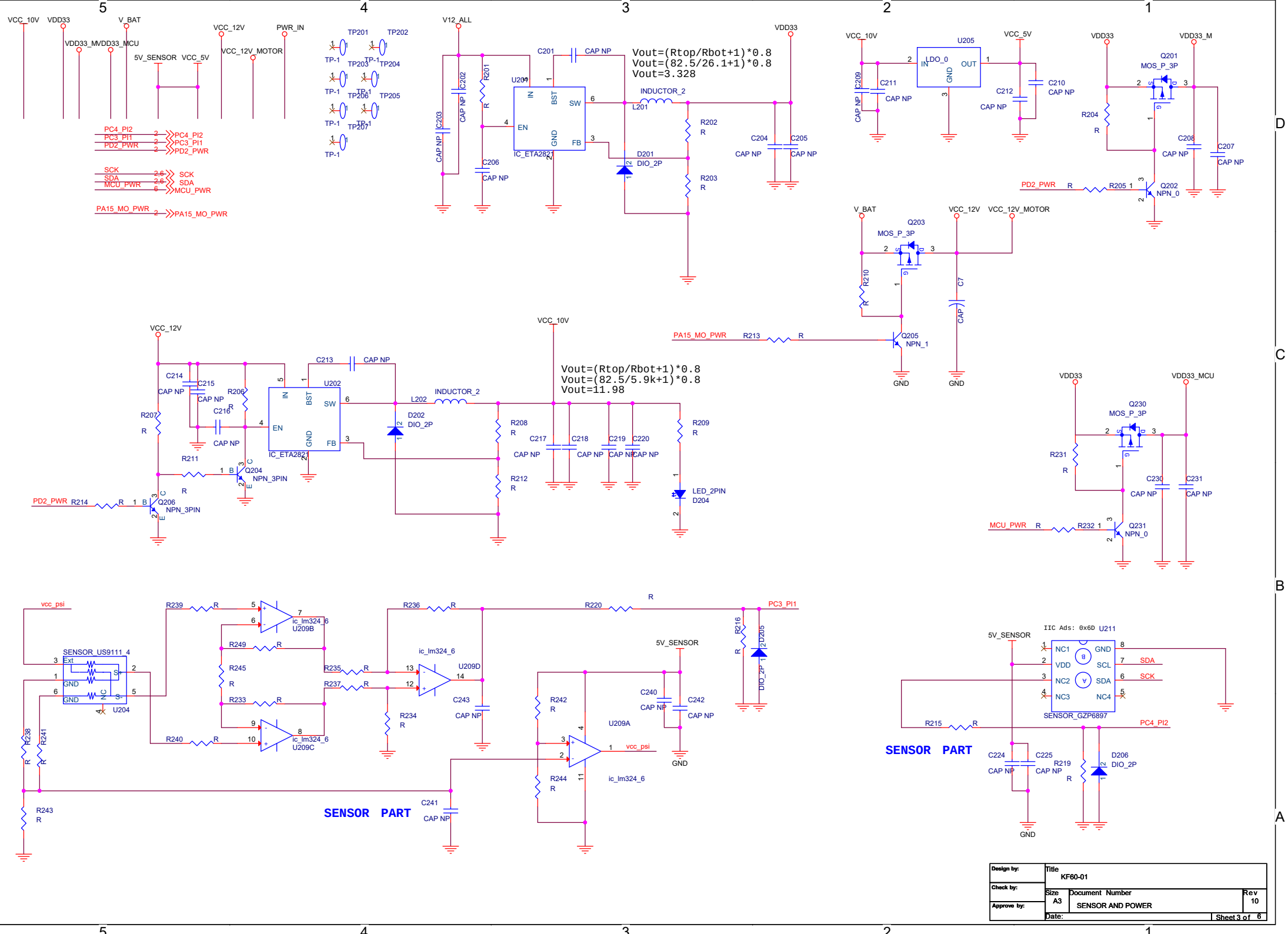
VCC_10V
VDD33
V_BAT
VDD33_M
VDD33_MCU
5V_SENSOR
VCC_5V
VCC_12V
VCC_12V_MOTOR
PWR_IN
TP201
TP202
TP203
TP204
TP205
TP206
TP207
TP-1
PC4_PI2
PC3_PI1
PD2_PWR
SCK
SDA
MCU_PWR
PA15_MO_PWR
V12_ALL
C201
CAP NP
Vout=(Rtop/Rbot+1)*0.8
Vout=(82.5/26.1+1)*0.8
Vout=3.328
U201
IC_ETA2821
INDUCTOR_2
L201
D201
DIO_2P
R201
R202
R203
R204
R205
R206
R207
R208
R209
R210
R211
R212
R213
R214
R215
R216
R219
R220
R231
R232
R234
R235
R236
R237
R239
R240
R241
R242
R243
R244
R245
R249
R233
R238
C202
C203
C204
C205
C206
C207
C208
C209
C210
C211
C212
C213
C214
C215
C216
C217
C218
C219
C220
C230
C231
C240
C241
C242
C243
C7
U205
LDO_0
IN
OUT
GND
Q201
MOS_P_3P
Q202
NPN_0
Q203
Q204
NPN_3PIN
Q205
NPN_1
Q206
U202
L202
D202
Q230
Q231
LED_2PIN
D204
Vout=(Rtop/Rbot+1)*0.8
Vout=(82.5/5.9k+1)*0.8
Vout=11.98
vcc_psi
SENSOR_US9111_4
U204
ic_lm324_6
U209B
U209C
U209D
U209A
D205
PC3_PI1
IIC Ads: 0x6D
U211
NC1
VDD
NC2
NC3
GND
SCL
SDA
NC4
SENSOR_GZP6897
PC4_PI2
D206
SENSOR PART
SENSOR PART
Design by:
Check by:
Approve by:
Title
KF60-01
Size
A3
Document Number
SENSOR AND POWER
Rev
10
Date:
Sheet 3 of 6

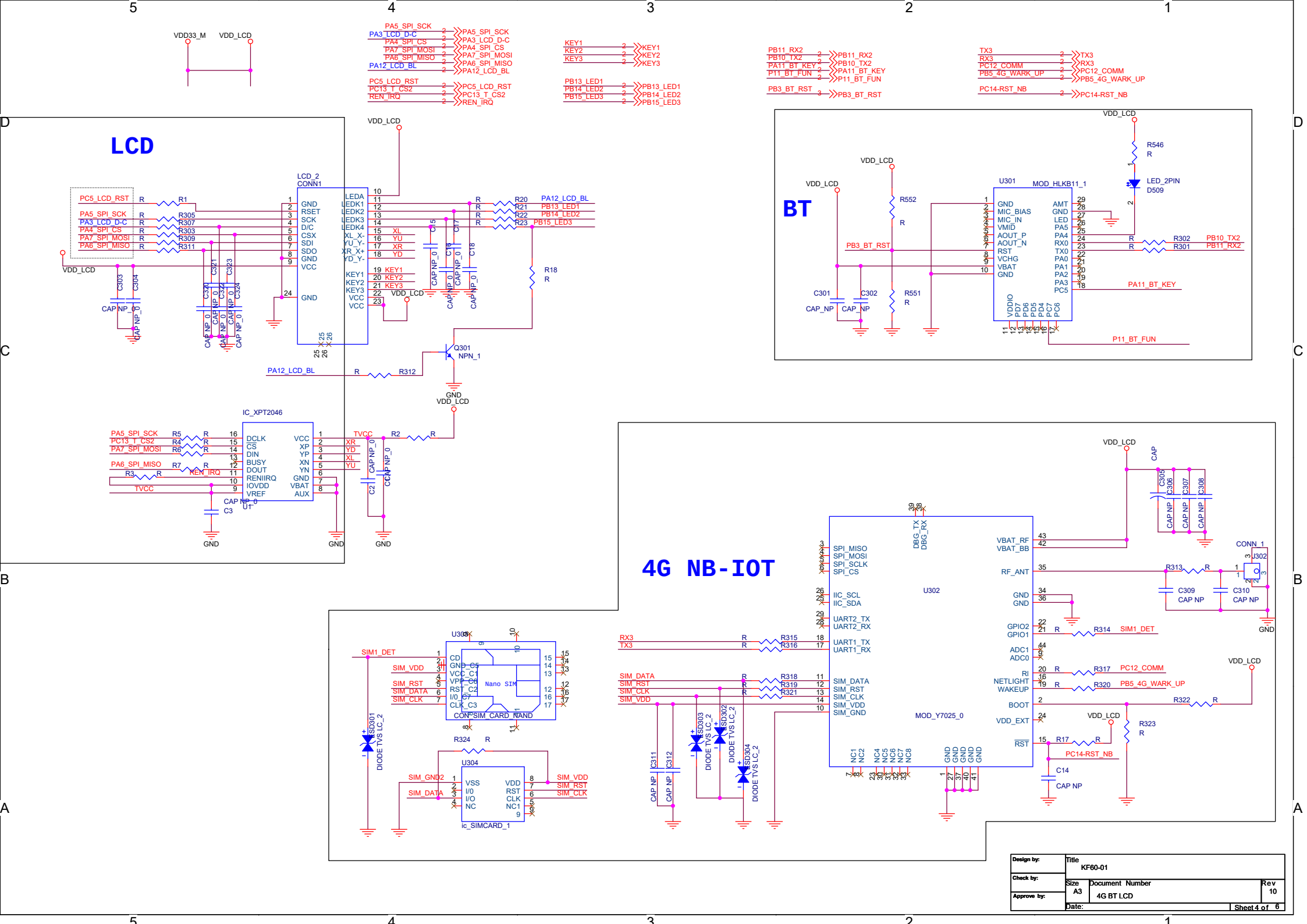
LCD
BT
4G NB-IOT
LCD_2
CONN1
IC_XPT2046
U1
Q301
NPN_1
U301
MOD_HLKB11_1
U302
MOD_Y7025_0
CONN_1
U303
CON_SIM_CARD_NAND
Nano SIM
U304
ic_SIMCARD_1
VDD33_M
VDD_LCD
PA5_SPI_SCK
PA3_LCD_D-C
PA4_SPI_CS
PA7_SPI_MOSI
PA6_SPI_MISO
PA12_LCD_BL
PC5_LCD_RST
PC13_T_CS2
REN_IRQ
KEY1
KEY2
KEY3
PB13_LED1
PB14_LED2
PB15_LED3
PB11_RX2
PB10_TX2
PA11_BT_KEY
P11_BT_FUN
PB3_BT_RST
TX3
RX3
PC12_COMM
PB5_4G_WARK_UP
PC14-RST_NB
SIM1_DET
SIM_VDD
SIM_RST
SIM_DATA
SIM_CLK
SIM_GND2
TVCC
GND
Design by:
Check by:
Approve by:
Title
KF60-01
Size
A3
Document Number
4G BT LCD
Rev
10
Date:
Sheet 4 of 6

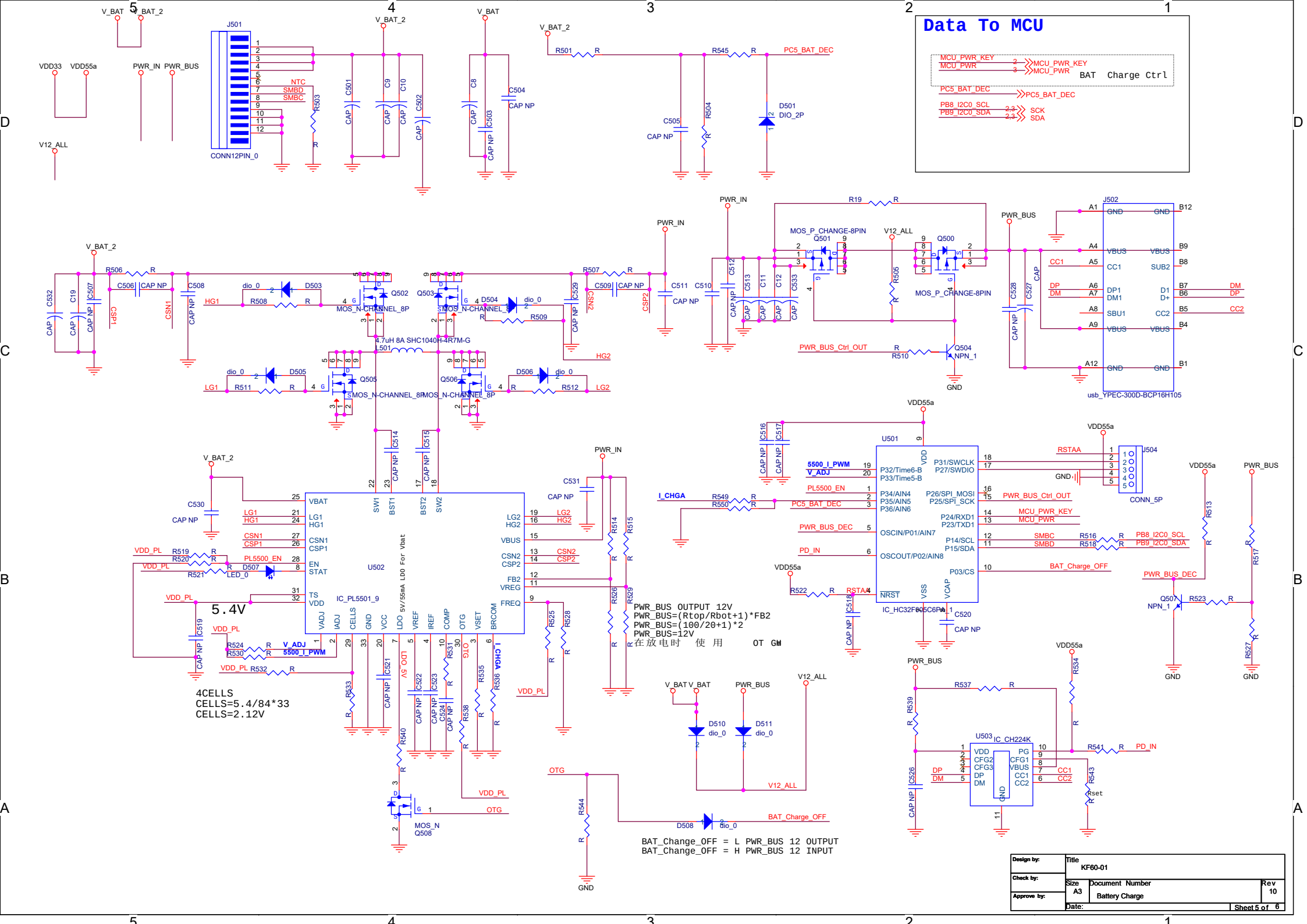
Data To MCU
MCU_PWR_KEY
MCU_PWR
BAT Charge Ctrl
PC5_BAT_DEC
PB8_I2C0_SCL
PB9_I2C0_SDA
SCK
SDA
J501
CONN12PIN_0
NTC
SMBD
SMBC
J502
usb_YPEC-300D-BCP16H105
U501
IC_HC32F005C6PA
U502
IC_PL5501_9
U503
IC_CH224K
J504
CONN_5P
Q501
MOS_P_CHANGE-8PIN
Q500
Q502
Q503
Q505
Q506
MOS_N-CHANNEL_8P
L501
4.7uH 8A SHC1040H-4R7M-G
Q504
NPN_1
Q507
Q508
MOS_N
D501
DIO_2P
D510
D511
D508
dio_0
5.4V
4CELLS
CELLS=5.4/84*33
CELLS=2.12V
PWR_BUS OUTPUT 12V
PWR_BUS=(Rtop/Rbot+1)*FB2
PWR_BUS=(100/20+1)*2
PWR_BUS=12V
在放电时 使 用
BAT_Change_OFF = L PWR_BUS 12 OUTPUT
BAT_Change_OFF = H PWR_BUS 12 INPUT
Design by:
Check by:
Approve by:
Title
KF60-01
Size
A3
Document Number
Battery Charge
Rev
10
Date:
Sheet 5 of 6

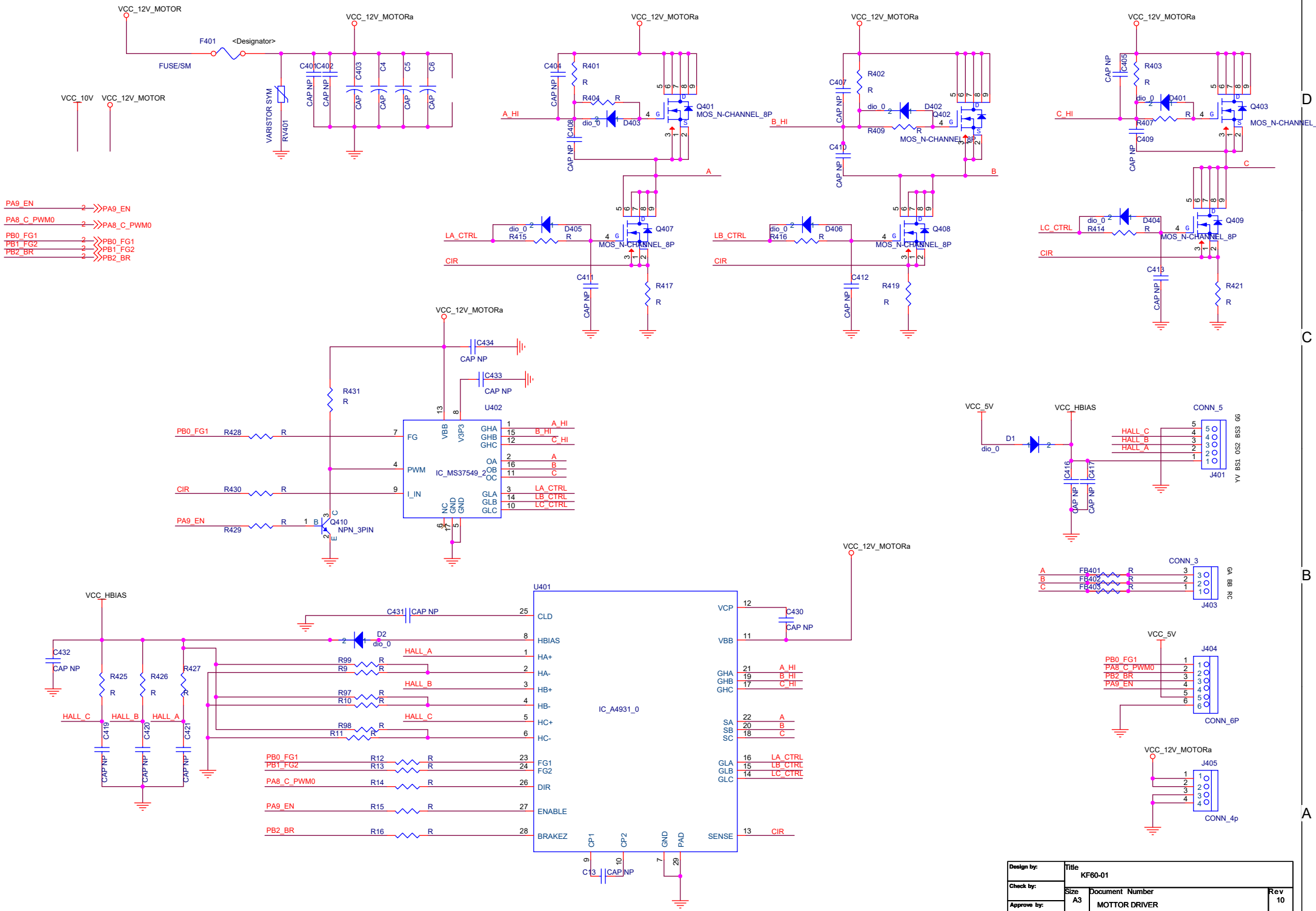
VCC_12V_MOTOR
F401
<Designator>
FUSE/SM
VCC_12V_MOTORa
VCC_10V
VCC_12V_MOTOR
VARISTOR SYM
RV401
C401 C402 C403 C4 C5 C6
CAP NP
CAP
Q401
MOS_N-CHANNEL_8P
Q402
Q403
Q407
Q408
Q409
D401
D402
D403
D404
D405
D406
dio_0
A_HI
B_HI
C_HI
LA_CTRL
LB_CTRL
LC_CTRL
CIR
PA9_EN
PA8_C_PWM0
PB0_FG1
PB1_FG2
PB2_BR
U402
IC_MS37549_2
FG
PWM
I_IN
VBB
V3P3
GHA
GHB
GHC
OA
OB
OC
GLA
GLB
GLC
NC
GND
Q410
NPN_3PIN
VCC_5V
VCC_HBIAS
D1
CONN_5
J401
HALL_C
HALL_B
HALL_A
CONN_3
J403
FB401
FB402
FB403
U401
IC_A4931_0
CLD
HBIAS
HA+
HA-
HB+
HB-
HC+
HC-
FG1
FG2
DIR
ENABLE
BRAKEZ
VCP
VBB
SA
SB
SC
SENSE
CP1
CP2
PAD
D2
J404
CONN_6P
J405
CONN_4p
Design by:
Check by:
Approve by:
Title
KF60-01
Size
A3
Document Number
MOTTOR DRIVER
Rev
10
Date:
Sheet 5 of 6