SPACE

Appendix B
Patriot System Equipment

This appendix provides an overview of the Patriot system, describing how the system and its major items accomplish the mission. It also provides a physical description of the major end items, including support equipment organic to the battalion. Finally, it provides the weights and dimensions of all tactical equipment.

SYSTEM OVERVIEW

B-1. Patriot is a guided missile system designed to defeat the future air and missile threat, which includes theater missiles (TBMs, ASMs, CMs), fixed and rotary wing aircraft and UAVs. The system normally fights as a battalion, which usually consists of five batteries or fire units (FUs) operating under the control of a fire direction center (FDC). However, there are some battalions that currently have six batteries due to theater and type of mission. See Figure B-1 for Patriot system overview.

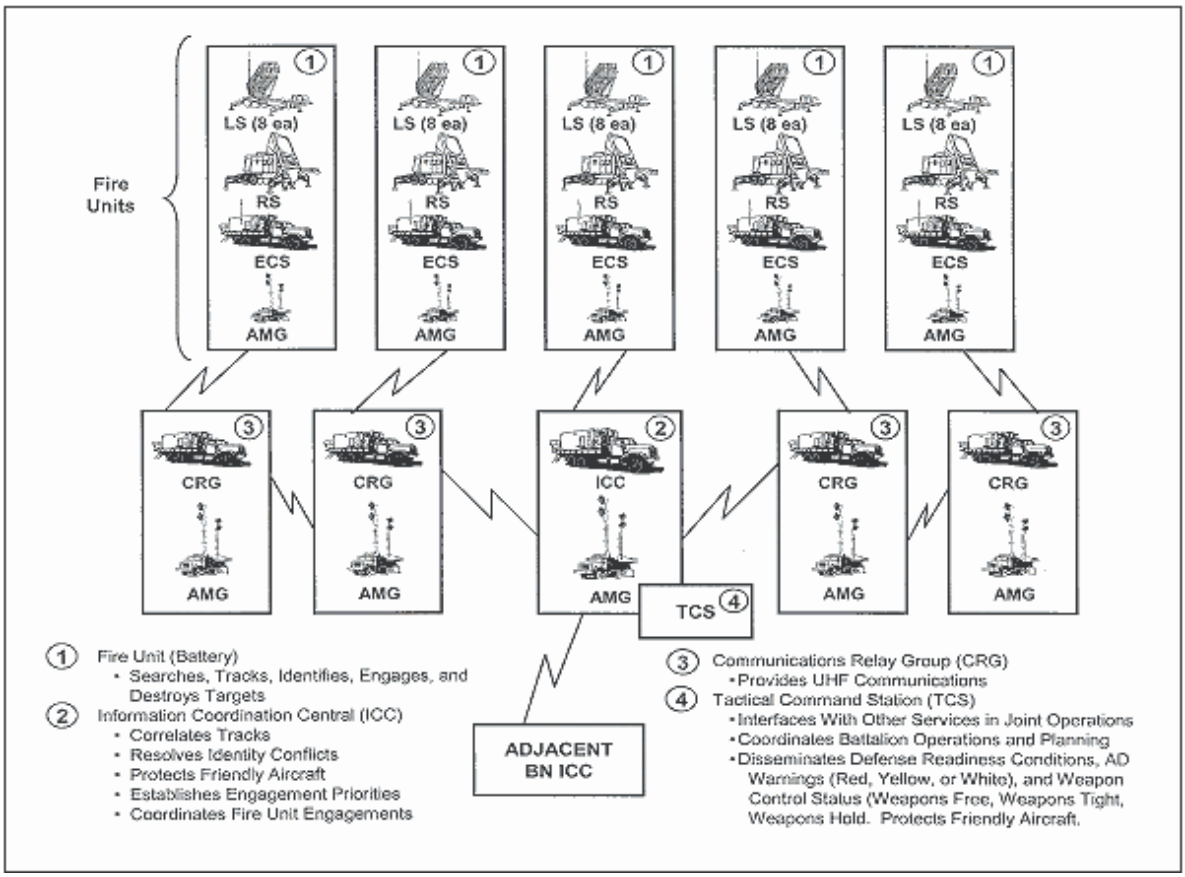

Figure B-1. Patriot System Overview

B-2. Each FU consists of an engagement control station (ECS), a radar station (RS), eight launching stations (LSs), an antenna mast group (AMG), EPP, and support equipment. The ECS is the operational control center for the FU and is manned by three crews of three operator personnel each (TCO, TCA, and communications operator). It contains the weapon control computer, man-machine interfaces, and various data and communications terminals used to accomplish FU functions. The ECS is linked with the RS via cable and with the LS via VHF or fiber optic communications links. The ECS is also linked with the ICC via the AMG, a mobile antenna mast system used to support UHF communications.

B-3. During operations, the ECS receives detection and tracking data from the RS and determines target classification and identity. Tracking and engagement operations information from each FU is sent to the ICC, which establishes and maintains a correlated air picture for the battalion. If the target is determined to be hostile and eligible for engagement, operator personnel in the ECS initiate the engagement, which results in the launch of a missile from the LS. The missile is command guided by the RS to a point just prior to intercept, then acquires and destroys the

target.

B-4. The ICC is the operational control center for the battalion and is manned by three operator personnel. The three operator personnel include the TD, TDA, and the communications operator. It contains the computers, man-machine interfaces, and various data and communications terminals used to accomplish the battalion's engagement operations functions. The ICC is linked to the FUs via UHF communications links. The communication relay groups (CRGs) serve as communications relays between the ICC and FUs, allowing the exchange of engagement operations data during the battle. The ICC is responsible for controlling and coordinating the engagement operations activities of the FUs. This includes correlating tracks, establishing engagement priorities, resolving identity conflicts, and ensuring friendly aircraft are not inadvertently engaged. It also disseminates initialization data to the FUs, ensuring they are properly initialized and configured for engagement operations.

B-5. The crew of the tactical command system (TCS) is responsible for performing deployment planning, defense planning, and other force operations activities in support of battalion operations. The TCS crew disseminates defense readiness conditions, defense warnings, and weapon control status throughout the battalion. They also disseminate initialization data to the ICC, to assist the ICC in proper database initialization and preparation for engagement operations. A crew consisting of three 14J EWS operators is required to operate the TCS. At least three crews must be available for continuous, 24-hour operations. A 24-hour operation is necessary to ensure continuous coordination is done with the ICC.

B-6. Two support items not shown in the figures are the electric power plants (EPPs) and electric power units (EPUs). The EPP III is the prime power source for the ECS and RS, and consists of two 150-kw generators mounted on a 10-ton HEMTT. The EPU is the prime power source for the ICC and CRGs. Each ICC and CRG has an EPU, which consists of a 30-kw generator mounted on a PU 789M trailer.

B-7. The Patriot battalion also has several other items of support equipment not shown in the figure. These items include the maintenance center (MC), the small repair parts transporter (SRPT), the large repair parts transporter (LRPT), and the guided missile transporter (GMT)—

- The MC is a semi-trailer-mounted shop that contains the tools, handling equipment, and test equipment necessary to maintain the Patriot tactical equipment.
- The SRPT is a semi-trailer-mounted shop used in the FU for storing and transporting small repair parts.
- The LRPT is a HEMTT M977 cargo truck with a light duty material-handling crane. It is used to store and transport large, heavy repair parts.
- The GMT is a modified HEMTT M985 with a heavy-duty crane attached at the rear of the vehicle. It can be used for the delivery, recovery, and loading of guided missiles. It is on the HHB TOE. Whether the GMT remains at the battery or is retained at the battalion (S4) during combat or other operations is determined by how missiles will be resupplied to the battalion.

PHYSICAL DESCRIPTION OF MAJOR ITEMS

B-8. Physical descriptions of the major end items are provided below. More detailed descriptions of these items, their components, and subsystems can be found in the system technical manuals.

INFORMATION AND COORDINATION CENTRAL

B-9. The ICC consists of a lightweight weather tight shelter mounted on a 5-ton cargo truck, see Figure B-2 for illustration. The shelter provides shielding from radio frequency interference (RFI) and electromagnetic pulse (EMP) radiation. It is equipped with two externally mounted air conditioners that cool, heat, and ventilate the interior. An externally mounted gas particulate filter unit (GPFU) is used in NBC situations to provide clean air for crewmembers.

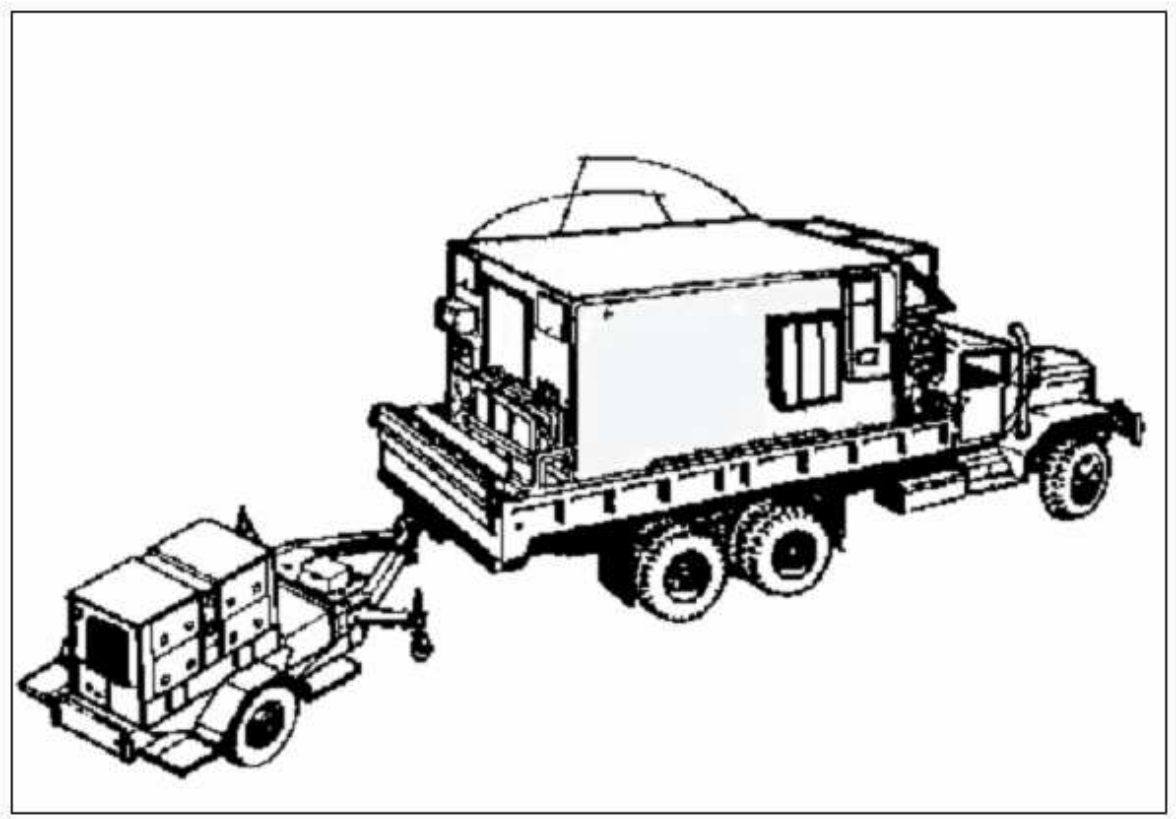

Figure B-2. Information and Coordination Central With EPU

B-10. The ICC contains two consoles that are manned by the tactical director (TD) and tactical director assistant (TDA), that are used to execute engagement operations, and a communications workstation manned by a network switch operator. At least three crews of three personnel each must be available for continuous 24-hour operations. Between the two consoles is an ICC status panel that displays the status of all battalion fire units (FU).

TACTICAL COMMAND SYSTEM WITH AIR AND MISSILE DEFENSE WORKSTATION

B-11. The tactical command system (TCS) is a 5-ton truck mounted expandable shelter shown in Figure B-3 that is a highly mobile all-weather facility emplaced near the battalion ICC. The TCS can be operational while parked at a 10-degree angle from horizontal. It exchanges data with the ICC as well as provides voice communications. It provides the Patriot air defense battalion commander with state-of-the art equipment to implement and coordinate tactical planning and management activities. It is a facility, which accommodates the commander and staff personnel and provides automated equipment to support force operation tasks that develop defense design planning. At least three crews with three personnel each must be available for continuous, 24- hour operations.

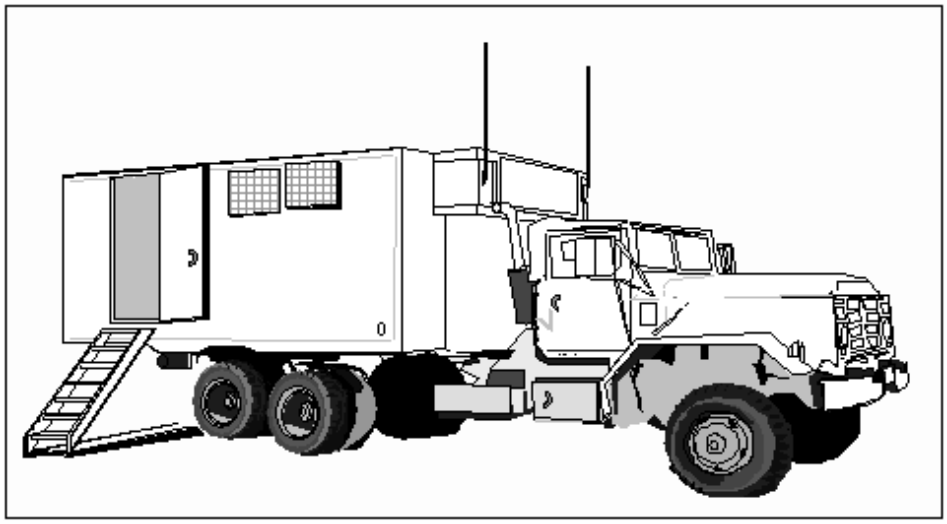

Figure B-3. Tactical Command System

B-12. The TCS has active software programs that help planners translate airspace control measures (ACM) for the battalion into Patriot initialization data. The TCS consists of an air and missile defense workstation (AMDWS), and tactical planner workstation (TPW). It can display real time data based on operator selections. The TPWs capabilities include but are not limited to—

- Map display and control.
- Tactical overlays.
- Air situation.
- Deployment planning.
- Battle situation monitoring.
- Send initialization data to the ICC.

B-13. AMDWS is the primary tool for monitoring and managing air and missile defense (AMD) operations. AMDWS maintains a comprehensive database of the tactical situation and also provides mission-planning capabilities to overlay air defense coverage, weapons coverage, airspace control measures, threat locations and planned unit positions. It is used by S1/S4 to manage personnel and logistics functions. It provides an automated rollup for submitting personnel reports, unit reports, and daily summaries. Some of the capabilities include but are not limited to—

- Send and receive messages and defense plans.
- Maintain personnel and logistics databases.
- Develop and run airbattle scenario.
- Maintain situation awareness of the hostile air threat.
- Provide data required for air intelligence preparation of the battlefield (IPB).
- Maintain situation awareness during ongoing air defense operations.
- Monitor personnel and logistical status.
- Provide for the interface and data exchange between the TCS and other elements of the ABCS.
- Defense design planning.

COMMUNICATIONS RELAY GROUP

B-14. The CRG consists of a weather tight NBC proof shelter attached to a 5-ton cargo truck shown in Figure B-4. It is similar in appearance to the ECS. It provides a multi-routed secure, two-way data relay capability between the ICC, its assigned fire units, and between adjacent units. The CRG operates as an LCS, which is critical for remote launch phase-3 operations. The CRG also provides the capability for both data and voice exit and entry communication points with elements that are external to Patriot. A 24-hour continuous operation is needed to meet mission requirements.

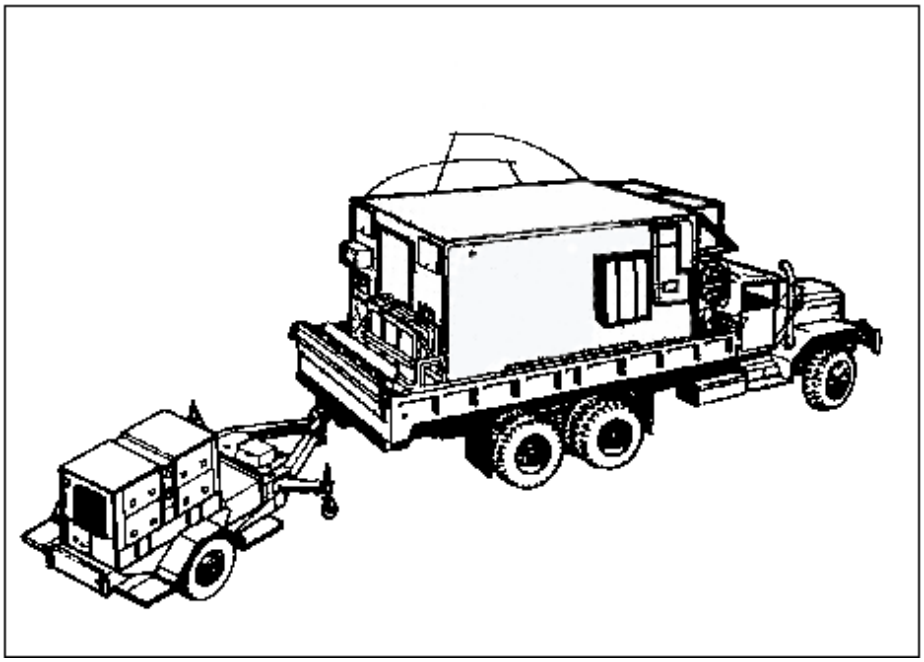

Figure B-4. Communications Relay Group with EPU

ENGAGEMENT CONTROL STATION

B-15. The ECS consists of a lightweight weather tight shelter mounted on a 5-ton cargo truck shown in Figure B-5. The shelter provides shielding from RFI and EMP, and like the ICC, is equipped with two externally mounted air conditioners and a GPFU. The left side as seen from the doorway includes three UHF RRTs and a voice communications station. The right side includes the very high frequency (VHF) data link terminal (DLT), radar weapon control interface unit (RWCIU), WCC, an AN/VRC-92A SINCGARS radio, optical disc drives (ODD), and embedded data recorder. The ECS crew consists of a TCA, TCO and communications personnel. Three crews of three personnel each are responsible for running 24-hour continuous operations.

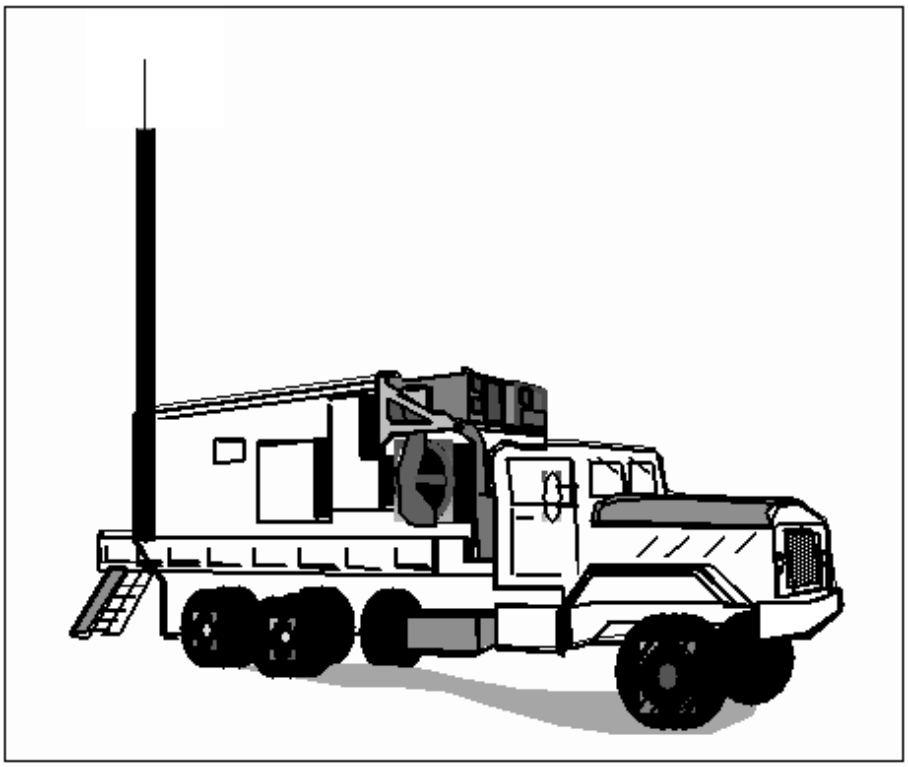

Figure B-5. Engagement Control Station

BATTERY COMMAND POST

B-16. New technology is now being integrated for the battery command post (BCP). The new Patriot battery command post provides shelterized communications, computer and display facilities, as well as working space for the battery commander and his staff, see Figure B-6. BCP equipment includes a high mobility, multi-purpose, wheeled vehicle (HMMWV), with a deployable rapid assembly shelter (DRASH) modular tent, which attaches to the backside of the vehicle.

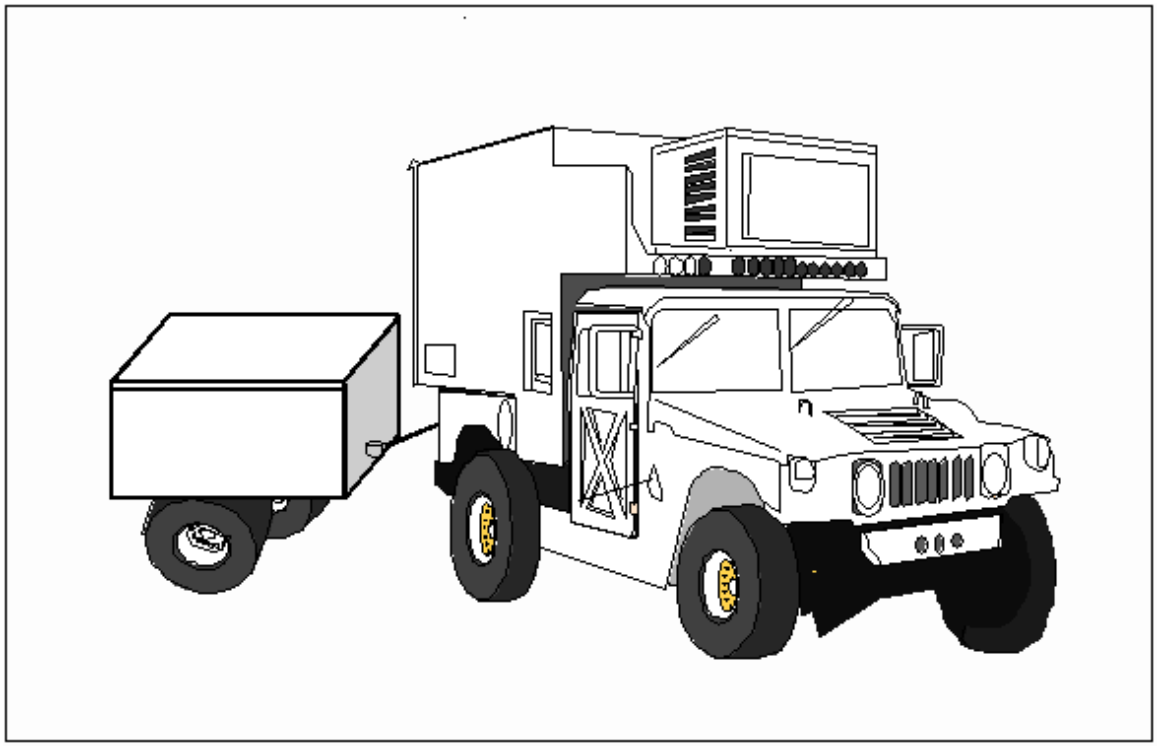

Figure B-6. Battery Command Post With Trailer

B-17. Within the vehicle there is an AMDWS station and a common hardware software (CHS) computer with an attached 8mm tape drive and printer. The battery CP is run off a 10-kw generator. Battery CPs has dedicated elements to implement emergency survivability measures in case of chemical or ground attacks.

B-18. The BCP is operated by a crew of two 14J EWS operators. At least three crews must be available for continuous, 24-hour operations. The crewmembers are responsible for operating, maintaining, march ordering and emplacing the Battery CP. Personnel required to support battery CP operations will be early warning system (EWS) operators capable of operating the AMDWS system. Some of the new BCP functions will include—

- Receive TADIL-J and display on battery CP workstation.
- Situation awareness and early warning.
- Automated defense design and planning.
- AMDWS functionality/routing staff support.
- FMS-D functionality.
- Integrated scenario development.
- AMDWS/TAC planner capabilities to support defense planning and air battles.
- Told in intelligence received and processed.

RADAR SET

B-19. The RS consists of a multifunction phased array radar mounted on an M-860 semi-trailer towed by an M983,

heavy expanded mobility tactical truck (HEMTT), see Figure B-7. It is monitored and controlled by the ECS via the radar and weapon control interface unit. The RS performs very low to very high altitude surveillance, target detection, target classification, target identification, target track, missile track, missile guidance, and ECCM functions.

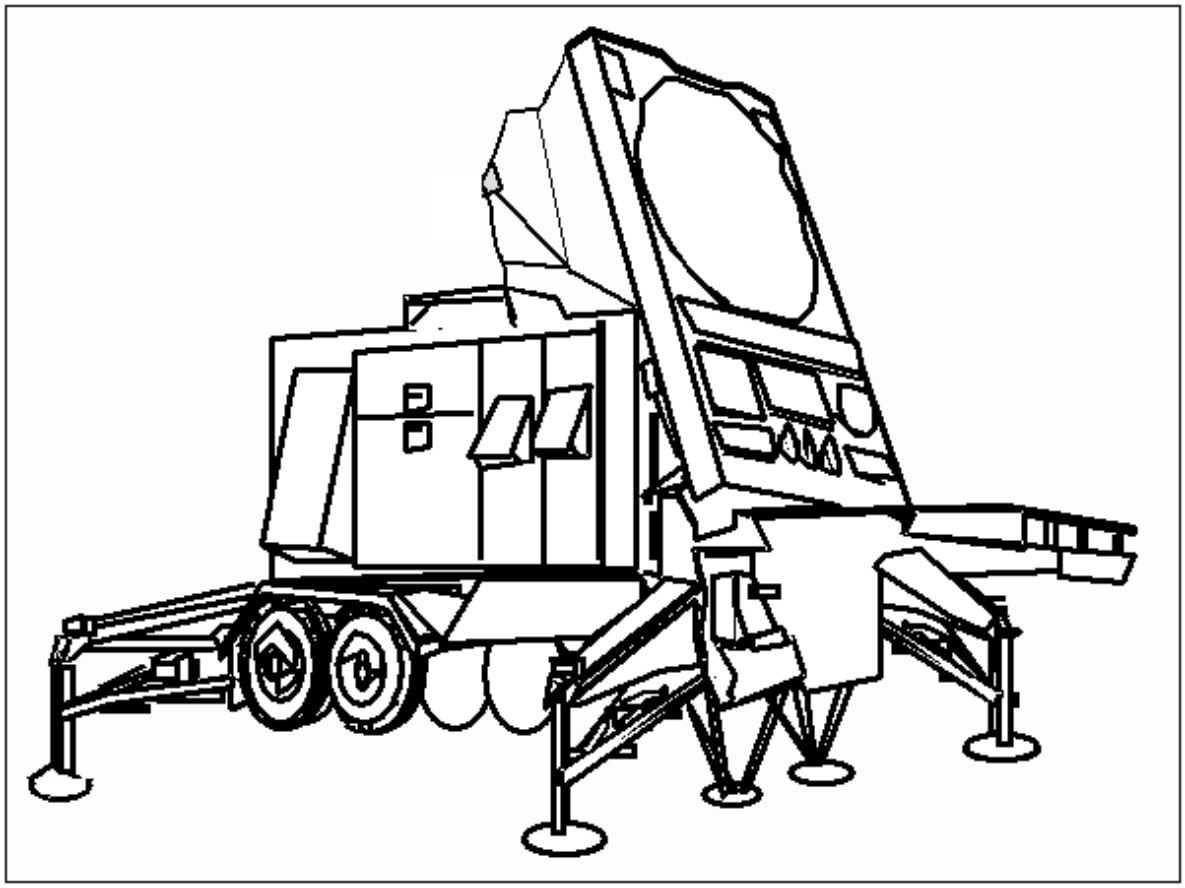

Figure B-7. Radar Set

B-20. Radar antenna is positioned at the forward end of the shelter and is erected to a fixed 67.5° angle relative to the horizontal plane during emplacement. Integral leveling equipment on the M860 semi-trailer permits emplacement on slopes of up to 10 degrees.

PAC 3 AN/MPQ-65 RADAR

B-21. The PAC-3 AN/MPQ-65 is the radar with the new enhancements that will provide significant improvements in expanded search, threat detection, and identification and engagement capability. In addition, the radar search sector volume has been expanded and a search-tailoring feature has been incorporated. Configuration-3 radar enhancements provide for additional search sectors that improve search and track functions against TBM threats. The addition of the high altitude cruise missile (HACM) search sector enhances the system's ability to detect and counter air-launch cruise missiles (CMs).

LAUNCHING STATION

B-22. Launching stations (LS) shown in Figure B-8 are a remotely operated, fully self-contained unit, that has integral onboard power and carries up to four PAC-2 or GEM missiles, or 16 PAC-3 missiles. PAC-2 and GEM missiles may be mixed together on the LS. PAC-3 cannot be mixed with any other type of missiles due to their size. Operation is controlled in the ECS via fiber optics or VHF data link. The LS is mounted on an M-860 semi-trailer towed by an M983 HEMTT. Leveling equipment permits LS emplacement on slopes of up to 10°. The LS is trainable in azimuth ±110° and elevates to a fixed, elevated, launch position. The LS has to be precisely emplaced and aligned prior to launch. Proper emplacement and alignment is critical for engagement of any threat.

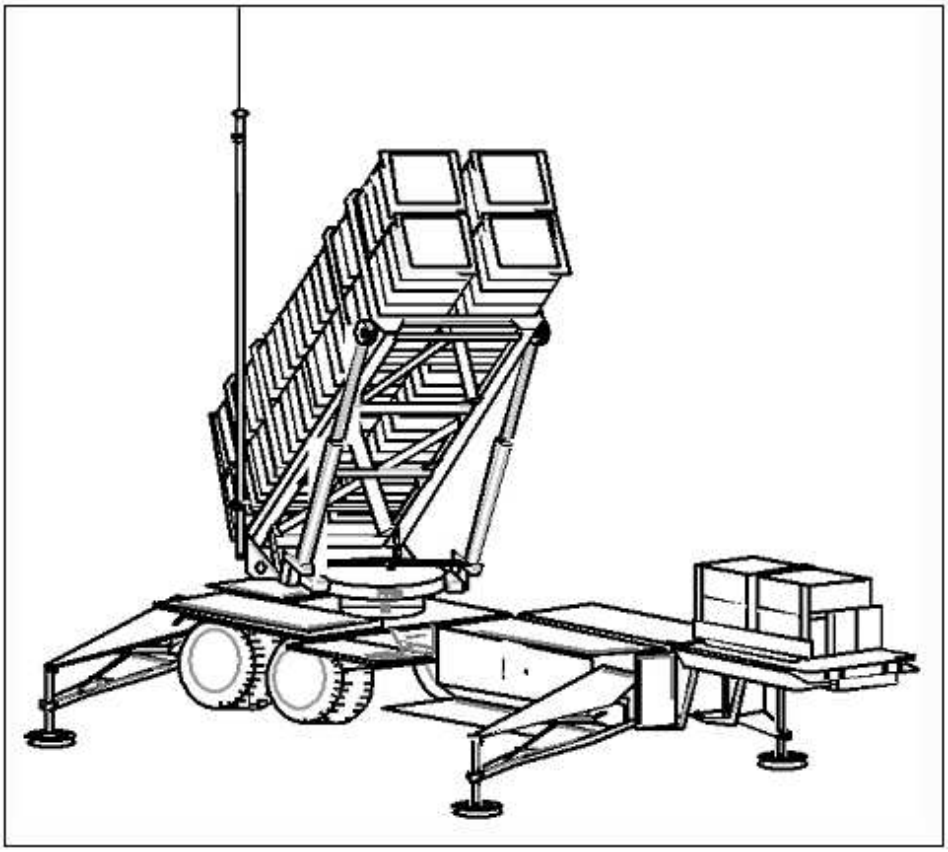

Figure B-8. PAC-2 Launching Station, Emplaced

B-23. The generator for the LS is located on the yoke assembly of the trailer and includes a built-in 56.8-liter (15-gallon) fuel tank. It has side-mounted work platforms. The unit is a diesel engine-driven generator, 15-kw, four-wire, 400-hertz, 120/208-volt power.

B-24. An M983 is the prime mover for the launching station. Each prime mover should include one radio per launcher. FM communications is required with the ECS and the battery command network during emplacement, missile reload, movement, and static operations.

PAC-3 LAUNCHER

B-25. The current Patriot launcher has been modified to accommodate the new PAC-3 missile and serves as an interchangeable launcher platform. The upgraded launcher is referred to as a PAC-3 launcher and is capable of accommodating the PAC-3 missile or the current inventory of Patriot missiles. A PAC-3 launcher is shown in Figure B-9.

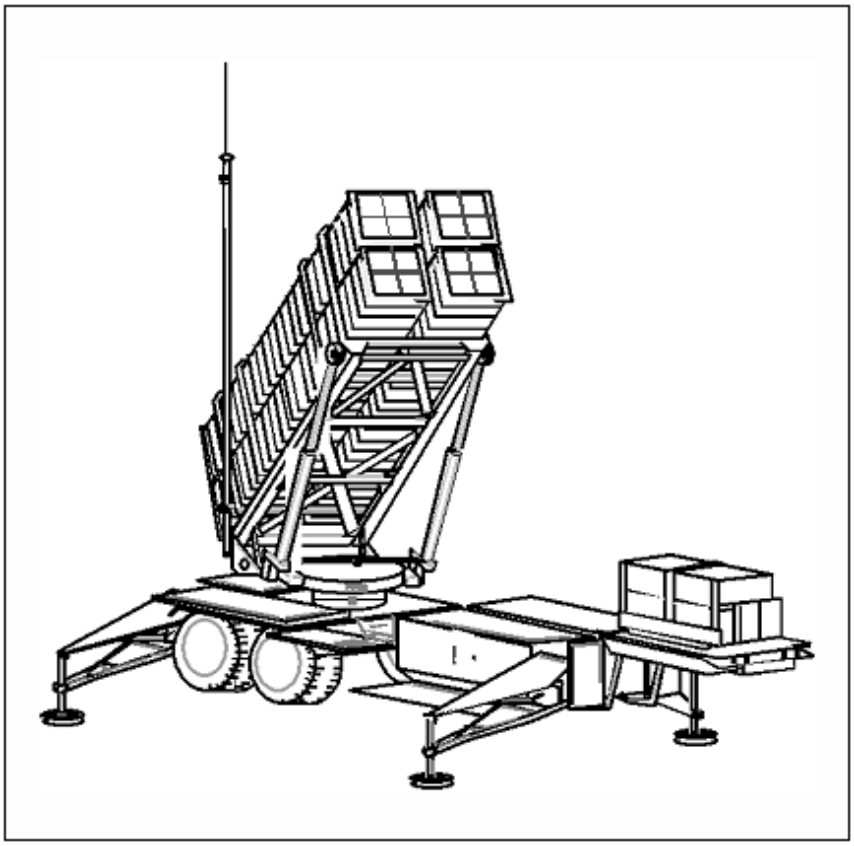

Figure B-9. PAC-3 Launching Station Emplaced

B-26. Each PAC-3 launcher will include the enhanced launcher electronics system (ELES), a junction box containing a Launching Station Diagnostic Unit (LSDU), and new interface and umbilical cables for the PAC-3 missile. The ELES performs the electrical interface functions between the PAC-3 launcher and the PAC-3 missiles to the ECS through the fiber optics cable or SINCGARS VHF radio. During operations, the ELES may be connected to 16 PAC-3 missiles or four PAC-2 missiles. The ELES is comprised of the launch control unit, motor control unit, power control unit, connector interface panel, and junction box (J-box). The J-box interfaces the ELES and missile canisters, either PAC-2 or PAC-3 missiles. There is no mixing of PAC-3 and PAC-2 missiles on the same launcher.

B-27. The ELES replaces the launcher electronics module (LEM) and occupies the same location on the launcher. The power distribution unit (PDU) internal to the LEM was replaced with a PCU (internal to the ELES) for control of additional power supplies required by the PAC-3 missile functions. The J-box replaces the launcher missile round distributor (LMRD) on PAC-3 launchers.

B-28. Since the PAC-3 launcher is capable of firing the PAC-3 missile or any standard PAC-2 Patriot missile (STD, SOJC, ATM, or GEM), the launcher must be loaded with all PAC-3 or any combination of PAC-2 missiles, there is no mixing of PAC-3 and PAC-2 missiles on the same launcher.

ELECTRIC POWER PLANT III

B-29. The electric power plant (EPP III) shown in Figure B-10 is the prime power source for the ECS and RS. Each EPP consists of two 150-kw, 400-Hz diesel engines that are interconnected through the power distribution unit (PDU) and are mounted on a 10-ton M977 HEMTT. Each EPP contains two interconnected 75-gallon fuel tanks and a fuel distribution assembly with grounding equipment. Each diesel engine can operate more than eight hours with a full fuel tank.

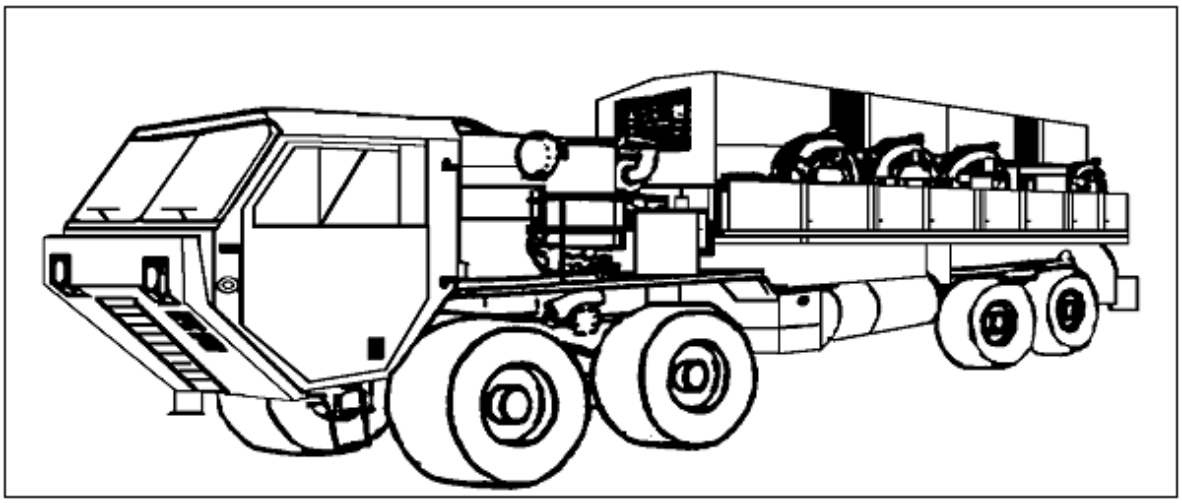

Figure B-10. Electric Power Plant III

ANTENNA MAST GROUP

B-30. The AMG as illustrated in Figure B-11 is a mobile antenna mast system used to carry the amplifiers and antennas associated with the UHF communications equipment located in the ECS, ICC, and CRG. Four antennas are mounted in two pairs, are remotely controlled in azimuth, and can be elevated to heights up to 100 feet, 11 inches, above ground level.

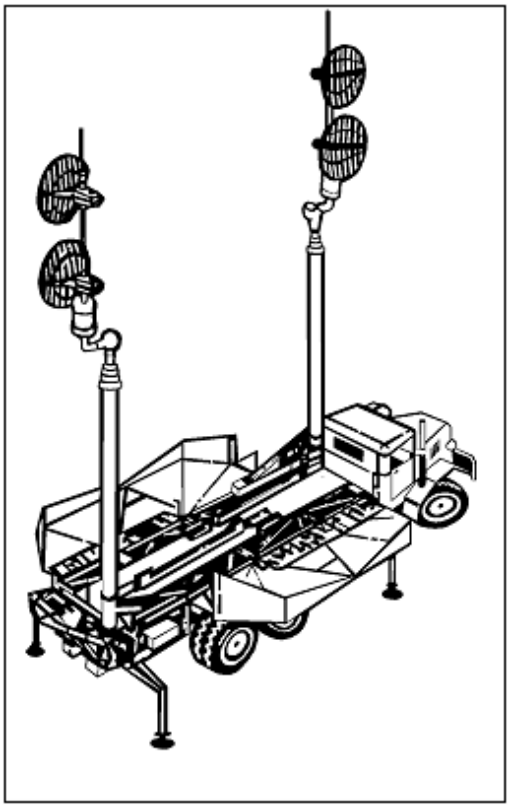

Figure B-11. Antenna Mast Group

B-31. Emplacement consists of stabilizing the AMG, setting the antenna feed, and the erection of the antennas by the use of self-contained hydraulic and pneumatic systems and then adjusting the antenna elevation. The emplacement slope for the AMG should not be more than 10 degrees for cross-roll and 1/2 degree for roll. Connecting cables to the collocated shelter is carried on the AMG and includes RF cables, control cables, and a prime power cable.

PATRIOT MISSILE

B-32. The Patriot missile is a certified round that requires no checkout prior to launch. It is shipped in a canister,

which also serves as a launching tube. There are several versions of Patriot missiles, each with different capabilities in Table B-1.

Table B-1. Patriot Missiles Dimensions and Weights

MISSILE VERSION	CAPABILITIES	DIMENSIONS AND WEIGHTS		
		LENGTH	DIAMETER	WEIGHT
STANDARD	▪ Basic Capability vs. Aircraft ▪ Limited Effectiveness/ Lethality vs. Scud-Class TBMs And SOJ ECM Threats	5.3 M	41 CM	914 KG
SOJC	▪ Improved Effectiveness Against SOJ ECM Threat	5.3 M	41 CM	914 KG
ATM (PAC-2)	▪ Improved TBM Capability	5.3 M	41 CM	914 KG
ATM-1 (GEM)	▪ Improved Acquisition, Guidance And Fusing ▪ Improved Pk Against Low RCS, High Speed TBMs ▪ Increased Defended Area And Lethality	5.3 M	41 CM	900 KG
ATM-2 (PAC-3)	▪ Improved Maneuverability ▪ Hit To Kill System ▪ Increased Firepower (16 Vs. 4) Missiles Per Launcher	5.2 M	25 CM	312 KG

B-33. The PAC-3 missile is considerably smaller than the other Patriot missiles, allowing 16 to be loaded on the launching station vice four of the others. Because the different versions have different capabilities and limitations, there are strict guidelines regarding their selection and use against different threats (see ST-44-85-3). See Figure B-12 for difference between missiles.

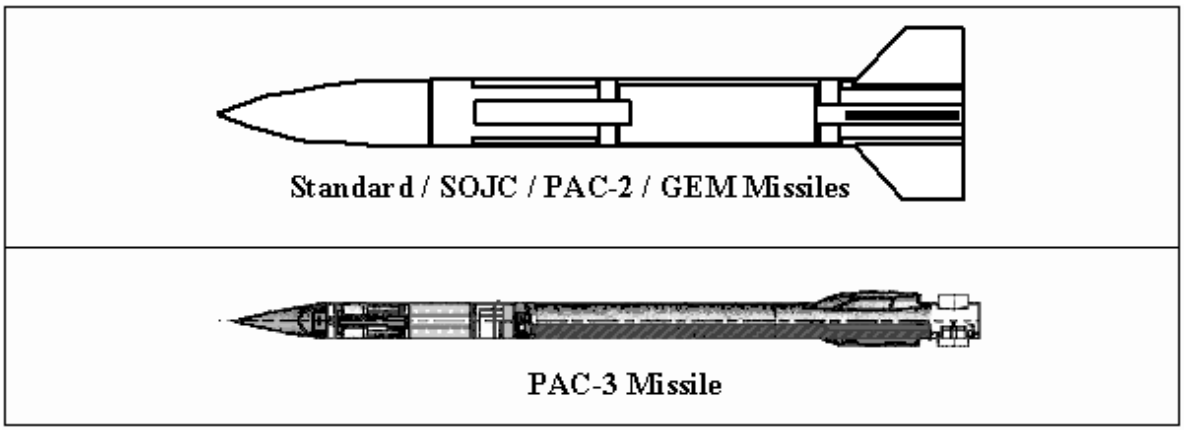

Figure B-12. Patriot Missiles

Patriot Support Equipment

B-34. Patriot support equipment consists of standard Army vehicles that have been modified and equipped for use with the Patriot system. They function as the maintenance and supply centers required for Patriot tactical equipment at the battery and battalion headquarters levels. Patriot support equipment is shown in Figure B-13. Repair parts, maintainer tools, test and handling equipment, publications, and maintenance and supply records are stored in the vehicles.

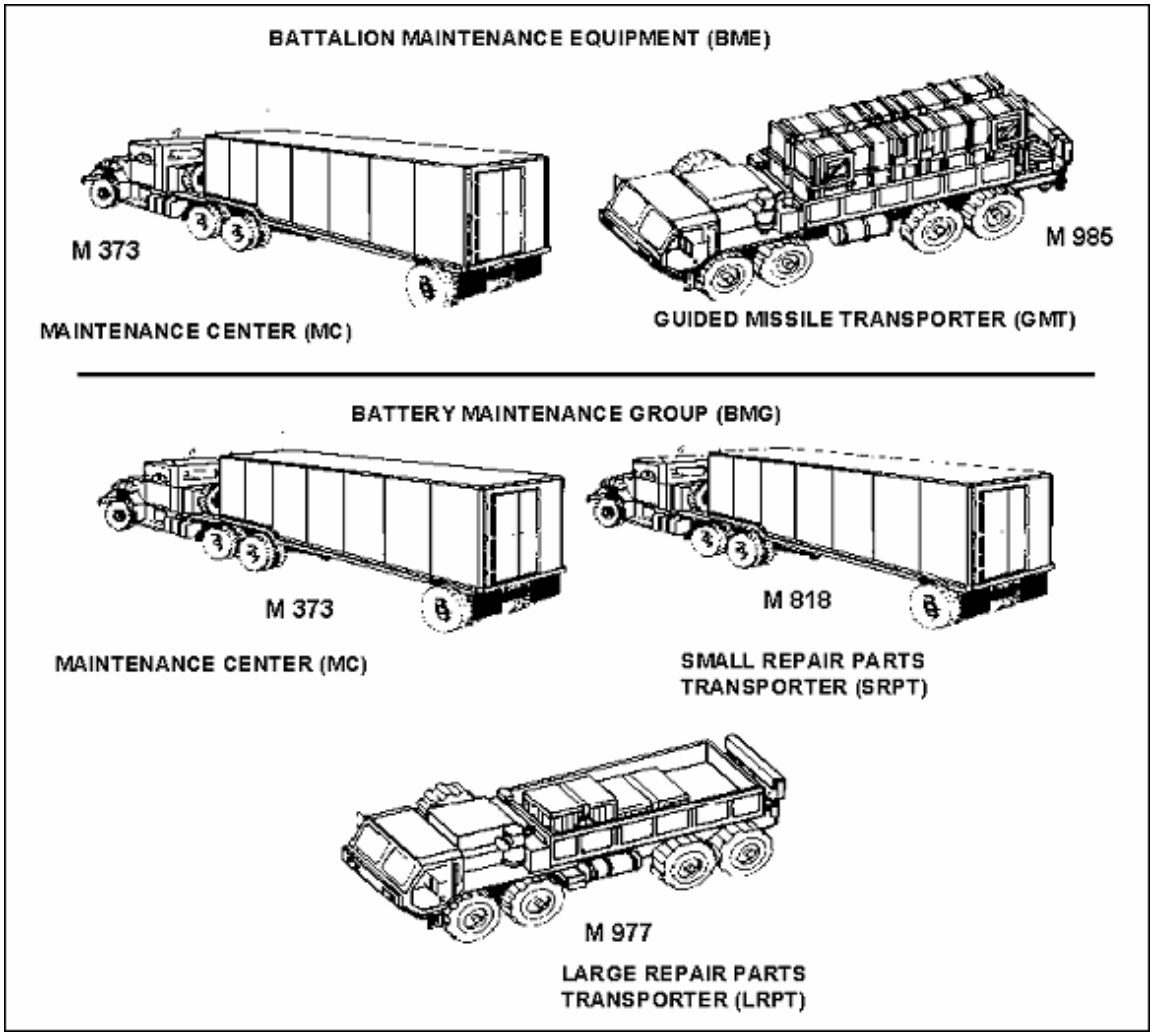

Figure B-13. Patriot Support Equipment

B-35. A maintenance center (MC) is a semi-trailer mounted shop van that contains the tools, test and handling equipment necessary to maintain the Patriot system. It is used at battery and battalion levels. The HHB MC has been configured to function as a small repair parts transporter (SRPT). Power is provided by a PU-732M 15-kw, 400-hz, diesel generator set, trailer mounted. It is towed by a separate vehicle and provides power for the maintenance center and SRPT.

B-36. A guided missile transporter (GMT) is a modified HEMTT M985. The GMT is used for delivery, recovery, loading, and reloading of Patriot missiles. A heavy-duty materiel-handling crane is attached at the rear of the vehicle.

B-37. A large repair parts transporter (LRPT) provides a means to transport and store large, heavy repair parts. It consists of a HEMTT M977 cargo truck with a heavy-duty materiel-handling crane.

B-38. A small repair parts transporter (SRPT) provides a means to transport small, repair parts, and assemblies. It is also used as a maintenance van when needed.

TACTICAL EQUIPMENT WEIGHTS AND DIMENSIONS

B-39. Table B-2 provides approximate weights and dimensions of tactical equipment in both English and metric systems. This table also includes the weight of water and fuel.

Table B-2. Patriot Equipment Weights and Dimensions

EQUIPMENT	MAXIMUM WEIGHT	MAXIMUM OVERALL DIMENSIONS

		HEIGHT	WIDTH	LENGTH
Radar Set w/ M983 - Prime Mover (AN/MPQ -53)	78,230 lb 35,485 kg	11.83 ft 3.61 m	9.52 ft 2.90 m	55.77 ft 17.00 m
Radar Set w/M983 - Prime Mover (AN/MPQ-65)	78,030 lb 35,485 kg	11.83 ft 3.61 m	9.52 ft 2.90 m	55.77 ft 17.00 m
Engagement Control Station mounted (AN/MSQ-104) w/M927 5-Ton Tractor Truck w/o Winch	37,780 lb 17,137 kg	11.92 ft 3.63 m	8.95 ft 2.73 m	32.10 ft 9.78 m
Electric Power Plant III mounted on M977 Tractor w/Winch	59,910 lb 27,174 kg	11.25 ft 3.43 m	8.5 ft 2.59 m	33.4 ft 10.18 m
Antenna Mast Group, OE-MRC w/M942, 5-Ton Tractor w/Winch	37,170 lb 16,860 kg	1.75 ft 3.58 m	8.26 ft 2.52 m	35.13 ft 10.71 m
Launcher Station, Guided Missile w/15-kw GEN, w/M983 Tractor and Trailer, No Missiles	67,010 lb 30,395 kg	11.50 ft 3.50 m	9.42 ft 2.87 m	55.96 ft 17.06 m
Launcher Station, Guided Missile, w/15-kw GEN w/M983 Tractor and Trailer w/4 GM (PAC-2) Missiles	82,010 lb 37,199 kg	13.08 ft 3.99 m	9.42 ft 2.87 m	55.96 ft 17.06 m
4 GM (PAC-2) w/Canisters, No Truck, No Trailer	15,000 lb 6,804 kg	6.50 ft 1.98 m	7.04 ft 2.15 m	20.0 ft 6.10 m
PAC-3 Launcher Trailer Set, w/o Prime Mover, w/15kw GEN, No Missiles	35,000 lb 15,876 kg	11.50 ft 3.50 m	9.42 ft 2.87 m	33.66 ft 10.26 m
4 GM (PAC-3) w/Canister, 16 Missiles Total, No Truck, No Trailer	18,552 lb 8,415 kg	6.50 ft 1.98 m	7.04 ft 2.15 m	20.0 ft 6.10 m
PAC-3 Launcher Station, w/o Prime Mover, w/15kw GEN, w/4 GM (PAC-3) w/Canister, 16 Missile Total	53,552 lb 24,291 kg	13.08 ft 3.99 m	9.42 ft 2.87 m	33.66 ft 10.26 m
Electric Power Unit II PU 804, Trailer Mounted, No Tractor, Full w/Fuel	5,920 lb 2,685 kg	7.00 ft 2.13 m	7.92 ft 2.41 m	13.75 ft 4.19 m
Maintenance Center (MC) w/M932 Tractor	40,680 lb 18,452 kg	11.42 ft 3.48 m	8.17 ft 2.49 m	46.07 ft 14.04 m
Small Repair Parts Transporter (SRPT) w/5-Ton M932 Tractor	39,390 lb 17,867 kg	11.42 ft 3.48 m	8.17 ft 2.49 m	46.07 ft 14.04 m
Large Repair Parts Transporter (LRPT) w/Light Duty MHE Crane, w/M977 Tractor w/ Winch Assem. (PLL parts not included)	40,241 lb 18,253 kg	11.92 ft 3.63 m	8.44 ft 2.57 m	33.42 ft 10.19 m

Guided Missile Transporter Truck w/Heavy Duty Crane, No Missiles, M985E1 Tractor and Trailer w/Winch	41,090 lb 18,638 kg	6.08 ft 1.85 m	8.44 ft 2.57 m	35.73 ft 10.89 m
Information and Coordination Central, AN/MSQ-16, w/M928 5-Ton, Tractor w/o Winch assem.	37,000 lb 16,783 kg	11.99 ft 3.66 m	8.54 ft 2.60 m	32.08 ft 9.78 m
Communications Relay Group (CRG), AN/MRC-137, w/M927 5-Ton, Tractor w/o Winch assem.	34,690 lb 15,735 kg	11.99 ft 3.66 m	8.54 ft 2.60 m	32.08 ft 9.78 m
Tactical Command System, AN/MSQ 129, w/M934A1 Tractor	29,280 lb 13,309 kg	11.86 ft 3.61 m	8.17 ft 2.49 m	30.22 ft 9.21 m
Heavy Expanded Mobility Tactical Trk (HEMTT), 10 Ton, M983	32,880 lb 14,914 kg	9.25 ft 2.82 m	8.46 ft 2.58 m	29.29 ft 8.93 m
Heavy Expanded Mobility Tactical Trk (HEMTT), 10 Ton, M983 Fuel-Empty-2500 gal.	38,165 lb 17,311 kg	9.25 ft 2.82 m	8.46 ft 2.58 m	33.4 ft 10.18 m
Heavy Expanded Mobility Tactical Trk (HEMTT), 10 Ton, M984A1 Wrecker	50,900 lb 23,088 kg	9.25 ft 2.82 m	8.46 ft 2.58 m	32.7 ft 9.97 m
Electric Power Plant (EPP) III Vehicle Mounted on M977 Tractor w/Winch,	52,910 lb 24,000 kg	11.25 ft 3.43 m	8.5 ft 2.59 m	33.40 ft 10.18 m
JP-8 Fuel (1 gal)	6.7 lbs 3.04 kg			
Water (1 gal)	8.0 lbs 3.63 kg			

Advertise with Us | **About Us** | **GlobalSecurity.org In the News** | **Internships** | **Site Map** | **Privacy**

Copyright © 2000-2009 GlobalSecurity.org All rights reserved.
Site maintained by: John Pike
Page last modified: 27-04-2005 22:49:19 Zulu