A 0.35µm CMOS 6-bit Current Steering DAC

Anand Narayanan, Mikael Bengtsson,
Rengarajan Ragavan,
Linköping University
SE-581 83 Linköping, Sweden
{anana725|mikbe335|renra986}@student.liu.se

Quoc-Tai Duong
Department of Electrical Engineering, Linköping University
SE-581 83 Linköping, Sweden
tai@isy.liu.se

***Abstract*— This paper presents the design and experimental results of a high speed, low-power, thermometer coded and current steered 6-bit digital-to-analog converter (DAC). It is based on a hybrid architecture with a switched current matrix controlled by the four most significant digital bits, and a conventional 2-bit current source controlled by the two least significant bits. The DAC occupies 0.15 mm^2 chip area in standard 0.35 µm Complementary metal-oxide-semiconductor (CMOS) technology. A spurious-free dynamic range (SFDR) of 25 dB has been measured over the complete Nyquist interval at sampling frequencies up to 800 MS/s with a power consumption of 165 mW at 3.3 V power supply.**

Keywords—CMOS, thermometer-coded, current-steering, current matrix, digital-to-analog converter.

I. Introduction

As the complexity of integrated circuit systems is increasing, the design of an interface between such systems is a very challenging task. One of the major applications of digital-to-analog converters are in digital imaging systems like high definition TVs. Such applications require high speed low cost and high resolution data converters. The speed and cost effectiveness of current-steering D/A converters makes it the ideal choice for such applications [1, 2, 3].

This paper presents a 6-bit thermometer coded, hybrid DAC which uses a current-matrix with 16 current sources which are controlled by the four most significant bits and a 2-bit conventional binary weighted DAC which is controlled by the two least significant bits. It has been fabricated in 0.35 µm CMOS technology and the measurement results of the chip have also been discussed. The measured integral nonlinearity (INL) is within 2.32 least significant bits (LSB) and the differential nonlinearity (DNL) lies within 0.04 LSB.

The organization of this paper is as follows, section II describes the architecture chosen and the basic operation principles. In section III, the design of the various building blocks used are explained namely the thermometer coder, current matrix, calibration unit and 2-bit binary weighted DAC are explained. The measured results are discussed in section IV followed by a conclusion.

II. Architecture

There is always a trade-off between precision and cost or area while choosing architecture for D/A converters. Hybrid DAC architectures provide a better balance on both precision and cost/area of the implementation [5, 6]. Thermometer coded current steering DACs are considered to be fast and high precision designs but this comes at the expense of higher cost in terms of the number of current-sources required. It would require 63 current sources to implement a 6-bit DAC fully using thermometer coded architecture. Whereas binary weighted DACs are simple but have poor precision and choosing such an approach would require the MSB current source to handle very high current. The hybrid architecture chosen combines the advantages of both these principles. Thermometer coded architecture is used for the four most significant bits which requires only 15 current sources and a conventional binary weighted architecture is used for the two least significant bits, thereby creating a balance in precision and complexity.

Figure 1 shows the basic architecture of the DAC. A current-cell matrix with uniformly-sized current sources has been used to achieve high differential linearity. A calibration unit has also been added which uses an external calibration current to set the bias of the unit current sources. An additional current source is required which acts as a spare and function instead of the current source which is under calibration thereby making a total of 16 current sources in the matrix. The control block synchronizes with the calibration unit and determines which current source to calibrate at a particular instant in time. Finally the weighted currents controlled by the two least significant bits are added to the output of the current from the matrix.

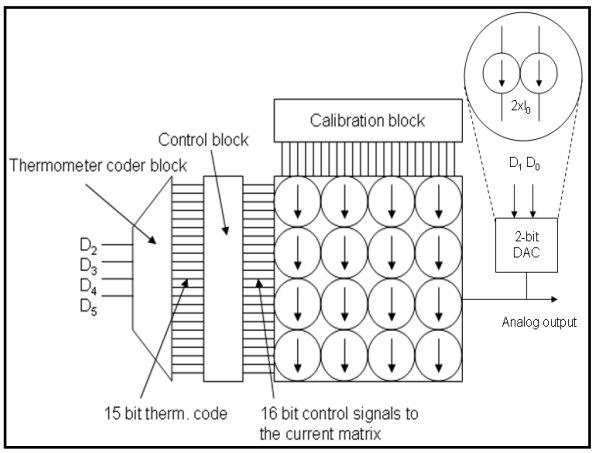

Fig. 1. Basic architecture

Authorized licensed use limited to: Silicon University. Downloaded on October 09,2025 at 06:59:51 UTC from IEEE Xplore. Restrictions apply.

III. SUB MODULES

The DAC was designed in four modules

- Thermometer encoder (4 bit to 15 bit)
- Current cell matrix (16 current cells)
- Calibration module (governs which current cell to recalibrate)
- 2-bit DAC (for the two least significant bits)

A. Thermometer Encoder

The benefit of using thermometer code instead of binary for the input data when connecting to a current cell matrix is twofold: First, each current cell is directly accessed by one output from the coder, which reduces the amount of logic needed at the site of the current cell. Second, it reduces the glitches at the output, as a unit change of the input only effects a change in single output bit. This is in contrast to binary codes where a switch from 1000 to 0111 effects four simultaneous bits to change, which increases the risks of some bits changing significantly earlier than others, coupling to the output current as a noticeable glitch.

A 4-bit to 15-bit thermometer coder was designed to convert the 4 most significant bits into signals that determine the number of current cells in the current matrix that should be driving a current to the output.

The coder was fully customized, and based on 2- and 3-input NAND gates, 2-input NOR gates, inverters, and flip flops for the synchronization. In order to have as clean signal as possible to work with, the inputs are latched with a D flip flop each, as are the outputs. This makes for transitions that occur at the same time, and at moments which as far as possible coincides with the moments that the calibration module outputs change.

B. Current Matrix

The current matrix module is the group of current sources arranged in a matrix fashion. This module generates certain magnitude of current according to the input data. This module acts as the heart of the whole system. As described above thermometer coder accepts 4-bit binary inputs and generates corresponding 15 bit coded output. Since we have 15-bit thermometer code we have 16 current sources collectively called the current matrix of which 15 current sources corresponds to 15 input data (0001 to 1111) and remaining one acts as spare current source. Each current source is capable of producing 'Iref' current when the corresponding thermometer coded data input is logic high. The spare current source is switched on when any of the other 15 current sources is kept under calibration. Here we have deliberately avoided 0000 input cases, since it is not going to contribute any amount of current to the output. All the discrete current outputs from the matrix are summed up to produce the differential output current. Based on the input data, the current summer unit gives out a current of magnitude between 0xIref and 60xIref.

Figure 2 shows the schematic view of a single current cell design [6].

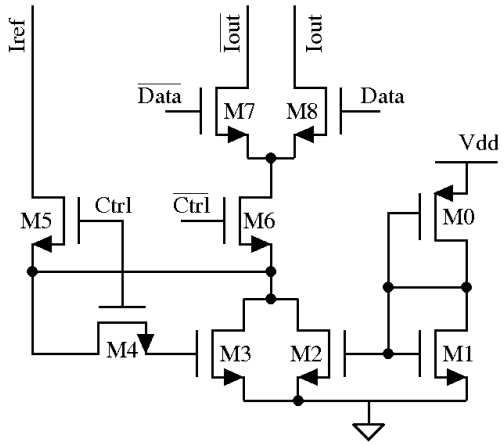

Fig. 2. Current Cell design

Transistors M2, M1 and M0 are biased in such a way, it generates 90% of Iref current and the remaining 10% is generated by M3 transistor. In the above circuit transistor M3 operates in two modes 1) Calibration mode 2) Operation mode.

When control signal *ctrl* is high, transistor M3 is a diode connected through switch M4, so that it is being calibrated to generate 10% of Iref as output current. When M3 is under calibration, output current from current cell is zero since the transistor M6 is open. Meanwhile the spare current cell is employed in the circuit to produce output current until the current cell is calibrated. By passing 10% of reference current to the drain of M3 the gate potential is fixed to produce same 10% of reference current during operation mode.

When *ctrl* signal is low, M3 is in operation mode by opening switch M4 and the calibrated gate potential is still present in the capacitor C_{gds} such that transistor produces 10% of Iref current. Differential output current of Iref is generated by summing the drain currents from the transistors M3 and M2.

C. Calibration Unit

A calibration module provides the logic signals that tell the current matrix which current source should be calibrated at any given moment. This is done by outputting a '1' on exactly one of the 16 outputs, and at each rising clock edge, move this active signal to the next output.

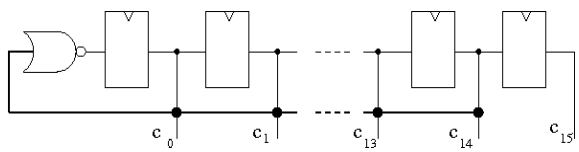

Fig. 3. High level view of the proposed calibration module

A high-level schematic for this is shown in Fig. 3**.** It consists of a 16 bit shift register (consisting of D flip flops)

Authorized licensed use limited to: Silicon University. Downloaded on October 09,2025 at 06:59:51 UTC from IEEE Xplore. Restrictions apply.

and a 15-input NOR gate designed in dynamic logic, which provides the input to the first flip flop. This design guarantees that any random states of the flip flops introduced e.g. at boot time, will be washed out within 16 clock cycles. The reason for the dynamic logic of the NOR gate is to reduce the high delay that a tree structure of 2- or 3-input static gates would have caused.

The flip flops in Fig. 4 are so called "modified C^2MOS" (mC^2MOS) with synchronous reset, and designed for clock frequencies up to 900MHz. Each flip flop provides its own clock inverter, and drivers for the outputs.

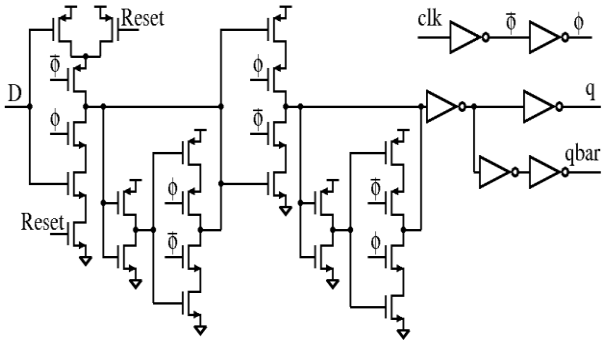

Fig. 4. The used mC^2MOS flip flop with synchronous reset [7]

D. 2bit Binary DAC

Use of conventional binary weighted designs significantly reduces the layout area of DAC [4, 5], but have less precision. In this design the binary weighted architecture is used for the two least significant bits as shown in Fig. 5. The two reference currents (I_0, $2I_0$) are copied to the output through an NMOS current mirror, depending on the bit values (b_0, b_1). Further, these reference currents are generated from an external reference with a PMOS current mirror to achieve isolation from the output load.

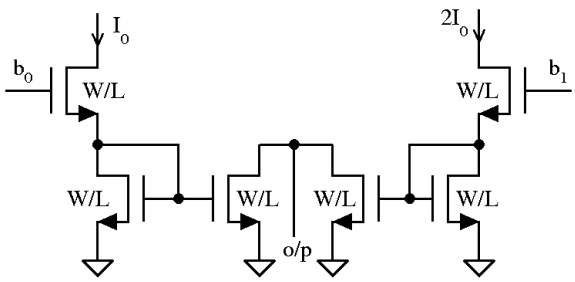

Fig. 5. 2-bit Binary weighted DAC

IV. Measurements and Results

The DAC has been fabricated using 0.35um CMOS technology. The layout and microphotograph of the chip are shown in the Fig. 6 and Fig. 7. The chip of DAC occupies a quarter of area in Fig. 7 while area left are occupied by chips from other project groups in Very Large Scaled Integrated (VLSI) course from the Electronic Devices Division, Linköping University, Sweden. A set of experiments has been carried out to verify the proper functionality of the DAC chip; here we have run a few tests to measure Spurious Free Dynamic Range (SFDR), Integral Non-linearity (INL) and Differential Non-linearity (DNL) of the DAC chip.

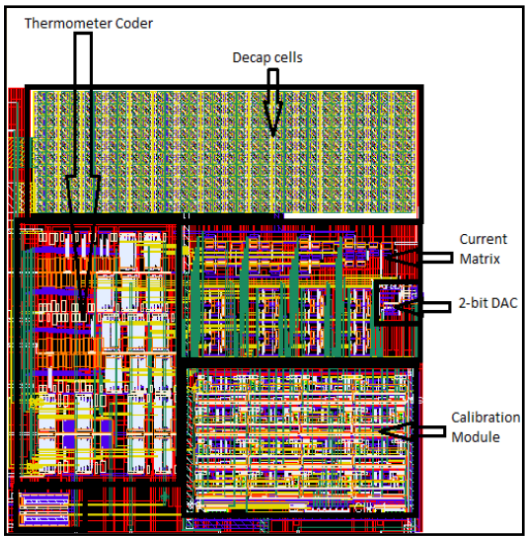

Fig. 6. Layout of the DAC

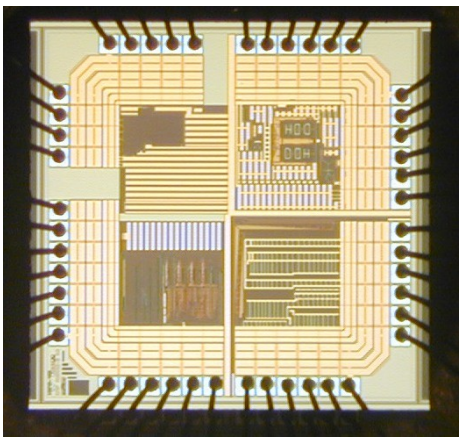

Fig. 7. Microphotograph of the chip

A. Spurious Free Dynamic Range

In this test, binary form of a sine wave was fed as input with N samples per period, for N=32 and N=64. These sequences were fed to the chip at a rate of one data point every 10ns, emulating sine waves of frequencies 3.125MHz and 1.5625MHz, respectively. The signal strength of the principal component and the second strongest component (harmonic / noise) was observed, while operating with a clock frequency of 700 MHz and 800 MHz. Those results are listed in table I.

TABLE I. SFDR MEASUREMENT

Operating frequency	Samples	SFDR (dB)
700 MHz	32	25
800 MHz	32	24
700 MHz	64	22
800 MHz	64	22

Authorized licensed use limited to: Silicon University. Downloaded on October 09,2025 at 06:59:51 UTC from IEEE Xplore. Restrictions apply.

B. INL and DNL measurement

To test the linearity of the DAC chip, we conducted experiments to measure INL and DNL by feeding binary sequence (111111 to 000000). Differential Non-Linearity is measured by calculating the deviation between two adjacent output values which defines the accuracy of the DAC. Figure 8 shows the plot of DNL in LSB v/s 64 possible codes of the 6-bit DAC. The average DNL of this DAC is measured to be 0.04 LSB.

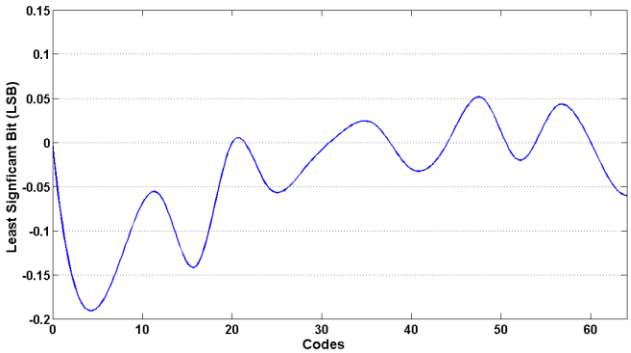

Fig. 8. DNL measurement

Integral non linearity is measured by finding out the maximum difference of Ideal output voltage to actual output voltage. The maximum measured integral nonlinearity is within 2.32 LSB.

V. Conclusion

A 6-bit high speed DAC has been implemented using 0.35 µm CMOS technology. We have implemented this DAC in a hybrid fashion, current-matrix with 16 uniform-sized current sources which are controlled by the four most significant bits and a 2-bit conventional binary weighted DAC. In this design we have achieved low power, lesser area DAC which operates at 800MS/s rate. Thermometer coder has been used for 4 MSBs which reduces the power consumption in this design.

VI. Acknowledgment

This work is based on the result of student project which is part of the undergraduate level VLSI chip design course TSEK06, at Electronic Devices Division, Department of Electrical Engineering, Linköping University, Sweden. The authors acknowledge the course for outstanding chip design education and support for chip fabrication cost.

References

[1] Xu Wu, Pieter Palmers, Michiel S. J. Steyaert, “A 130 nm CMOS 6-bit Full Nyquist 3 GS/s DAC,” IEEE journal of solid-state circuits, vol. 43, no. 11, november 2008.

[2] Pieter Palmers, Michiel S. J. Steyaert, “A 10–Bit 1.6-GS/s 27-mW Current-Steering D/A Converter With 550-MHz 54-dB SFDR Bandwidth in 130-nm CMOS,” IEEE transactions on circuits and systems—i: regular papers, vol. 57, no. 11, november 2010.

[3] Anne Van den Bosch, Marc A. F. Borremans, Michel S. J. Steyaert, Willy Sansen, “A 10-bit 1-GSample/s Nyquist Current-Steering CMOS D/A Converter,” IEEE journal of solid-state circuits, vol. 36, no. 3, march 2001.

[4] Gupta, S.; Saxena, V.; Campbell, K.A.; Baker, R.J., "W-2W Current Steering DAC for Programming Phase Change Memory," *Microelectronics and Electron Devices, 2009. WMED 2009. IEEE Workshop on* , vol., no., pp.1,4, 3-3 April 2009.

[5] David A. Johns, Ken Martin, Analog Integrated Circuits Design, Second edition, John Wiley & Sons, 1997, *ISBN 0-471-14448-7.*

[6] Rudy van de Plassche, CMOS Integrated Analog to Digital and Digital to Analog convertors, Second edition, Kluwer academic publishers, 2003, *ISBN 1-4020-7500-6.*

[7] A. Alvandpour, “On-chip timing and synchronization”, class notes for TSEK06, Dept. of Electrical Engineering (ISY), Linköping University, 2012.

Authorized licensed use limited to: Silicon University. Downloaded on October 09,2025 at 06:59:51 UTC from IEEE Xplore. Restrictions apply.