Low-Power Approaches to High-Speed Current-Steering Digital-to-Analog Converters in 0.18-μm CMOS

Douglas A. Mercer, *Member, IEEE*

***Abstract*—This paper will discuss a number of circuit approaches which lower the power consumed by a current steering digital-to-analog converter while maintaining both DC and AC performance levels. An example design provides 14-bit resolution and 200 MSPS conversion rate in a one-poly four-metal (1P4M) 0.18-μm CMOS process. The inclusion of optional 3.3-V compatible devices allows operation over a supply range from 1.7 to 3.6 V. A power dissipation/conversion rate figure of merit of as low as 0.17 mW/MSPS was achieved for 1.8-V operation and as low as 0.28 mW/MSPS at 3.3 V. A measured single-tone SFDR of 70 dB is achieved at a 50-MHz output frequency, with a two-tone IMD of −75 dBc at 71 MHz output.**

***Index Terms*—Calibration, CMOS, digital-to-analog converter (DAC), high linearity, high speed, low power, self-calibration.**

I. Introduction

FINE-LINE CMOS has become the process of choice for high sample rate current-steering DAC design [1]–[5], [9], [14]. Submicron gate-length MOS transistors have allowed sample rates of many hundreds of MHz. Unlike the switched capacitor circuits used in many ADCs which require mixed-signal process variants with high quality poly–poly or metal–metal capacitors, switched current DACs can make use of standard CMOS processes. Reported state-of-the-art devices typically provide 20-mA full-scale output currents with resolutions from 12 to 16 bits and sample rates up to 1.4 GHz.

A comparison of recent low-power current-steering DACs is listed in Table I. A simple figure of merit (FOM) which compares designs along just two dimensions of power and sample rate is used. This is sufficient for this discussion of applications where low power is a primary design goal. The 14-bit self-calibrating DAC in [4] has a 0.2-mW/MSPS FOM but has limited reported spurious-free dynamic range (SFDR) performance of 45 dB at a 25-MHz output frequency. Another 14-bit self-calibrating design in [14] has a similar FOM of 0.17 mW/MSPS. It operates on a 1.5-V supply with a reported 62-dBc SFDR at 42-MHz output and 100 MSPS. The 10-bit binary DAC presented in [5] with a reported 65-dBc SFDR, again at 25-MHz output, has a 0.09-mW/MSPS FOM at 10-mA full scale and operates from dual 1.5/1.8-V supplies. There are competing tradeoffs to be made between power consumption and dynamic performance at high output frequencies [4], [5], [14]. The best design approach is to find an optimal balance of these requirements. In this example, use of mixed voltage process options allows the analog section to be operated from higher supply voltages than the digital section and thus provides larger output voltage compliance and swing. Many important applications for data converters in this class require output common-mode voltages above the ground potential. By including a node for the output common-mode level separate from the common or ground node of the rest of the circuit, the flexibility to trade higher analog supply voltage for higher analog output common-mode voltage is provided.

The basic structure of this design, shown in Fig. 1, provides 14 bits of overall resolution. Following the arrangement of past designs [1], the most significant bit segment (5MSBs) is made from 31 unit weighted elements and is thermometer coded. Each unit element consists of a double-cascoded pMOS current source and a differential current switch pair. The remaining 9 bits of the DAC are further segmented into four thermometer coded intermediate bits with the 5 least significant bits binary coded.

The remainder of this paper describes key design considerations in greater detail. Power tradeoffs are discussed in Section II. Data-dependent loading of the final retiming clock is discussed in Section III. The circuits that drive the current switches are discussed in Section IV. In Section V, degradation due to data-dependent finite output impedance is addressed. The use of a second active cascode in the DAC current sources is outlined in Section VI. Device matching and DC linearity aspects of the design are covered in Section VII. Overall DAC performance is summarized in Section VIII.

II. Power Discussion

Power or supply current in a CMOS current-steering DAC can be divided into three categories. The first comes from the digital logic and clock section and directly scales with the sample frequency and the data activity. CMOS has the advantage that the power consumed will benefit from advances in process and supply voltage scaling. By way of illustration, the digital logic portion of [1] consumes 60 μA/MHz at 5 V, up to a 125 MHz maximum. The optimized logic portion of this design consumes 56 μA/MHz at 3.3 V, up to a 200 MHz maximum. At the same time, the logic can be operated from 1.8 V and the current drops to less than half at 22 μA/MHz, while the maximum frequency drops by one half to 100 MHz. This process and supply voltage

Manuscript received November 27, 2006; revised March 5, 2007.

The author is with Analog Devices, Wilmington, MA 01887 USA (e-mail: doug.mercer@analog.com).

Digital Object Identifier 10.1109/JSSC.2007.900279

0018-9200/$25.00 © 2007 IEEE
Authorized licensed use limited to: Silicon University. Downloaded on October 09,2025 at 07:05:16 UTC from IEEE Xplore. Restrictions apply.

TABLE I
LOW-POWER IDAC COMPARISON

Paper Reference	FOM	Resolution	Supply voltage	Maximum sample rate	SFDR	Process node
[4] Tiilikainen	0.2mW/MSPS	14	1.8 V	100 MHz	45 dB @ 25 MHz	0.18u
[14] Cong	0.17mW/MSPS	14	1.5V	100 MHz	62 dB @ 42 MHz	0.13u
[5] Deveugele	0.09mW/MSPS	10	1.5V / 1.8V	250 MHz	65 dB @ 25 MHz	0.18u
This work	0.28mW/MSPS 0.17mW/MSPS	14	3.3V to 1.8V	200 MHz / 100 MHz	70 dB @ 50 MHz	0.18u

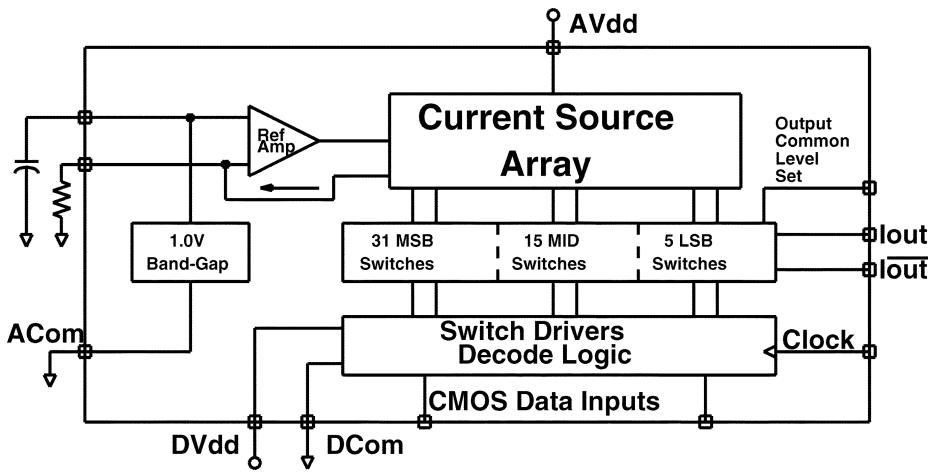

Fig. 1. DAC basic structure.

scaling has resulted in an 86% reduction in the digital power consumed. The DAC in [5] takes this one step further by foregoing the performance benefits of thermometer decoding the most significant bits in favor of using the binary code directly to switch multiple unit elements. This binary coding approach can be used to lower the power when 10-bit performance levels are sufficient for the target application.

The second and third supply current categories are analog in nature. The full-scale output current is the major portion of the current in the analog supply. A popular output current for previous designs was 20 mA because it provided 1-V signal swings in 50-Ω systems. An obvious place to reduce power is to lower the full-scale current. The nominal output current is lowered to 2 mA in this test case and can range from 1 mA to 5 mA. The third part of the analog supply current is overhead and comes from the bandgap reference and various bias circuits. Inclusion of these bias circuits can have a significant effect on the spurious performance of the DAC. For example, with an analog supply overhead current of 5 mA in addition to the full-scale output, the DAC in [1] does not include a cascode in the pMOS current sources and achieves 61 dBc at $F_{\text{out}} = 10$ MHz. Whereas the DAC in [7] includes a cascode and has SFDR = 73 dBc, an improvement of 12 dB over the DAC in [1]. The addition of the cascode bias circuit increases the analog supply overhead current by 7 mA to a total of 12 mA. The challenge in low-power designs is to implement these performance enhancing parts of the circuit while using a minimum of current. In this example two levels of cascode are included in a total analog supply current of 2.5 mA in addition to the nominal 2-mA full-scale current. The SFDR performance of this DAC at $F_{\text{out}} = 10$ MHz is improved by 10 dB over the DAC in [7] to 83 dBc.

The power in the analog, digital and clock portions, as well as the total, is plotted versus clock frequency in Fig. 2 for a fixed $F_{\text{out}}/F_{\text{clk}} = 1/10$. The output current is set at the nominal level of 2 mA and the supply voltage is set at 1.8 V. As one would expect, the analog portion of the power is relatively independent of the clock frequency at 8.5 mW. The power for the digital and clock portions scales linearly with the clock frequency with a total slope of 52 μW/MSPS. Similarly, at 3.3 V the relatively constant analog power is 15 mW and the dynamic power has a slope of 240 μW/MSPS. Lowering the supply voltage has a pronounced effect on the total power. The lower limit of the supply voltage for this design is 1.5 V when the full-scale current is lowered to 1 mA.

III. DATA-DEPENDENT CLOCK LOADING

Due to the mixed-signal nature of a DAC, digital data activity on the die will cause interference in the analog and clock sections of the device. This becomes an important performance issue as the signal power is scaled down. A special case of data-dependent interference comes from the varying load seen by the final clock buffer which drives the final retiming latches in the DAC [8]. The simple six-transistor latch topology first used in [1] is shown in Fig. 3 [16], and provides the smallest CLK to Q delay known to the author. True and complement data inputs at D and DB change only when CLK is low, i.e., when nMOS transistors MN1,2 are off. When a rising edge transition occurs on the CLK input, the value of D is passed to Q and DB is passed

Authorized licensed use limited to: Silicon University. Downloaded on October 09,2025 at 07:05:16 UTC from IEEE Xplore. Restrictions apply.

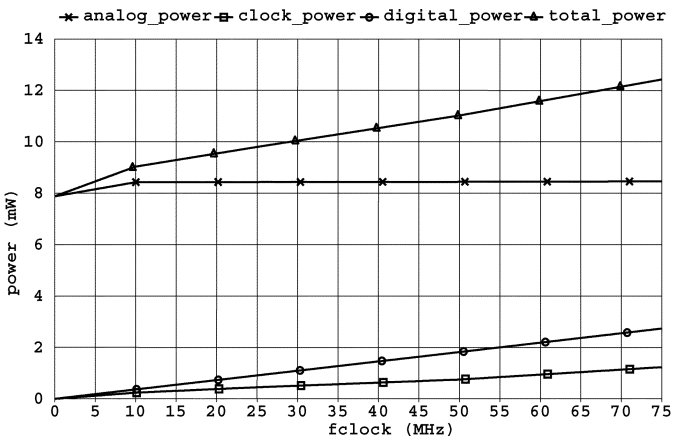

Fig. 2. Power versus clock frequency.

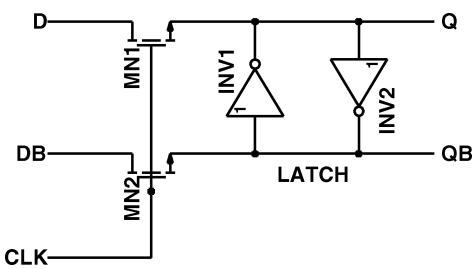

Fig. 3. Final latch circuit.

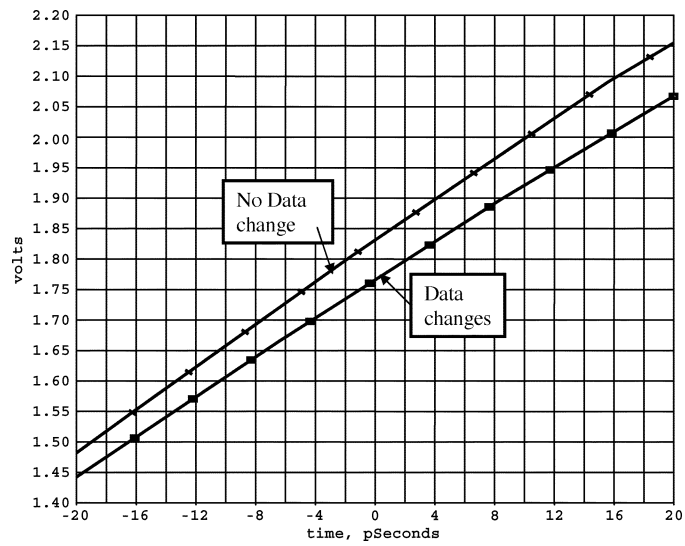

Fig. 4. Data-dependent clock delay.

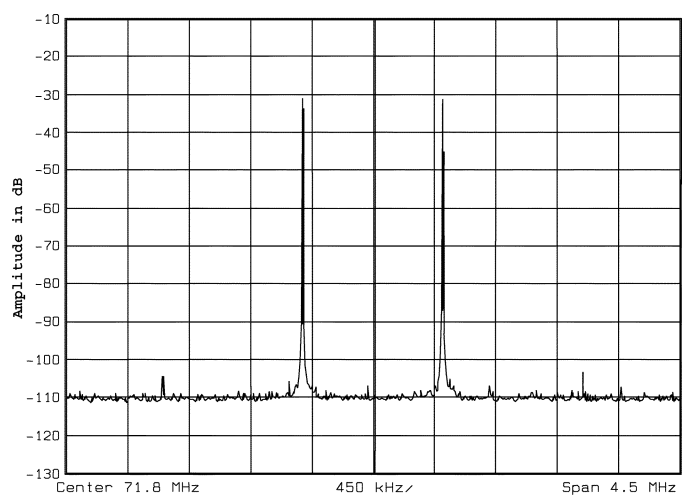

Fig. 5. Two-tone spectrum using Fig. 3 configured latch.

to QB. When the CLK signal transitions back to a low state, the state of Q and QB is held by the positive feedback around weak inverters INV1,2.

Any latch topology, to varying degrees, presents a load to the buffer driving the clock input of the latch that depends on whether the state of the latch is about to change or not. An example of this effect for the latch topology used here is shown in Fig. 4. This effect is made more pronounced by using a relatively weak buffer in this simulation for clarity. The simulated time when the rising edge of the clock signal crosses mid supply (1.8 V) is plotted for the case of a single latch when the input data is not changing and when the input data is changing. This simulation shows a 4-ps difference. Given the finite strength of the final clock buffer, the effect is magnified when a large number of latches are driven by the same common clock buffer and is proportional to the number of latches which change their state. In the case of thermometer-coded data, the number of unit MSB cells switching is proportional to the absolute value of the rate of change of the reconstructed output waveform. The time-shift of the output samples is thus proportional to this rate-of-change and so results in odd-order distortions, mainly third order. The effect of the data dependent clock loading is most prominent at high output frequencies. The DAC with the latch configured as in Fig. 3 was measured and the two-tone spectrum is shown in Fig. 5. The two tones are spaced 1 MHz apart centered on 71 MHz at a sample rate of 175 MSPS. The third-order inter-modulation distortion (IMD) spurs are approximately −73 dB with respect to the signal level of the two output tones.

A solution to this problem as proposed in [2], [8], [15] is shown in Fig. 6. In this method, the number of latches is doubled and logic is added, which creates a second alternate data stream which causes the second latch to change on clock cycles when the main data latch does not. This in effect doubles the amount of hardware and thus the power consumed in each cell of the thermometer coded data. There is also the issue of significant energy at $F_{\mathrm{clock}}/2$ which may result in in-band spurs.

A more area- and power-efficient solution which addresses this problem is shown in Fig. 7 [9], [10]. The top portion, which includes transistors MN1,2 and INV1,2 is the standard latch from Fig. 3. The bottom portion is the compensating load which provides, through nMOS transistors MN3,4, a load which varies in a way opposite to the load provided by MN1,2.

The gate current that the buffer-driving CLK needs to supply to transistor MN1 is a function of the relative voltage levels present at input D and output Q. If the voltage on D is the same as on Q, a slightly smaller amount of charge is needed to turn on MN1 than if D is not equal to Q. MN3 shares the drain connection with MN1 at input D, but the source is connected to the output of INV6. The voltage on the output of INV6 will be opposite that of INV1 because the input of INV6 is connected to

Authorized licensed use limited to: Silicon University. Downloaded on October 09,2025 at 07:05:16 UTC from IEEE Xplore. Restrictions apply.

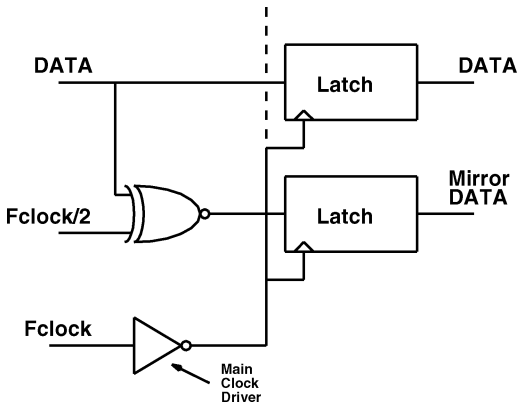

Fig. 6. Constant clock load data path.

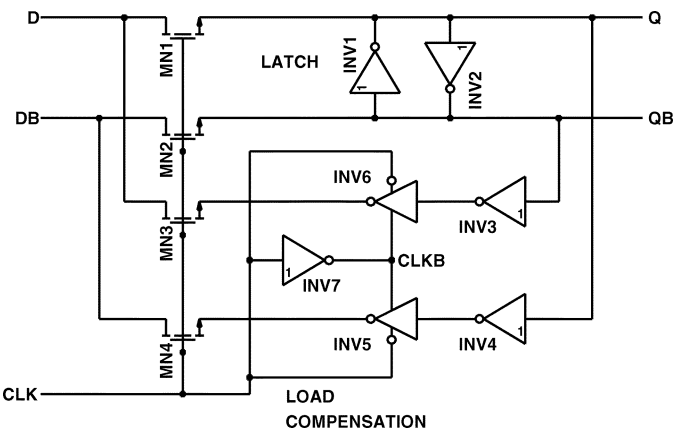

Fig. 7. Constant clock load latch.

INV3, an inverted version of output QB. INV6 is a gated inverter and the output will be in a high impedance state when CLK is high and will be driven high or low when CLK is low.

It can be seen that, for all possible combinations of the inputs and state of the latch, of the four switches MN1,2,3,4 one will have high to low across source to drain (S-D), one will have low to high across S-D, one will have high to high across S-D and one will have low to low across S-D. Therefore, as far as the charge that is needed to be supplied by the clock driver to turn on these four switches is concerned, it should be invariant with the data pattern. There is no energy at $F_{\text{clock}}/2$ and actually the supply current in INV5,6 has energy at $2 * F_{\text{clock}}$.

Shortly after the CLK line goes high, the latch formed by cross-connected INV1 and INV2 will have regenerated, thus making the voltage levels on the source and drain of MN1,2 the same. INV5,6 will now be in tri-state equalizing the voltages across S-D of MN3,4. When CLK returns low MN1-4 turn off and INV5,6 come out of tri-state and the cycle is ready to start over again. It is necessary to balance the relative strengths of the weak inverters INV1,2, used in the latch, with the gated inverters INV5,6 to insure data independent loading on the clock driver. Gated inverters INV5,6 are sized such that their delay entering into tri-state is about the same as the regeneration time of the INV1,2 latch.

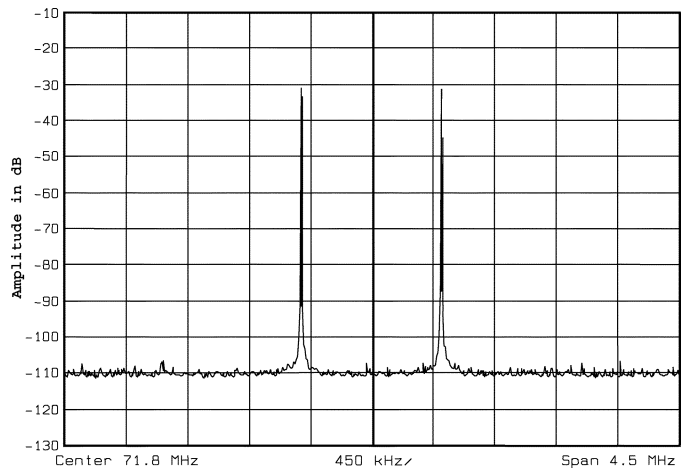

Fig. 8. Two-tone spectrum using Fig. 7 configured latch.

The same DAC from Fig. 5 with its latch reconfigured as Fig. 7 was measured again under the same conditions. The improvement of the constant clock load latch on the third order inter-modulation is evident in the two-tone spectrum, shown in Fig. 8. The third-order spurs are reduced by 7 dB and are now masked by the noise floor.

IV. Switch Gate Drive

The differential output switch pair (M1,M2; Fig. 9) could be driven directly with full supply rail swing outputs of the CMOS logic, specifically the Q, QB nodes in Fig. 7. This would be the lowest power solution. However, it is well known that for the best SFDR performance, the crossing point for the gate drive signals of the output current switch pair needs to be optimized [1], [2]. The circuit that drives the differential switch should ensure that both switches are never completely off at the same time so that the current from the current source is always flowing at a constant value. This minimizes the excursion of the voltage on the switch common source node, Cs, during a transition. Any current lost to parasitic capacitor C1 causes nonlinearity. The disturbance on Cs should be symmetric around the nominal DC value. To the extent that the disturbance cannot be completely eliminated it is important that C1 be minimized. It is also important to note that it is not necessary to bring the gates of the switch devices any higher than the voltage on the common source node Cs, when turning off the device $(V_{gs} = 0)$. Limiting the swing in this way reduces any feedthrough of the gate drive signals to the outputs or to the common source node.

The circuit which produces the appropriate signals at the gates is shown in Fig. 10. The full supply rail swing outputs from the final latch, Q, QB in Fig. 7, are used to turn on and off nMOS devices MN1-4 which connect the two outputs G1 and G2 to either the output common level node or the VSB bias node. The output common level is most often ground but in this design can be adjusted, external to the die, to accommodate interfacing to other circuits, such as a mixer or modulator, which may require that the common mode voltage be as much as 1.2 V or more. The amount of output shift can be traded off with increasing or decreasing the analog supply voltage. The

Authorized licensed use limited to: Silicon University. Downloaded on October 09,2025 at 07:05:16 UTC from IEEE Xplore. Restrictions apply.

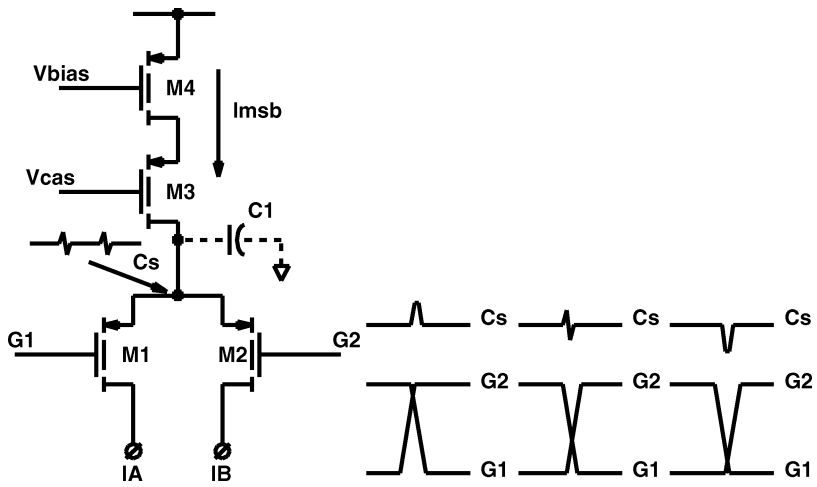

Fig. 9. Output switch gate waveforms.

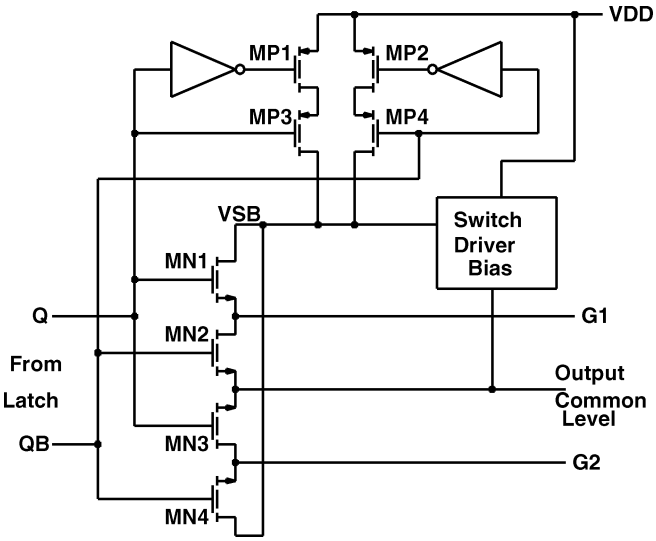

Fig. 10. Output switch driver circuit.

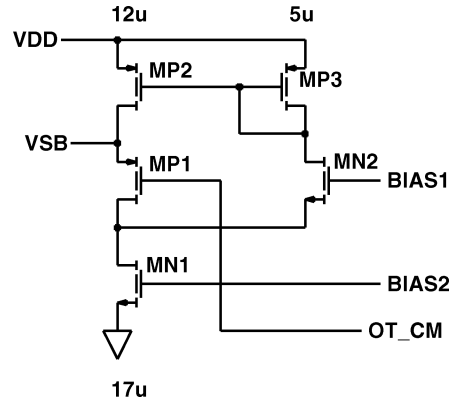

Fig. 11. Switch driver bias circuit.

VSB node is driven to a voltage approximately the V_{gs} of the output switches above the output common level.

For each transition of the data a large narrow spike of current is drawn from the VSB node by device MN1 or MN4. Normally the switch driver bias block would need to be designed to supply this current and have sufficiently low impedance to settle back to its nominal value within one clock cycle. This often requires considerable static DC current, increasing the power consumed in the circuit as in [1] and [7]. pMOS devices MP1-4 have been added to supply a similar narrow spike of current from the VDD power supply when a data transition occurs. This allows the switch driver bias block to be designed with much smaller static current. The power consumed by the circuit is now much more a function of the clock frequency and the data pattern. To save power, two of the inverters, INV3,4, in Fig. 7 can also serve as the two inverters which drive the gates of MP1,2 in Fig. 10.

The switch driver bias generator is shown in Fig. 11. pMOS device MP1 is scaled to mimic one of the output switches. The voltage on node VSB will be equal to the voltage on node OT_CM (output common level from Fig. 10), plus the V_{gs} of MP1. nMOS device MN1, driven from BIAS2, determines the overall current level in the block. A portion of MN1's current is diverted by MN2 and through the mirror gain of MP3 to MP2 (approximately 3 in this case) supplies the current to the source of MP1. This feedback provides some degree of regulation and lowers the impedance at node VSB.

V. Finite Output Impedance

An INL mechanism that results from the use of a switched current source architecture is code-dependent output impedance [2], [8]. As an increasing number of unit elements is switched to the output, the resistance of that element's current source Z_{sw} appears in parallel with the output load Z_L in Fig. 12. As the number of elements turned on increases, the effective output impedance of the DAC in total decreases. As the output current of the DAC varies with input code, this variable resistance in parallel with the load resistor will result in a non linear output voltage across the load.

If the output swing is limited such that the output switches (MP1 and MP2 in Fig. 12) remain in saturation, the inclusion of a single cascode, such as MP3 in Fig. 12, is often sufficient to raise the output resistance high enough to insure good DC linearity. The effect of parasitic capacitance on the output

Authorized licensed use limited to: Silicon University. Downloaded on October 09,2025 at 07:05:16 UTC from IEEE Xplore. Restrictions apply.

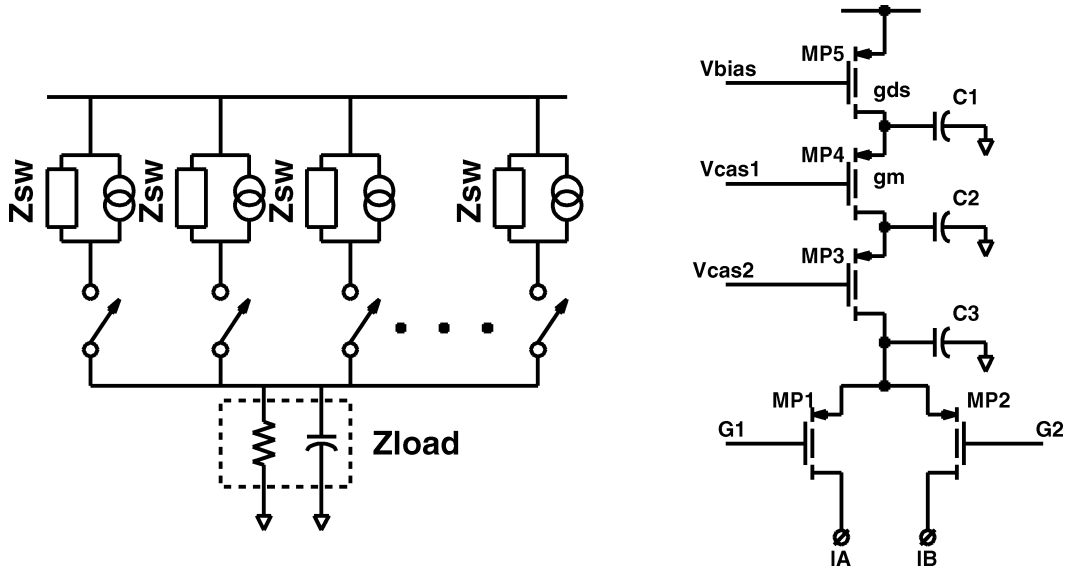

Fig. 12. Code-dependent output impedance.

impedance, however, will tend to dominate as the reconstructed frequency increases.

While it is true that output impedance requirements are greatly reduced for fully differential output configurations, it is important to design the output switches and their gate voltages so as to keep the output switches in saturation. This maximizes the attenuation of the output swing seen at the common source nodes of the differential switches. The small-signal attenuation of the switches is given by the ratio of the device g_m to g_{ds}. Typical values of this ratio are in the range of 20 and can be as high as 60 in this work.

Early work reported in [12] suggests high-speed operation requires a small and linear source node capacitance for the switches. A switch unit element will see an attenuated output signal on the switch common source node, and any nonlinear back gate capacitance on this node will produce distortion. Tying the switch and cascode transistors' back-gates to the supply reduces nonlinear capacitances, but for a large number of unit cells, the total nonlinear capacitance can be significant. The use of a second cascode provides an additional degree of freedom to minimize the size of this device and thus minimize the capacitance.

VI. Active Second Cascode

In order to support a 1 V or greater output swing from the 2-mA output current, the nominal output load needs to increase by 10X over the 50 Ω typical for 20-mA DACs to a nominal 500 Ω. This forces the need to boost the output impedance of the DAC by 10X as well. The 20-mA full-scale DAC with 127 unit MSB elements in [2] uses two levels of cascode to support 16-bit performance in a 50-Ω system. The accuracy requirement of this design with 31 unit elements is relaxed to 14 bits which is a factor of 4 less than that in [2]. The minimum process design rules do not allow the output devices to be scale by a factor of 10 from [2]. This limitation requires that the current source include two levels of cascode.

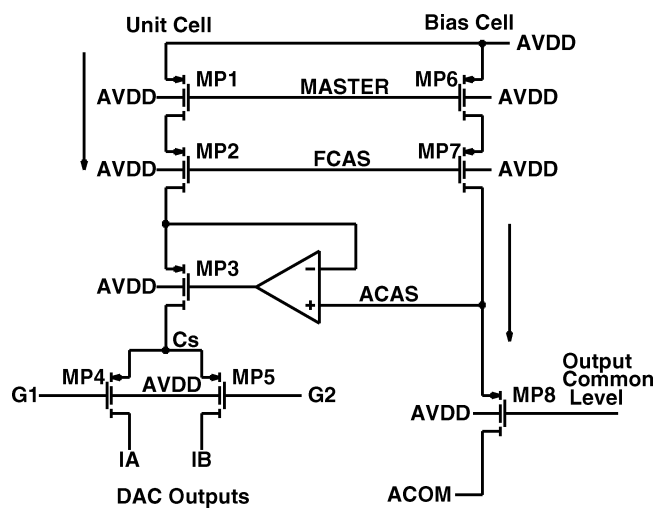

Fig. 13. Active cascode.

Operation over a wide range of supply voltages, from 3.3 V to 1.8 V, can be an important feature of low-power design. In this context, the sensitivity of the MOS threshold voltage, V_t, to the amount of reverse bias on the backgate with respect to the source is an important effect. As indicated in Fig. 13, the N-wells of all pMOS devices are connected to the positive supply AVDD. Both the gate bias, MASTER, for the main current source MP1 and the gate bias, FCAS, for the first cascode MP2 are generated with respect to AVDD. Thus, the amount of backgate bias is independent of AVDD. However, the gate signals (G1,G2) for output switches MP4,5 and lower active cascode MP3 are generated with respect to the output common mode level which could be ground, ACOM, or a fixed voltage above ground. As a result, the backgate bias and hence the V_t and the V_{gs} of these devices will vary with the supply voltage and output common mode level. For the active cascode, a scaled version of the unit cell, MP6-8 is used to generate the ACAS bias level which is common to all the unit cells. The V_{gs} of MP8 will track that of

Authorized licensed use limited to: Silicon University. Downloaded on October 09,2025 at 07:05:16 UTC from IEEE Xplore. Restrictions apply.

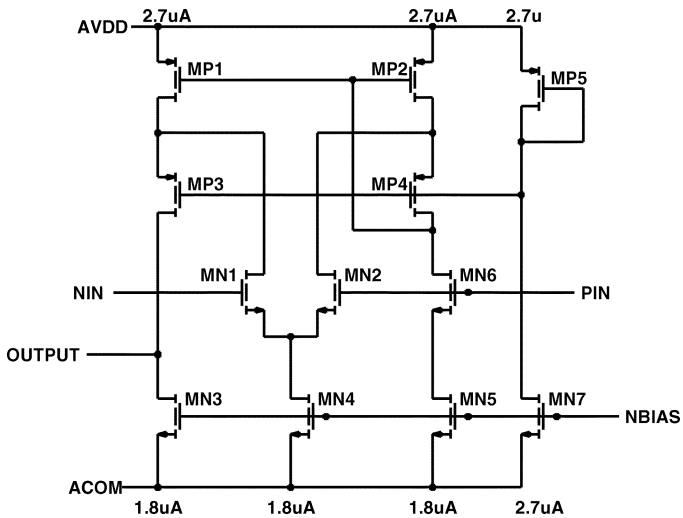

Fig. 14. Active cascode amplifier.

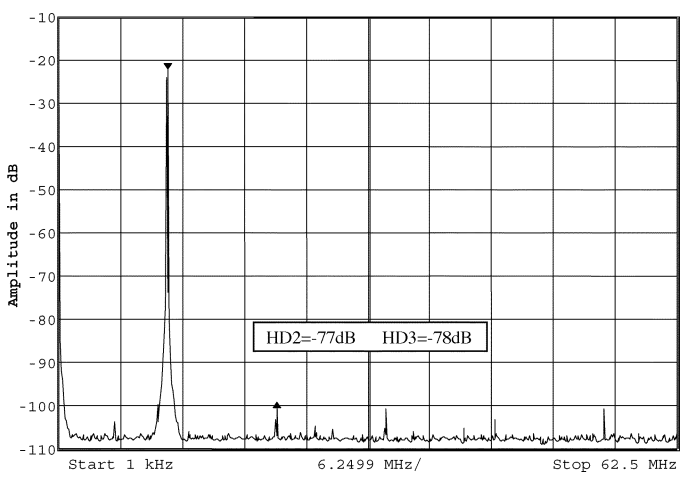

Fig. 15. Single-tone output spectrum, 11-MHz output, 125 MSPS.

switches MP4,5 as the voltage on AVDD or the output common mode level varies. The gate of the active cascode MP3 will be driven optimally such that the V_{ds} of MP3 is maintained just sufficiently in saturation for any value of AVDD. The lower limit on the supply voltage is reached when the V_{ds} of the first cascode MP2 drops below its saturation level. This is a relatively benign effect to output SFDR as the active cascode still provides a relatively high impedance at the drain of MP3.

Fig. 14 is the schematic for the amplifier used in the active cascode. The topology chosen must be small, simple and the current consumed must be low because each unit switch cell (51 in total) contains its own active cascode. The current is just over 8 μA per amplifier. The amplifier uses a conventional nMOS input pair driving into a folded pMOS cascode output section. The voltage level at the input nodes is the V_{gs} of MP8 (Fig. 13) plus the output common mode level, which is sufficient for the V_{gs} of nMOS pair MN1,MN2 and the V_{dsat} of current source MN4. The output needs to be able to swing very close to ACOM, so no output cascode was used on the nMOS current source MN3. An extremely wide signal bandwidth is not needed in this circuit. It is intended to track changes in the supply voltage, but not suppress fast disturbances. However, even at this low current level it has a usable bandwidth of 40 MHz.

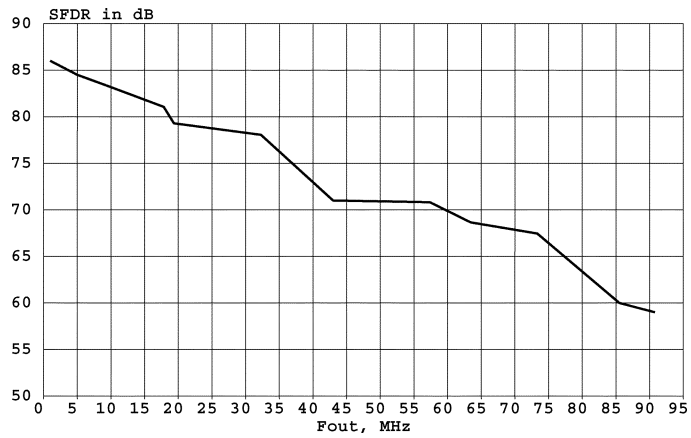

Fig. 16. Spurious-free dynamic range, 2-mA full-scale output, 3.3 V, 200 MSPS.

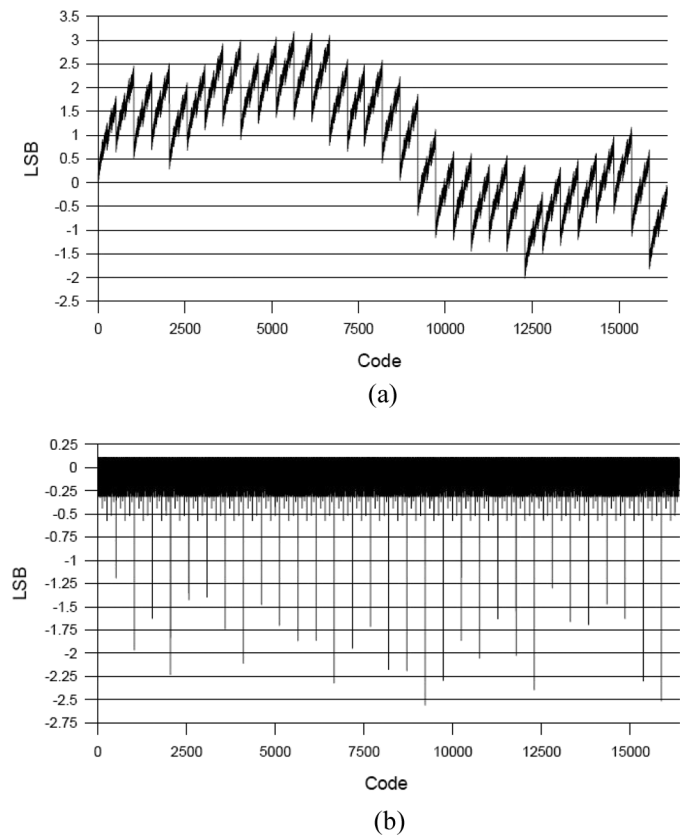

Fig. 17. Uncalibrated (a) DNL and (b) INL (14 bits).

As an indication of the level of performance achieved by using the reduced swing gate drive and active cascode circuits, a representative output spectrum for a single tone at 11 MHz and 125 MSPS is shown in Fig. 15. The HD2 and HD3 are −77 dBc and −78 dBc, respectively, and are actually very close to the performance limit of the spectrum analyzer. A plot of the SFDR versus output frequency at 200 MSPS and 3.3-V power supply is shown in Fig. 16. Notch filters are used to reduce the fundamental amplitude and improve the apparent linear dynamic range of the spectrum analyzer. The DC linearity limited performance of 86 dB starts to fall off as the dynamic effects start to dominate at higher frequencies. The SFDR maintains approximately 60 dB at 90 MHz.

Authorized licensed use limited to: Silicon University. Downloaded on October 09,2025 at 07:05:16 UTC from IEEE Xplore. Restrictions apply.

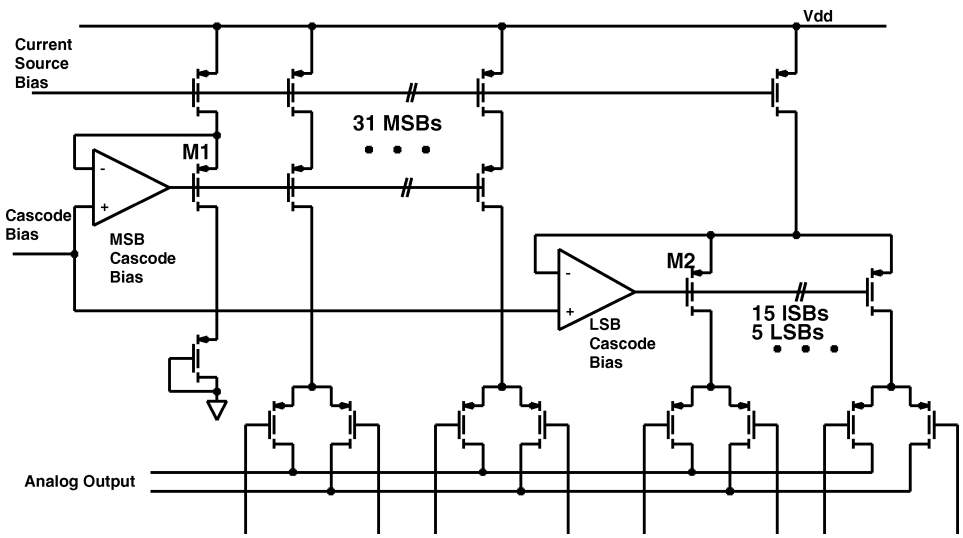

Fig. 18. LSB sub-DAC arrangement.

VII. Matching and DC Linearity

The pMOS devices which made up the main current sources in previous designs in 0.6-μm CMOS such as [1], which operated from a 5-V power supply, are sized to provide sufficient yield to 12-bit linearity without any calibration. An important aspect of design for good current source matching is the level of $V_{gs} - V_t$ at which the devices operate. The larger this gate overdrive, the smaller the effect of random variations in V_t on the current sources. With the headroom a 5-V supply affords, it is possible to size the transistors with a generous $V_{gs} - V_t$ of around 600 mV in the 0.6-μm process. As the supply voltage shrinks such as in a 0.35-μm 3.3-V design [11], the $V_{gs} - V_t$ is reduced to approximately 450 mV. In this design example, which can operate from 1.8 V, the $V_{gs} - V_t$ is reduced to only 250 mV. It is also important to note that the value of V_t has scaled by 260 mV in these examples going from the 0.6-μm process ($V_t = 935$ mV) to the 0.18-μm process ($V_t = 0.675$ mV). The uncalibrated 14-bit DNL and INL for this example are plotted in Fig. 17. Careful layout of the devices in the main current sources resulted in a raw DNL for a typical device of -2.75 14-bit level LSBs which would be monotonic at the 12-bit level. The raw INL is $+3/-2$ 14-bit level LSBs, which would again provide good yield at the 12-bit level.

In order to ensure optimal differential linearity, the carry from an MSB to the sum of the 9 LSBs should be addressed. A popular way to accomplish this is by subdividing a 32nd current source to provide the remaining 9 lower LSBs of the DAC. A current-splitting array of transistors (sub-DAC) is used in place of a single cascode device as used in an MSB. The sub-DAC splitter is further segmented into a 4-bit thermometer-coded upper segment and binary weighted elements for the 5 LSBs. The current-splitter's gate rail is driven by a control loop separate from that of the MSB cascodes as shown in Fig. 18, closing the loop on the drain of the current source. In this way, all 32 main MSB current source operating points now match even though the effective cascodes, M1 for the MSBs and M2 for the LSBs, have potentially different V_{gs} operating points.

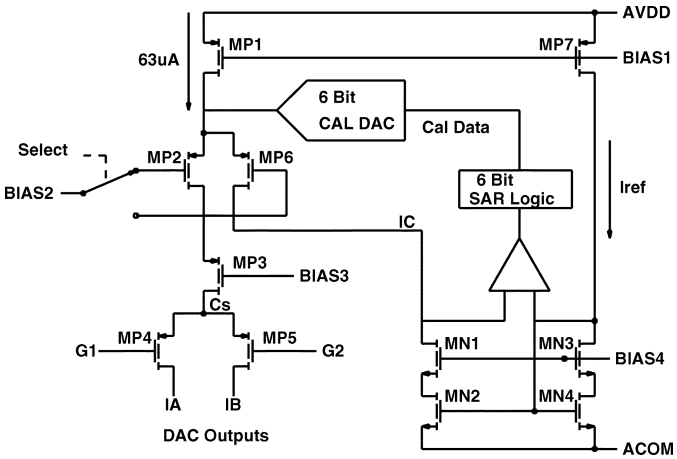

Fig. 19. Static digital storage calibration circuitry.

As a way to improve the DC linearity of this design, a foreground self-calibration capability similar to that reported in [2] has been implemented. Foreground calibration means that the DAC output cannot be used during calibration. In this approach, (Fig. 19), the current source to be calibrated, MP1, is measured against a master reference current from MP7 and the difference adjusted as close to zero as possible through the successive approximation register (SAR) logic and a CAL DAC which injects a small correction current in parallel with the main current source MP1.

The switches MP2 and MP6, which redirect the current either to the output node or the calibration hardware act as first cascode devices [13]. The gates are alternately switched to voltage BIAS2 which will fix the drain voltage of the main current source device, MP1, to be the same in both cases, within the matching of the V_{gs} of the MP2/MP6 cascode switches. This can result in a very accurate calibration. The additional circuitry used for the calibration is static during normal operation and neither consumes power nor injects noise into the main signal path.

The calibration algorithm in its first cycle calibrates the master current from MP7 to be the same as MSB current

Authorized licensed use limited to: Silicon University. Downloaded on October 09,2025 at 07:05:16 UTC from IEEE Xplore. Restrictions apply.

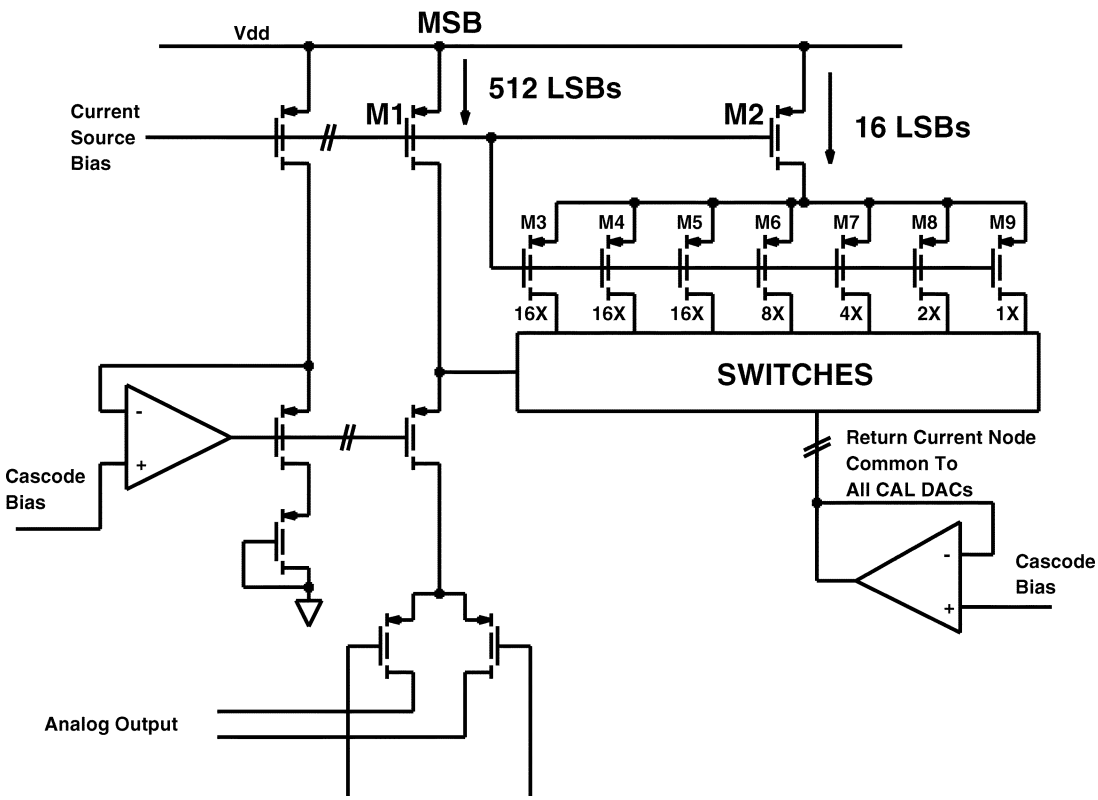

Fig. 20. 6-bit calibration trim DAC.

segment number 1 with its calibration DAC set to midscale. This in effect trims out any systematic offsets from either the nMOS mirror or the voltage comparator. The trim range of the CAL DAC used to adjust the master I_{ref} is twice that of the other CAL DACs to allow for these offsets. In the second cycle, MSB current number 1 is trimmed against the now adjusted master current. This readjustment must be done because, as just indicated, the I_{ref} CAL DAC step size is twice that of all other CAL DACs and may result in a systematic difference between the value of MSB number 1 and the other MSBs. In the following cycles the remaining MSB currents are adjusted in sequence to equal the master current.

The configuration of the 6-bit calibration DAC is shown in Fig. 20. The weight of MSB current M1 is equal to 512 14-bit LSBs. A current equal to 16 LSBs is generated by the combination of M2 and splitting devices M3-9. From the raw DNL plot in Fig. 17 we see a typical DNL of less than 3 LSB. Providing a trim range of ± 8 LSB or $\pm 1.5\%$ is sufficient to cover the worst case matching errors. M2 operates in the linear region and serves as a degeneration resistance for M3-9. These devices are weighted as shown totaling 63 units. Each unit is equal to approximately 1/4 of a 14-bit LSB. To keep the area of M3-9 small and to insure monotonicity at the 6-bit level, the top two bits are thermometer-coded and generated from three equal 16X fractions M3,4,5. Switches are configured to direct the currents to either the drain of M1, thereby increasing the output current of the cell or discarded to a return current node common to all calibration DACs. The voltage to which the discarded currents is returned is forced to be approximately equal to the drain of M1 by a buffer amplifier which is driven from the same cascode bias used in the cascode for M1. This insures that the splitting action is unaffected by how the switches are set.

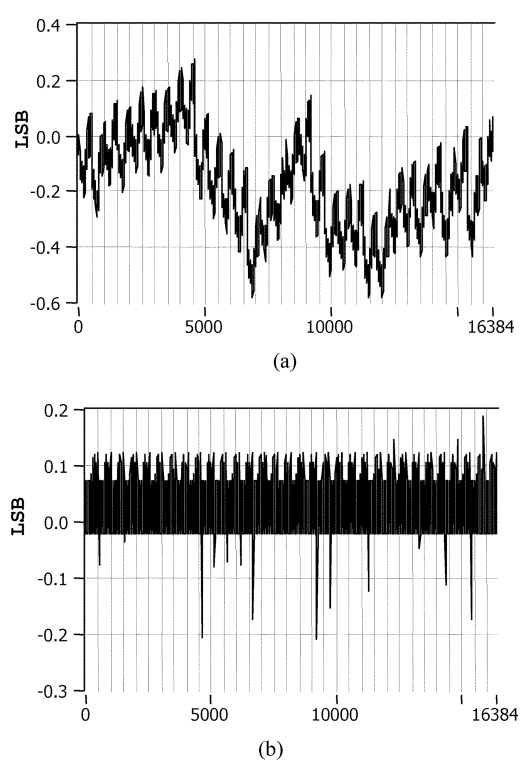

Fig. 21. Calibrated (a) DNL and (b) INL (14 bits).

The DNL and INL after running the on-chip self-calibration cycle is plotted in Fig. 21. The INL has been improved

Authorized licensed use limited to: Silicon University. Downloaded on October 09,2025 at 07:05:16 UTC from IEEE Xplore. Restrictions apply.

TABLE II
PERFORMANCE SUMMARY

Resolution	14 bits
Supply Voltage	3.6V (maximum) to 1.7V (minimum)
Full-Scale Current	2 mA (5mA maximum)
Output Swing	1V (single-ended) and 2V (differential)
Output Common Mode Range	0 to 1.2 V @ 3.3 V
INL / DNL (un-calibrated)	+/- 3 LSB / +/- 2.5 LSB
INL / DNL (calibrated)	+/- 0.6 LSB / +/- 0.25 LSB
Maximum Sample Rate	100 MSPS @ 1.8 V 225 MSPS @ 3.3 V
Single-Tone SFDR @ 200MS/s	86 dBc @ fout = 1 MHz 71 dBc @ fout = 50 MHz
Two-Tone IMD @ 175MS/s	>75dBc @ fout1=70.5 MHz, fout2=71.5 MHz,
Current – Analog Section	2.5mA + full-scale current
Current – Digital + Clock section	29 uA / MSPS @ 1.8 V 73 uA / MSPS @ 3.3 V
Total Die Area	1.5mm X 1.5mm , 0.18u 1P4M CMOS

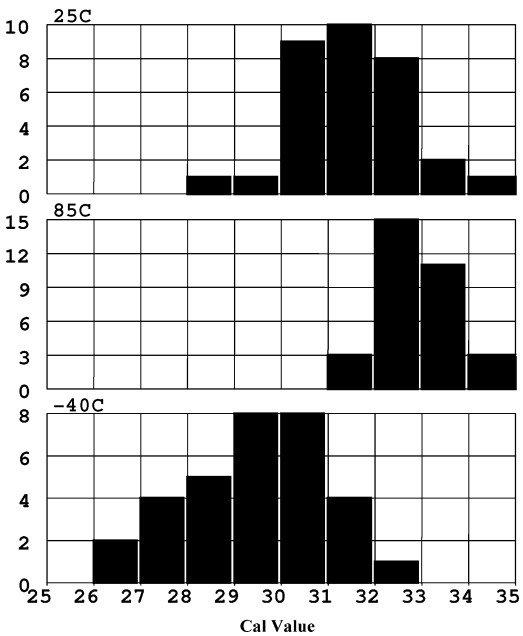

Fig. 22. Histogram of calibration DAC values.

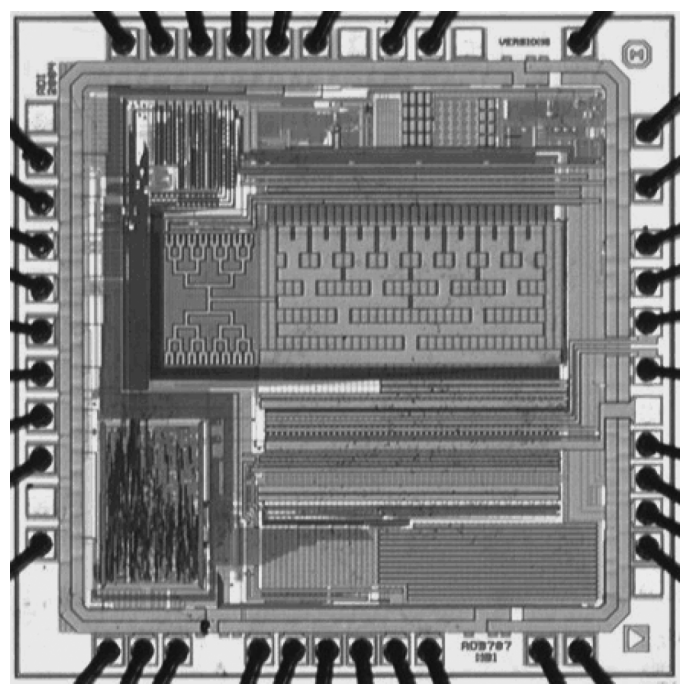

Fig. 23. Die microphotograph.

to $+0.3/-0.6$ 14-bit LSBs, the DNL has been improved to $+0.2/-0.25$ 14-bit LSBs, and the DAC is now monotonic at the 14-bit level.

After self-calibration, the digital contents of the calibration DAC memories can be read out of the device. A typical device was self-calibrated at three temperatures, 25 °C, 85 °C and −40 °C. The histograms of the 32 values are plotted in Fig. 22. The 25 °C distribution is 7 codes wide with three codes only having one instance. The 85 °C distribution is tighter at four codes wide with all but six instances falling in two codes. A wider (seven codes) distribution is seen at −40 °C. Based on the spread in the distribution it can be estimated that the DNL will drift approximately 0.75 LSB over temperature. The 6-bit CAL DAC has 63 codes of range, however the trim range needed over the full temperature range is less than 10 codes. The center of the distribution shifted over temperature and this is most likely due to minor shifts in the offset calibration done in the first cycle. We can also see that the range of mismatch errors decreases with increasing temperature in part due to the temperature dependence of mobility.

VIII. RESULTS SUMMARY AND CONCLUSION

A low-power but high performance DAC was fabricated on a standard 0.18-μm, one-poly four-metal (1P4M) CMOS process. An on-chip self-calibration structure was used to achieve true 14-bit accuracy. New circuit techniques were used which resulted in AC distortion performance equal to high output signal level DACs with power dissipation as much as 10 times larger. Use of mixed voltage process options allowed the flexibility to interface with other parts of the signal chain which may require that the output signal common mode voltage be as much as 1.2 V with 3.3-V supply operation. The full die size including bond pads, interface and all supporting blocks was 1.5 mm × 1.5 mm. The overall results, for the device housed in a 32-pin LFCSP package, are summarized in Table II. The die photo is shown in Fig. 23.

Authorized licensed use limited to: Silicon University. Downloaded on October 09,2025 at 07:05:16 UTC from IEEE Xplore. Restrictions apply.

ACKNOWLEDGMENT

The author would like to acknowledge the following people: R. Adams, L. St. Onge, G. Braun, R. Sullivan, and R. Gambiza for their contributions to this work.

REFERENCES

[1] D. Mercer and L. Singer, "12-b 125 MSPS CMOS D/A designed for spectral performance," in *Proc. IEEE Int. Symp. Low Power Electronics and Design (ISLPED)*, 1996, pp. 243–246.

[2] W. Schofield, D. Mercer, and L. St. Onge, "A 16 b 400 MS/s DAC with < -80 dBc IMD to 300 MHz and < -160 dBm/Hz noise power spectral density," in *IEEE Int. Solid-State Circuits Conf. (ISSCC) Dig. Tech. Papers*, 2003, pp. 126–127.

[3] B. Schafferer and R. Adams, "A 3V CMOS 400mW 14b 1.4GS/s DAC for multi-carrier applications," in *IEEE Int. Solid-State Circuits Conf. (ISSCC) Dig. Tech. Papers*, 2004, p. 360.

[4] M. Tiilikainen, "A 14-bit 1.8-V 20-mW 1-mm^2 CMOS DAC," *IEEE J. Solid-State Circuits*, vol. 36, no. 7, pp. 1144–1147, Jul. 2001.

[5] J. Deveugele and M. Steyaert, "A 10 b 250 MS/s binary-weighted current-steering DAC," *IEEE J. Solid-State Circuits*, vol. 41, no. 2, pp. 320–329, Feb. 2006.

[6] A. Van den Bosch, M. Steyaert, and W. Sansen, "SFDR-bandwidth limitations for high-speed high-resolution current-steering CMOS D/A converters," in *Proc. IEEE Int. Conf. Electronics, Circuits and Systems*, 1999, pp. 1193–1196.

[7] AD9754 Data Sheet. Analog Devices.

[8] D. Mercer, "A study of error sources in current steering digital-to-analog converters," in *Proc. IEEE Custom Integrated Circuits Conf. (CICC)*, 2004, pp. 185–190.

[9] D. Mercer, "A low power current steering digital to analog converter in 0.18 micron CMOS," in *Proc. IEEE Int. Symp. Low Power Electronics and Design (ISLPED)*, 2005, pp. 72–77.

[10] D. Mercer, "Latch with data jitter free clock load," U.S. Patent 7,023,255, Apr. 4, 2006.

[11] AD9744 Data Sheet. Analog Devices.

[12] D. Mercer, "A 16 b D/A converter with increased spurious free dynamic range," *IEEE, J. Solid-State Circuits*, vol. 29, no. 10, pp. 1180–1185, Oct. 1994.

[13] D. Mercer and W. Schofield, "Calibrated current source," U.S. Patent 6,583,740, Jun. 24, 2003.

[14] Y. Cong and R. Geiger, "A 1.5 V 14-bit 100 MSPS self-calibrated DAC," *IEEE J. Solid-State Circuits*, vol. 38, no. 12, pp. 2051–2060, Dec. 2003.

[15] D. Mercer and W. Schofield, "Current DAC code independent switching," U.S. Patent 6,768,438, Jul. 27, 2004.

[16] D. Mercer, D. Reynolds, D. Robertson, and E. Stroud, "Skewless differential switch and DAC employing the same," U.S. Patent 5,689,257, Nov. 18, 1997.

Douglas A. Mercer (M'80) received the B.S.E.E degree from Rensselaer Polytechnic Institute, Troy, NY, in 1977.

He has 30 years experience in the linear IC industry in the design and development of high-resolution and high-speed DAC and ADC products. Since joining Analog Devices in 1977, he has contributed directly or indirectly to more than 30 commercial data converter products. He holds 13 patents. He has authored or co-authored numerous papers at various technical conferences and in the IEEE JOURNAL OF SOLID-STATE CIRCUITS. Appointed to the position of ADI Fellow in 1995, he is currently assigned to the High Speed Conversion group within Analog Devices.

Authorized licensed use limited to: Silicon University. Downloaded on October 09,2025 at 07:05:16 UTC from IEEE Xplore. Restrictions apply.