Digital Design 101 | 2026-1

Session3 : Gate Level Modeling

1. Module and Instance

Module: Definition

- ◆Module
  - ◆Verilog에서 기본적인 설계 블록
  - ◆상위 블록에 필요한 기능들을 제공

→ Hierarchical Structure | Design Methodology

  - ◆In/output의 포트 인터페이스를 제공하고 내부 상황은 은닉시킴

→ abstraction / encapsulation

  - ◆특정한 object가 만들어지는데 template을 제공함(module invocation)

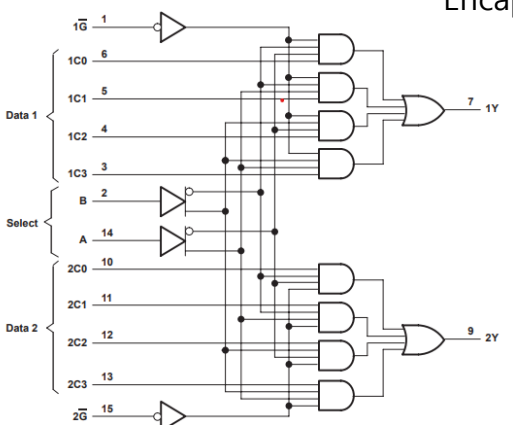

Symbolization / Encapsulation

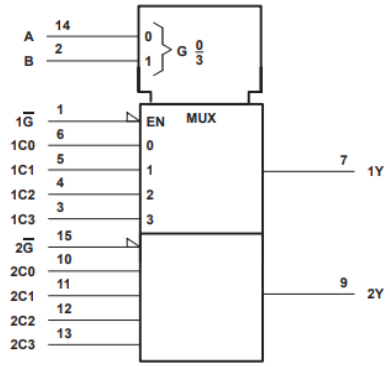

Source: TI, SN54ALS153, Dual 1-of-4 Data Selectors

Modularization / Hardware Descripting

```
/*
Module Name: 4 X 1 multiplexor
Date Created: 20-Aug-2023
Author: William Woo
Logic: out = (~sel1 & ~sel0 & in1) | (~sel1 & sel0 & in2) |
             (sel1 & ~sel0 & in3) | (sel1 & sel0 & in4);
Revision: v0.1
*/

module mux4_to_1 // 4 to 1 multiplexor
(out, // 1bit output
in1,  // 1bit input1
in2,  // 1bit input2
in3,  // 1bit input3
in4,  // 1bit input4
sel1, // 1bit selection1
sel0); // 1bit selection2

// port declaration
output wire out;
input wire in1, in2, in3, in4;
input wire sel0, sel1;

// data flow statement
assign out = (~sel1 & ~sel0 & in1) | (~sel1 & sel0 & in2) |
             (sel1 & ~sel0 & in3) | (sel1 & sel0 & in4);


endmodule // finish describing the module
```

Module: component & skeleton

module NAME
(port list
);

port declaration

Modeling

endmodule

```
module module_name (

    // emumerate port list
    in_a,
    in_b,
    out_s
);

// port declaration
input wire in_a;
input wire in_b;
output [3:0] out_s;

// Data flow statement
assign =

// Behavioral statement
// 1. always block
always @() begin

end

// 2. initial block
initial begin

end

endmodule
```

Instance: Concept

Instance

- Module을 이용하여 실제로 구현된 객체(object)
- Module → 조리법(template) | Instance → 실제 음식(조립)
- Instantiation: Module이 Instance로 만들어지는 것. 상위 module에서 하위 module을 계층적으로 불러오는 것(invocation)
- 실제적인 이름, 변수, 파라미터 및 I/O Interface를 가짐

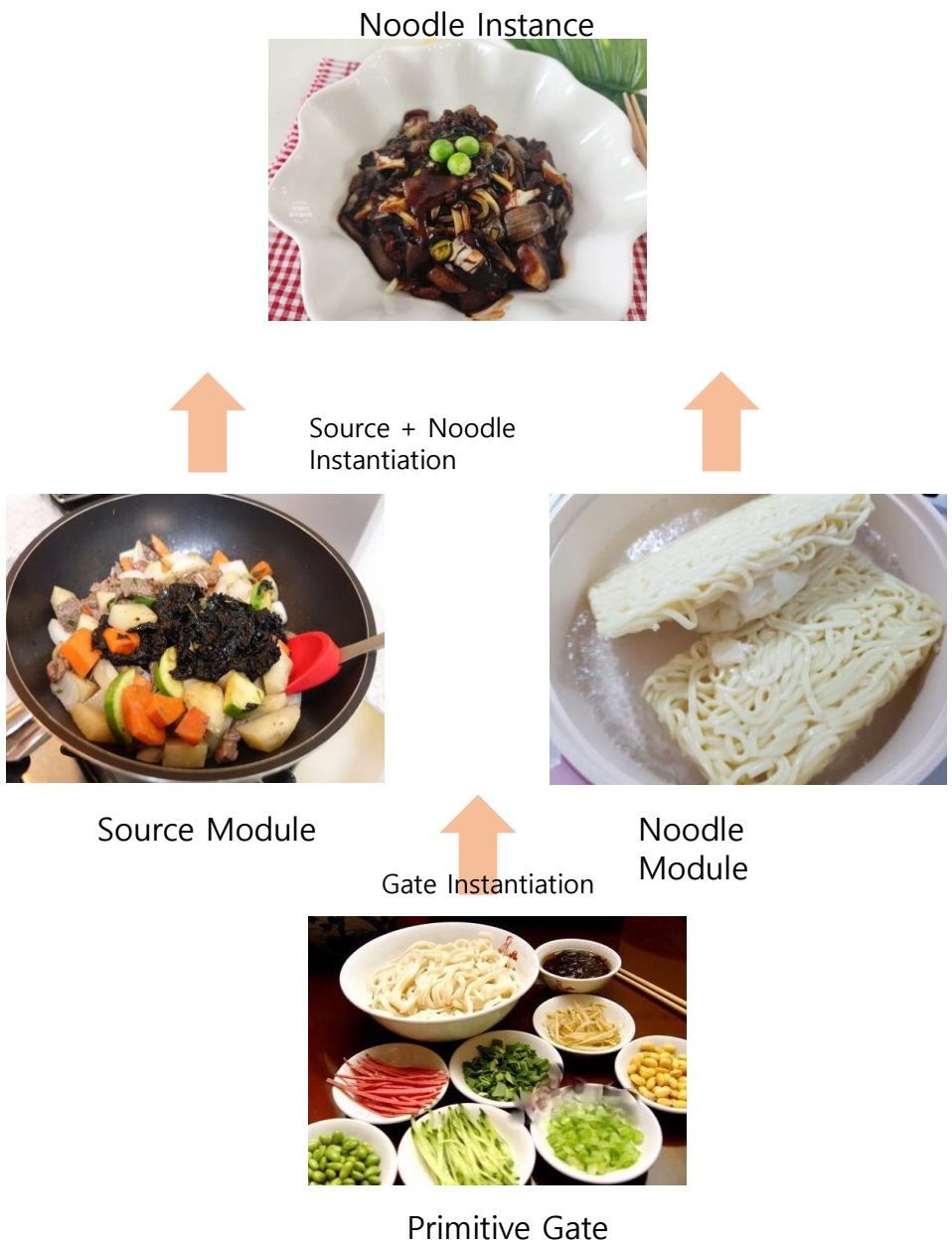

Instantiation

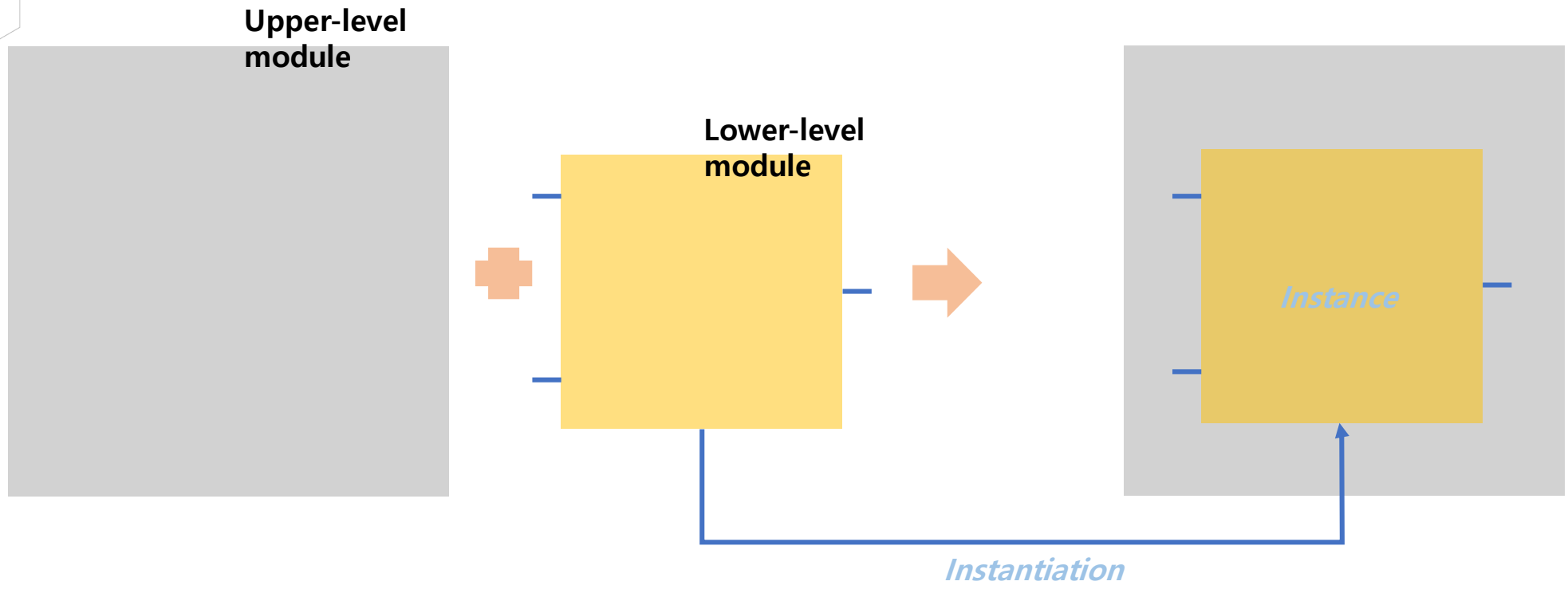

2. Testbench

Testbench

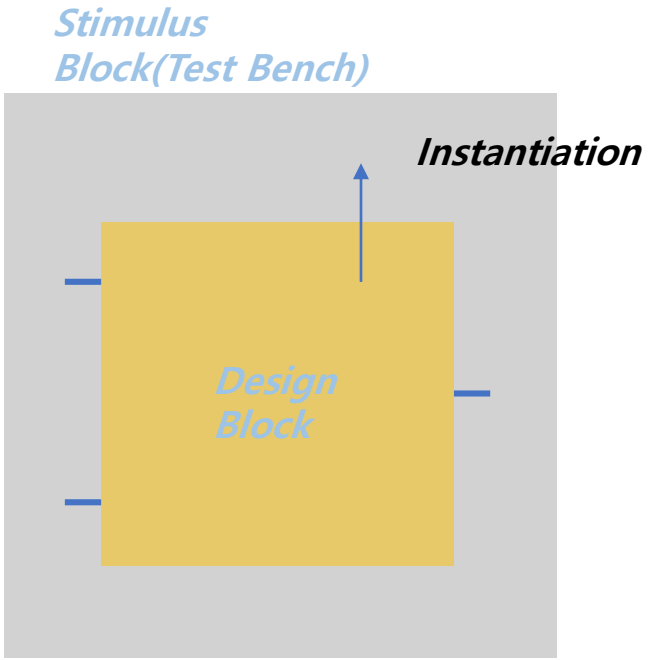

- Design Block
  - 설계 모듈 블록
  - DUT = Design Under Test
- Stimulus Block
  - DUT를 테스트하고 로직의 결과를 확인하는 블록
  - Testbench 라고도 불림

Testbench by example

```
1   module stimulus;
2   reg clk; // Input
3   reg reset; // Input
4   wire [3:0] q; // Output
5
6   ripple_carry_counter r1 (.q(q), .clk(clk), .reset(reset));
7   initial
8   clk = 1'b0; // Set clk to 0
9   always
10  #5 clk = ~clk; // Toggle clk every 5 time units
11  initial
12  begin
13  reset = 1'b1;
14  #25 reset = 1'b0;
15  #180 reset = 1'b1;
16  #10 reset = 1'b0;
17  #20 $finish;
18  end
19
20  initial
21  $monitor($time, "Output q = %d", q);
22  endmodule
```

DUT instantiation

Clock Generation

Apply stimulus

Check Result

3. Gate Level Modeling

Abstraction Level

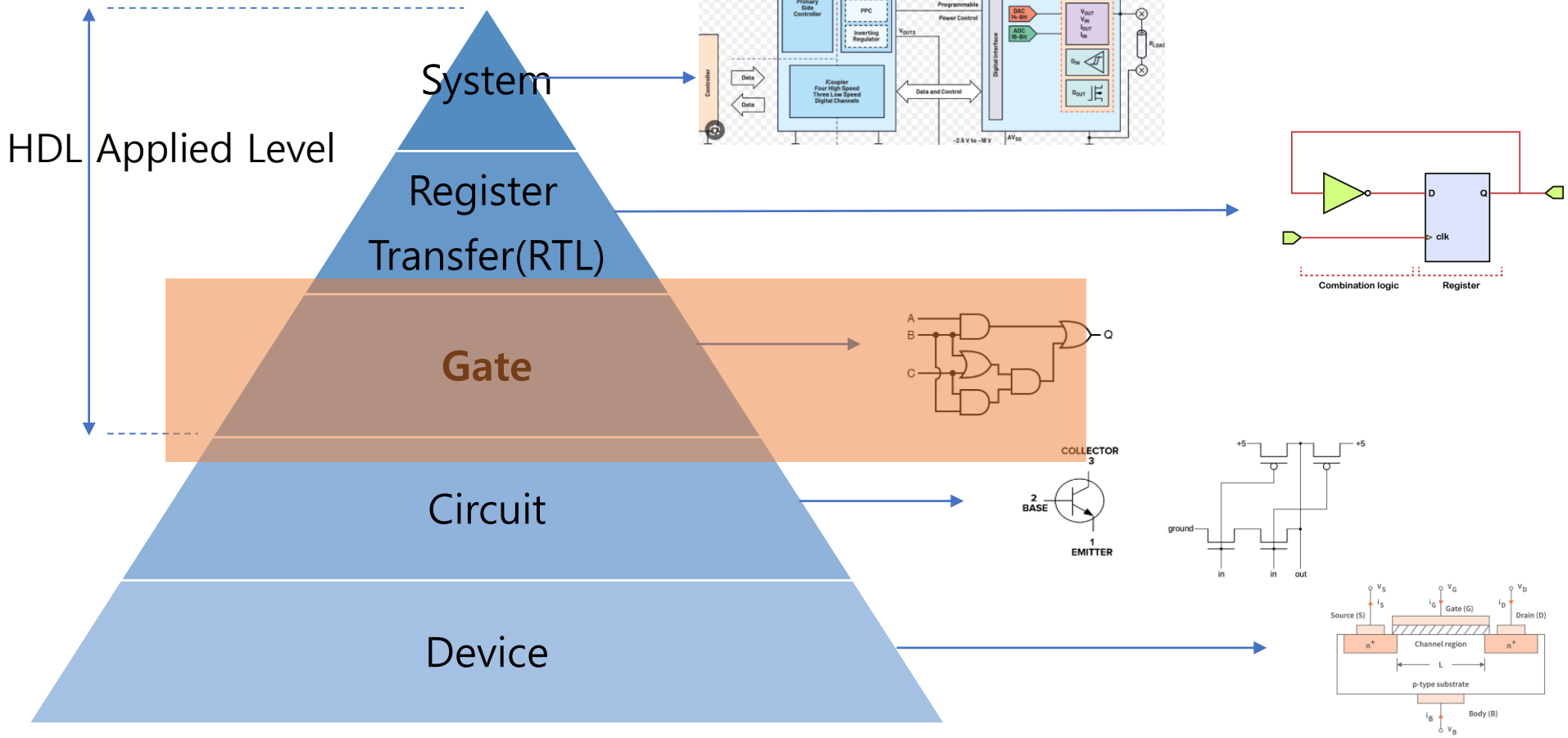

Gate-level Modeling

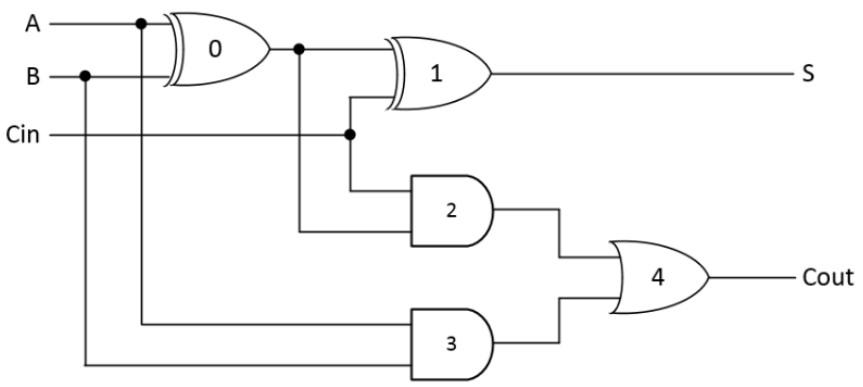

=

```
module full_adder_gatelevel_module (a, b, cin, sum, cout);
    input a, b, cin;
    output sum, cout;


    // xor_out_1 and xnor_out_2 is not used
    // wire xor_out_1;
    wire xnor_out_1;
    // xnor_out_2;
    // wire not_out_1;

    wire and_out_1, and_out_2, and_out_3;
    wire or_out_1;

    //sum = (a⊙b)⊙(cin)
    //Fill this out
    xnor_gatelevel_gate xnor_1 (.a(a), .b(b), .out(xnor_out_1));
    xnor_gatelevel_gate xnor_2 (.a(xnor_out_1), .b(cin), .out(sum));

    //cout = b(cin) + a(cin) + ab
    //Fill this out
    and_gate and_1 (.a(b), .b(cin), .out(and_out_1));
    and_gate and_2 (.a(a), .b(cin), .out(and_out_2));
    and_gate and_3 (.a(a), .b(b), .out(and_out_3));

    or_gate or_1 (.a(and_out_1), .b(and_out_2), .out(or_out_1));
    or_gate or_2 (.a(or_out_1), .b(and_out_3), .out(cout));

endmodule
```

- Gate-level modeling
  - 게이트 및 연결관계를 직관적으로 표현
  - Gate Schematic과 HDL module이 1:1로 대응

Types of Gate: Overview

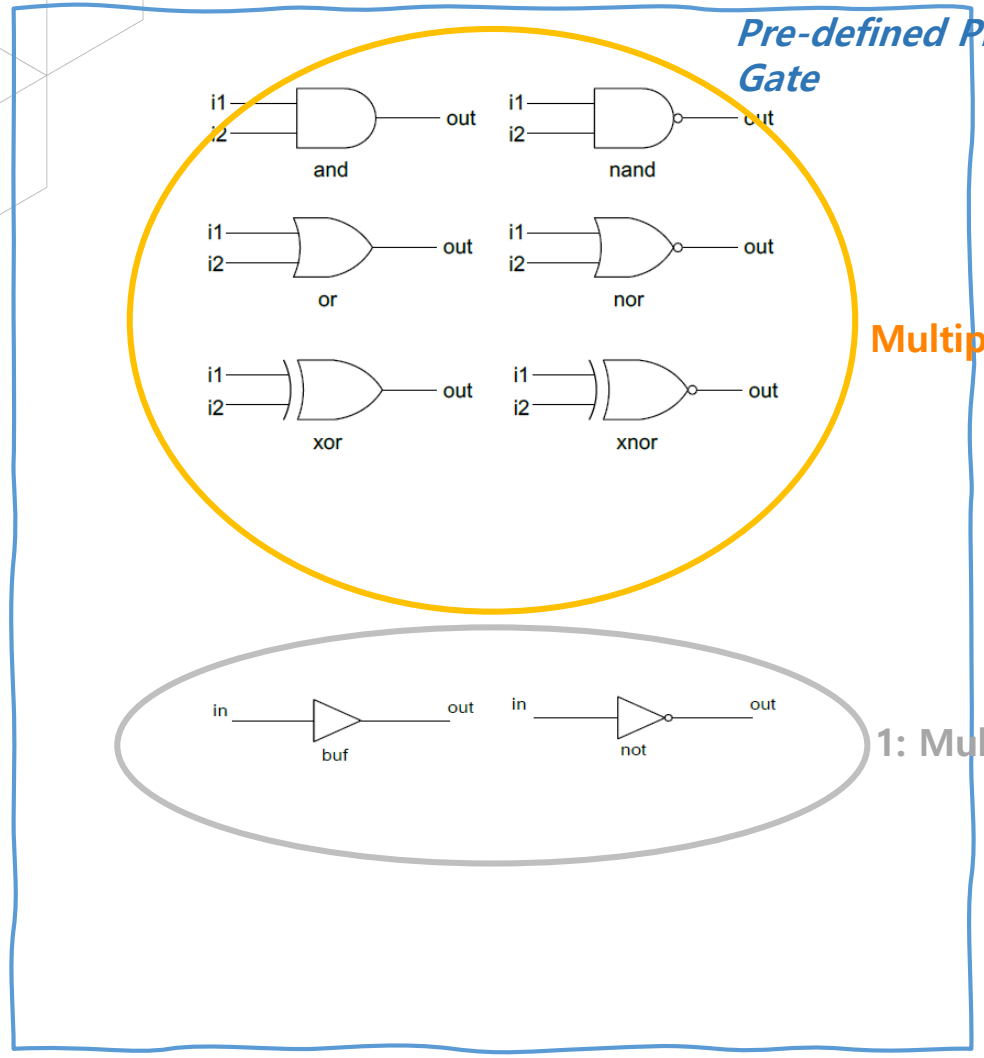

- Instantiation like a module
- Module define (X)
- Minimal units for logic circuits

- Input: Multiple Scalar
- Output: one Scalar

- Input: One Scalar
- Output: Multiple Scalar

Types of Gate: Multiple to 1 Gate

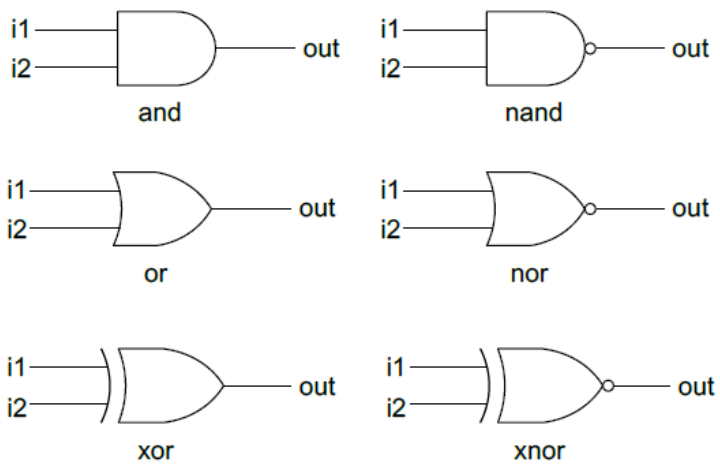

=

```
wire out, i1, i2, i3;


// formal gate instantiation
and and1    (out, i1, i2);
nand nand1  (out, i1, i2);
or or1      (out, i1, i2);
nor nor2    (out, i1, i2);
xor xor2    (out, i1, i2);
xnor xnor2  (out, i1, i2);


// n-input gate
and and3    (out, in1, in2, in3);


// instantiation without name
or          (out, in1, in2, in3);
```

Gate Instance_Name (OUTPUT, INPUT1, INPUT2, ...)

Types of Gate: 1 to Multiple

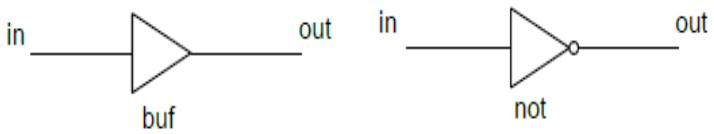

=

```
wire out1, out2, in;


// formal gate instantiation
buf buf1    (out1, in);
not not1    (out1, in);

// N-output gate
buf buf2    (out1, out2, in);

// instantiation without name
not         (out2, in);

```

Gate Instance_Name (OUTPUT1, OUTPUT2, … , INPUT)

LAB

1. Download Datasheet
2. DUT design(Gate Level)
3. Stimulus design(no clock)
4. Run simple simulation(single step)