SoC 101 | 2026-1

Session1 : Historical Background Semiconductor Design Development

CHIP WAR

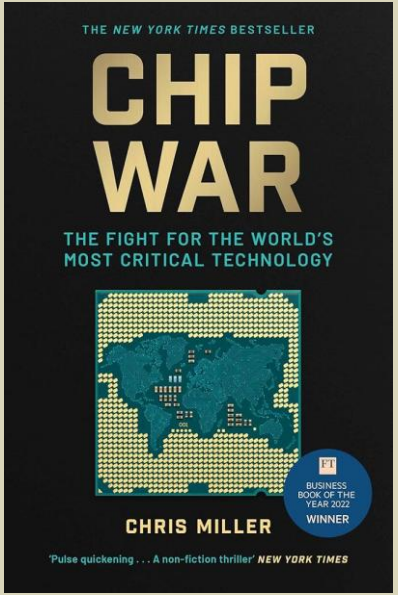
THE NEW YORK TIMES BESTSELLER
CHIP WAR
THE FIGHT FOR THE WORLD'S MOST CRITICAL TECHNOLOGY
FT
BUSINESS BOOK OF THE YEAR 2022
WINNER
CHRIS MILLER
'Pulse quickening . . . A non-fiction thriller' NEW YORK TIMES

Economics of Scale

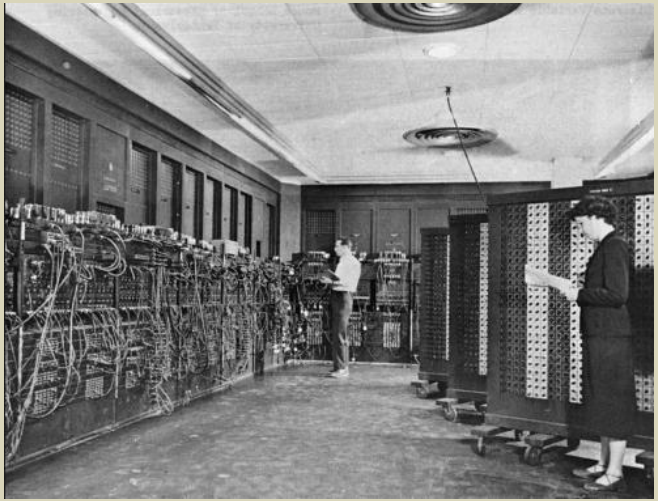

Source : IBM

Moore’s Law

intel

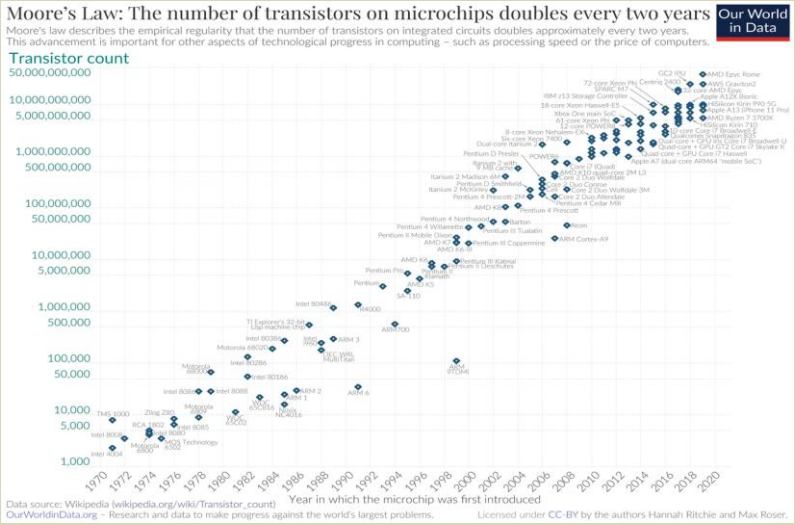
Moore’s Law: The number of transistors on microchips doubles every two years
Moore’s law describes the empirical regularity that the number of transistors on integrated circuits doubles approximately every two years.
This advancement is important for other aspects of technological progress in computing – such as processing speed or the price of computers.
Our World in Data
Transistor count
50,000,000,000
10,000,000,000
5,000,000,000
1,000,000,000
500,000,000
100,000,000
50,000,000
10,000,000
5,000,000
1,000,000
500,000
100,000
50,000
10,000
5,000
1,000
1970
1972
1974
1976
1978
1980
1982
1984
1986
1988
1990
1992
1994
1996
1998
2000
2002
2004
2006
2008
2010
2012
2014
2016
2018
2020
Year in which the microchip was first introduced
Data source: Wikipedia (wikipedia.org/wiki/Transistor_count)
OurWorldinData.org – Research and data to make progress against the world’s largest problems.
Licensed under CC-BY by the authors Hannah Ritchie and Max Roser.

Drive momentum

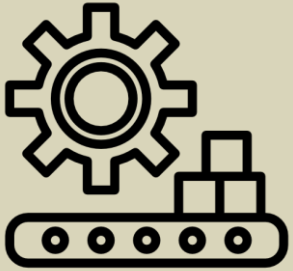

Early Designer : Handcrafting

Source: General Motors

Early Designer : Schematic Capture

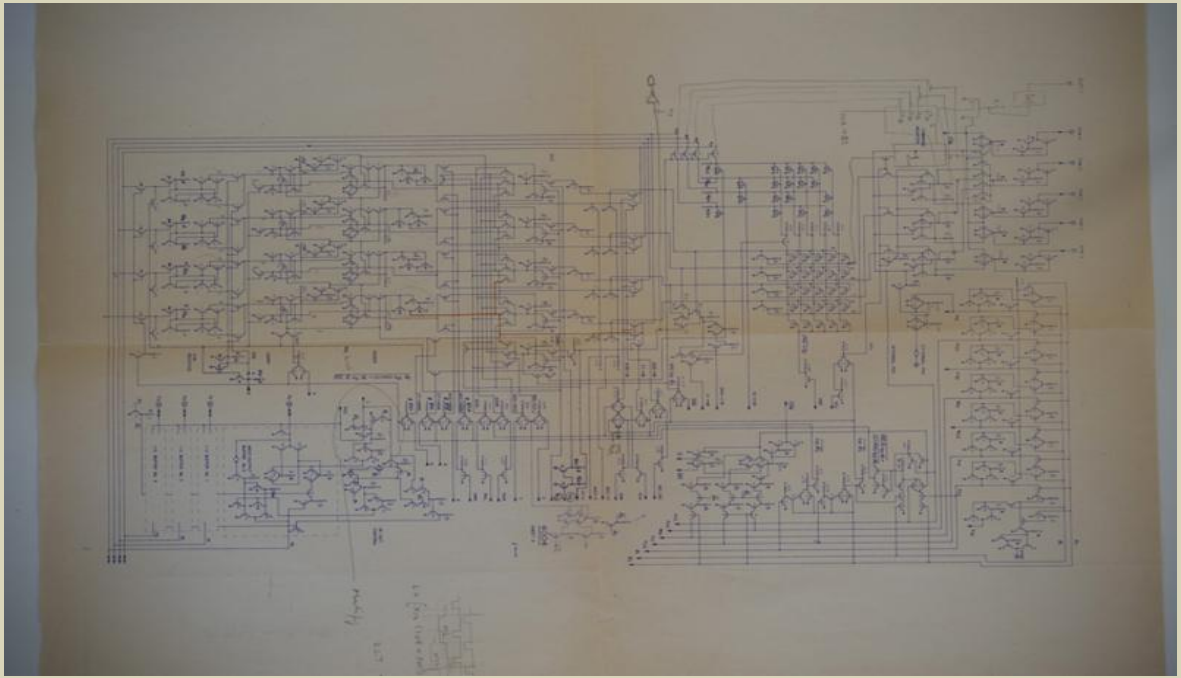

Source: Intel 4004(Memory Block, Hand Written Schematic, 1 of 3 pages, drawn by Federico

Early EDA System

1966, IBM360/37 mainframe-powered CAD at Fairchild

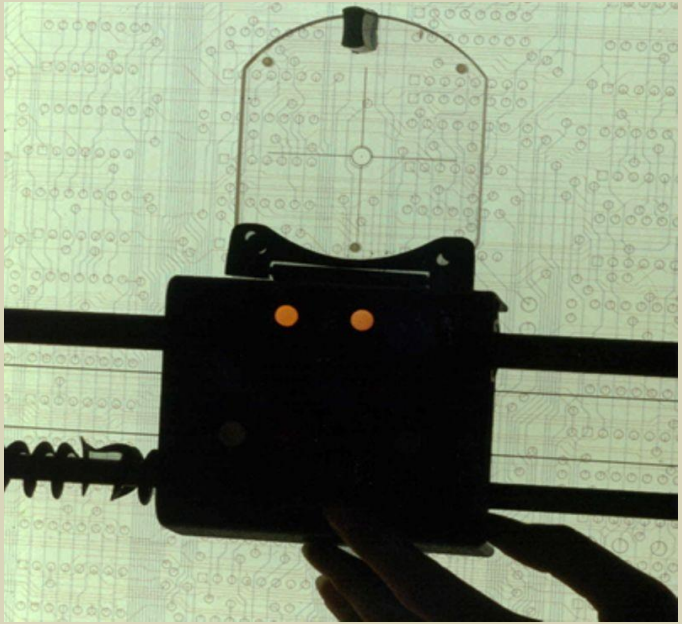

Mask layout drawing hand digitizing system at Intel

Software Revolution

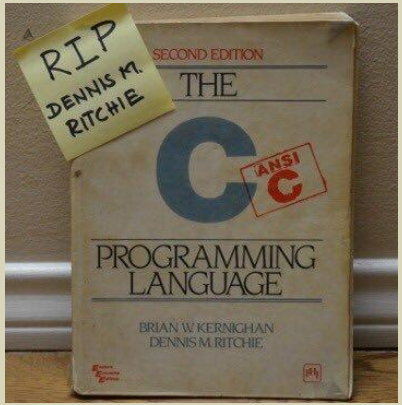

TCPL: The C Programming Language

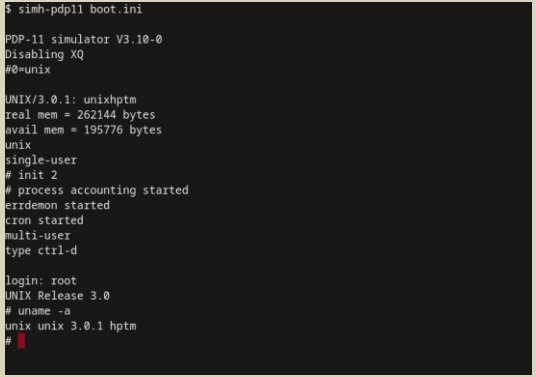

UNIX running on PDP-11

Contribution

```
; This program displays "Hello, World!" in a windows messagebox and then quits.
;
; Written by Stewart Moss - May 2006
;
; Assemble using TASM 5.0 and TLINK32
;
; The output EXE is standard 4096 bytes long.
; It is possible to produce really small windows PE exe files, but that
; is outside of the scope of this demo.

        .486p
        .model  flat,STDCALL
include  win32.inc

extrn           MessageBoxA:PROC
extrn           ExitProcess:PROC

.data

HelloWorld db "Hello, world!",0
msgTitle db "Hello world program",0

.code
Start:
        push    MB_ICONQUESTION + MB_APPLMODAL + MB_OK
        push    offset msgTitle
        push    offset HelloWorld
        push    0
        call    MessageBoxA

        push 0
        call ExitProcess
ends
end Start
```

```
#include <stdio.h>

int main()
{
    printf("Hello, world!\n");
}
```

Early ECAD System

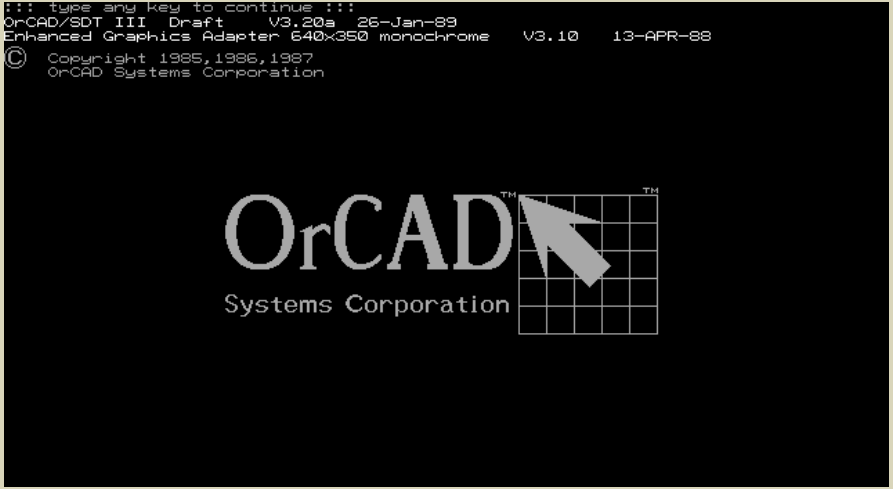

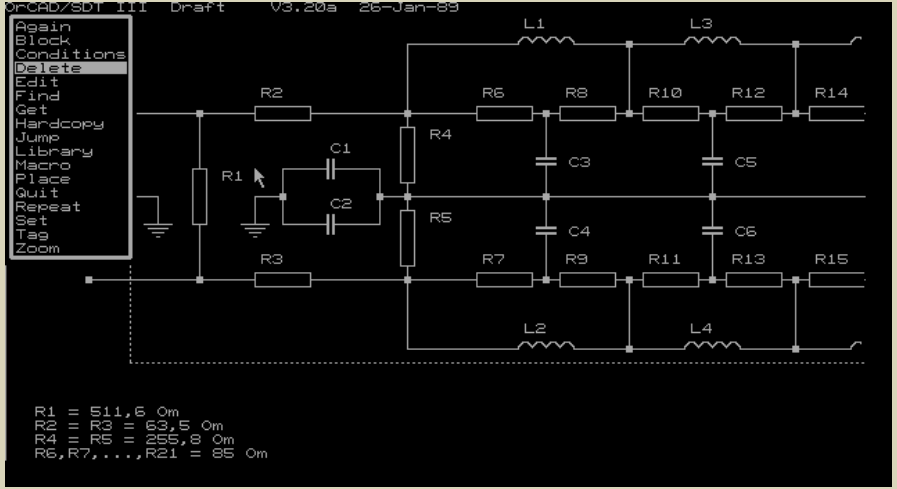

Hardware Descriptive Language

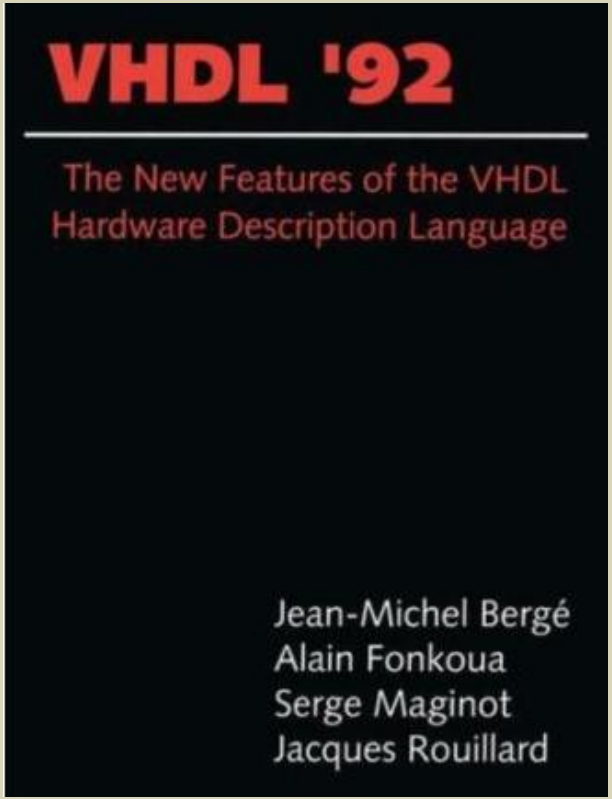

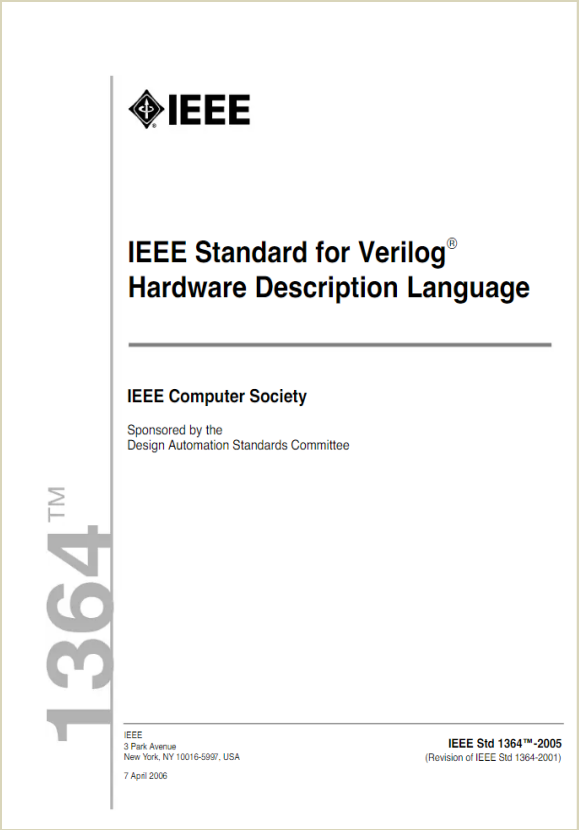

Semiconductor Fabrication

Full-custom IC
Analog IC

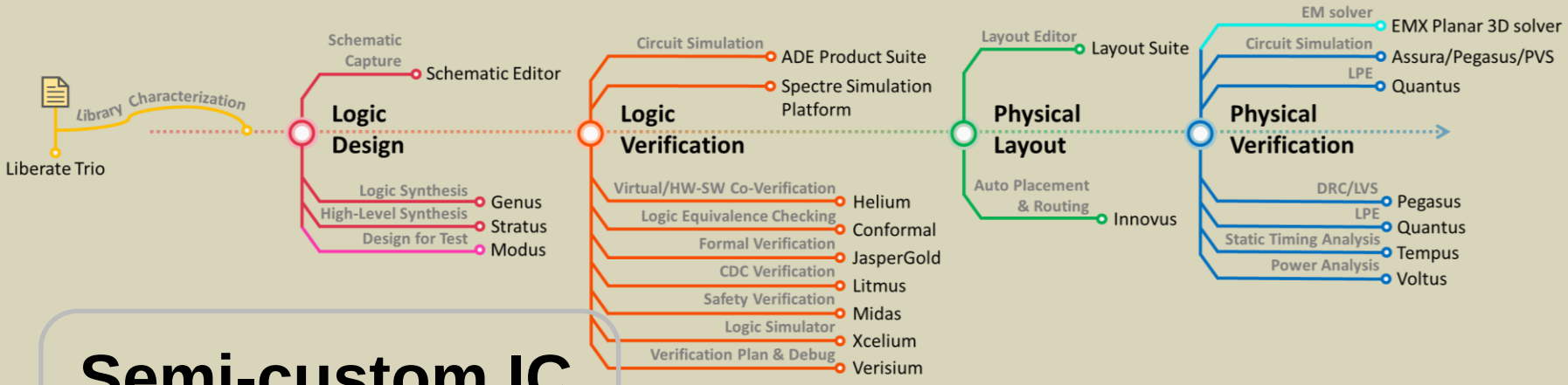

Semi-custom IC
Digital IC

Diverse Viewpoint to view semiconductor

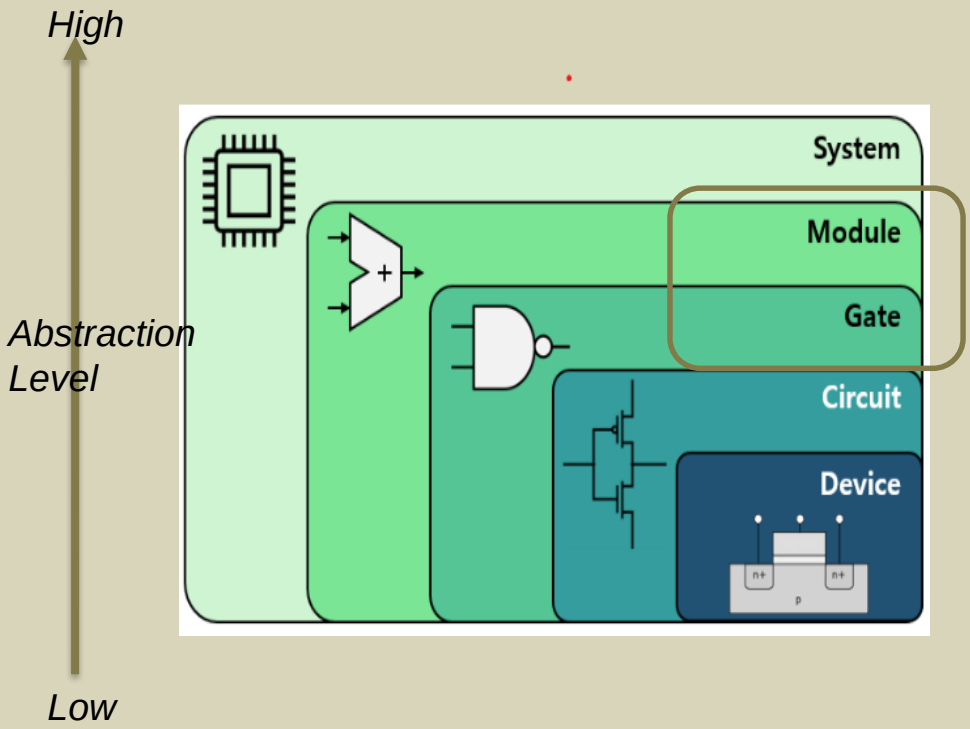

- Device Level : 소자의 연구
- Circuit Level : TR 기반의 회로설계
- Gate Level : Logic Gate Netlist
- RTL Level : 레지스터간 데이터 흐름/논리연산모델링기반 설계
- System Level : 시스템 모듈 및 인터페이스를 통한 전체 시스템 설계

Full Custom Design(1)

- Full Custom IC
  - Circuit Level Design(Handcraft)
  - Transistor / Resistor / Capacitor 기반

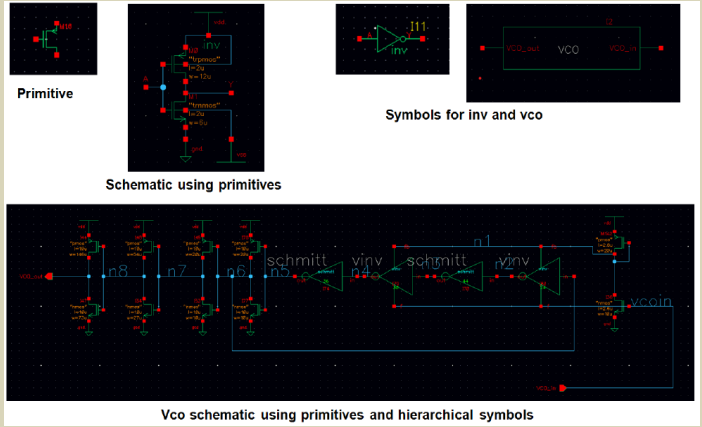

Logic Design

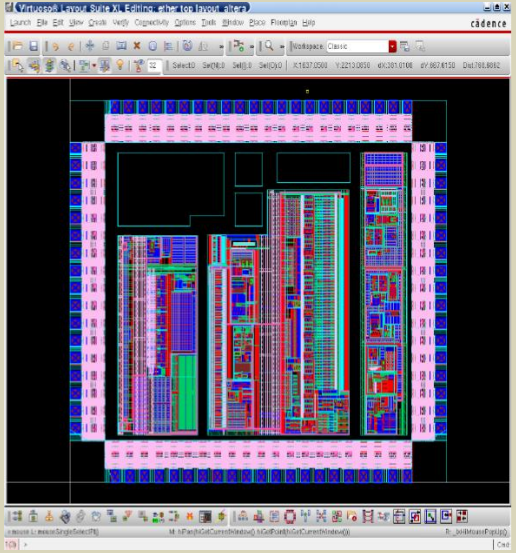

Physical Implementation: Layout

Full Custom Design(2)

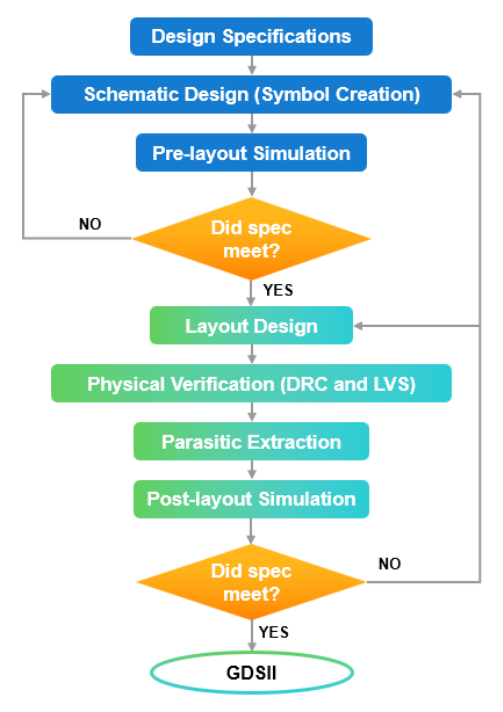

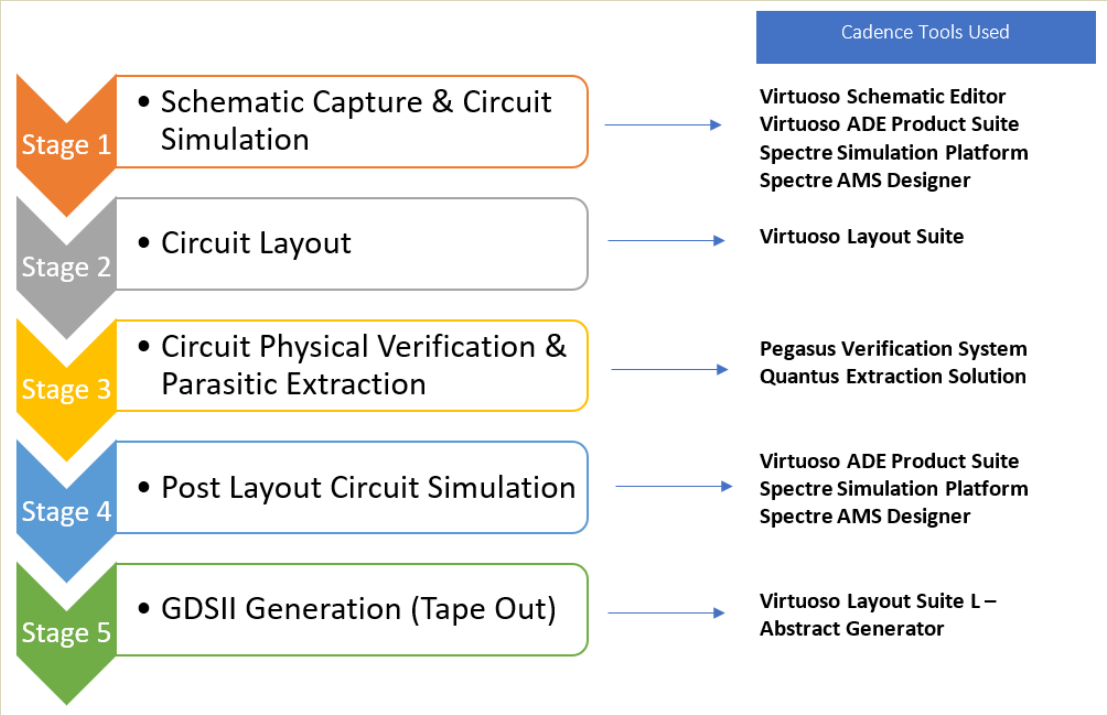

Semi Custom Design(1)

- Semi Custom IC(Cell Based Design)
  - RTL Level에서 설계 진행
  - Standard Cell 기반

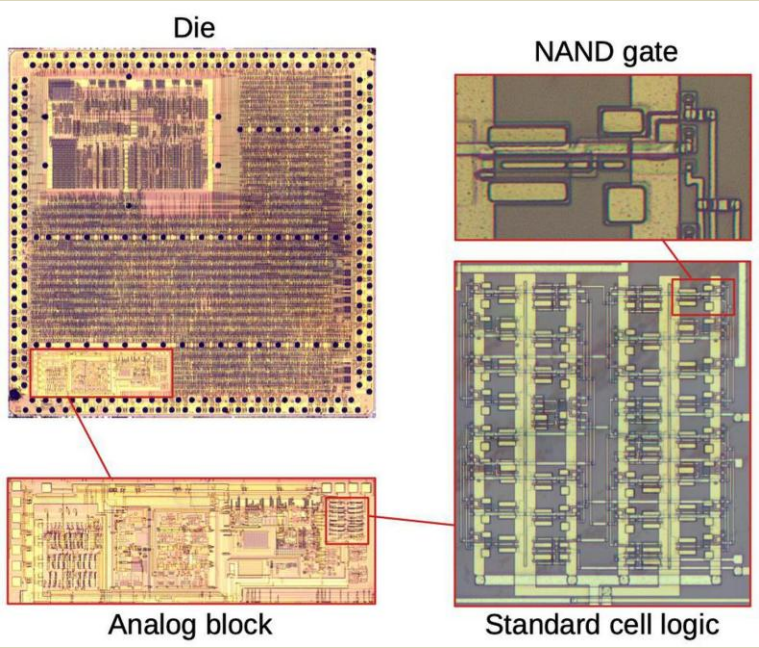

Source: IBM

Semi Custom Design(2)

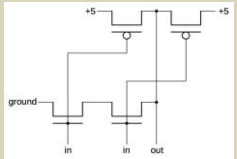

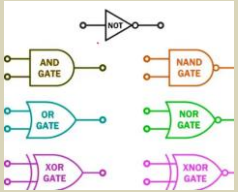

Standard
Cell Library

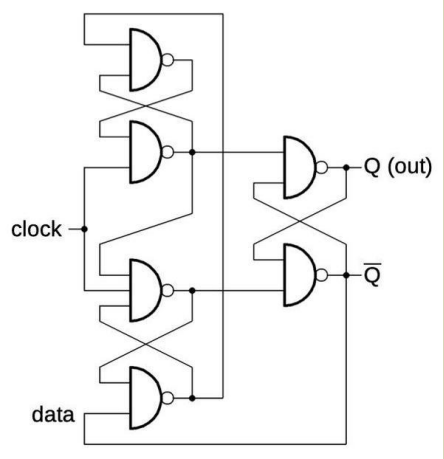

Logic HW Design

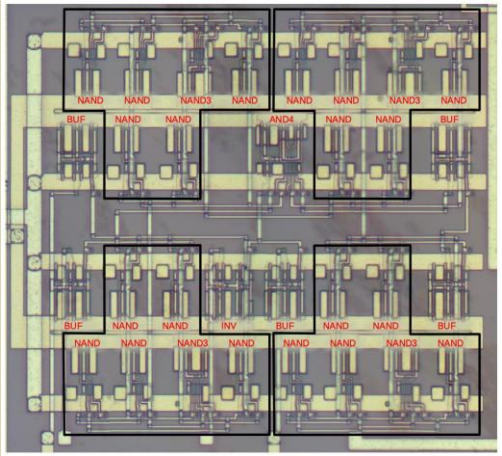

Implementation: Auto
Place & Route(APR)

Semi Custom Design(3)

```
module mux4_to_1
(out, i0, i1, i2, i3, s1, s0);

output wire out;
input wire i0, i1, i2, i3;
input wire s0, s1;

assign out = (~s1 & ~s0 & i0) | (~s1 & s0 & i1) |
             (s1 & ~s0 & i2) | (s1 & s0 & i3);

endmodule
```

HDL Logic Design

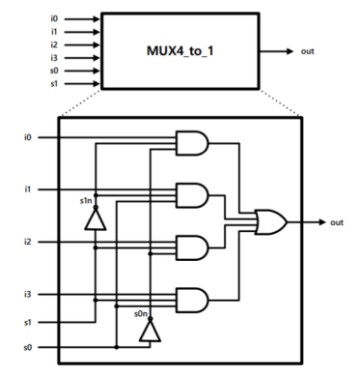

Logic Synthesis

Back End

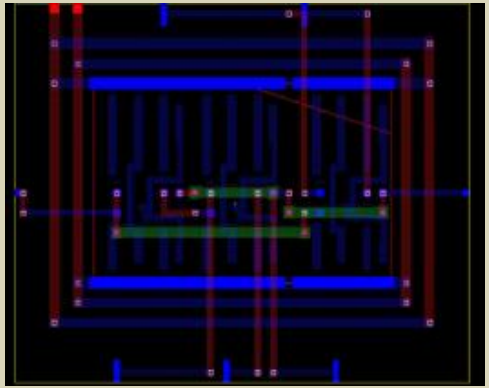

Physical Implementation :
Auto Place & Route

Front End

Semiconductor Fabrication

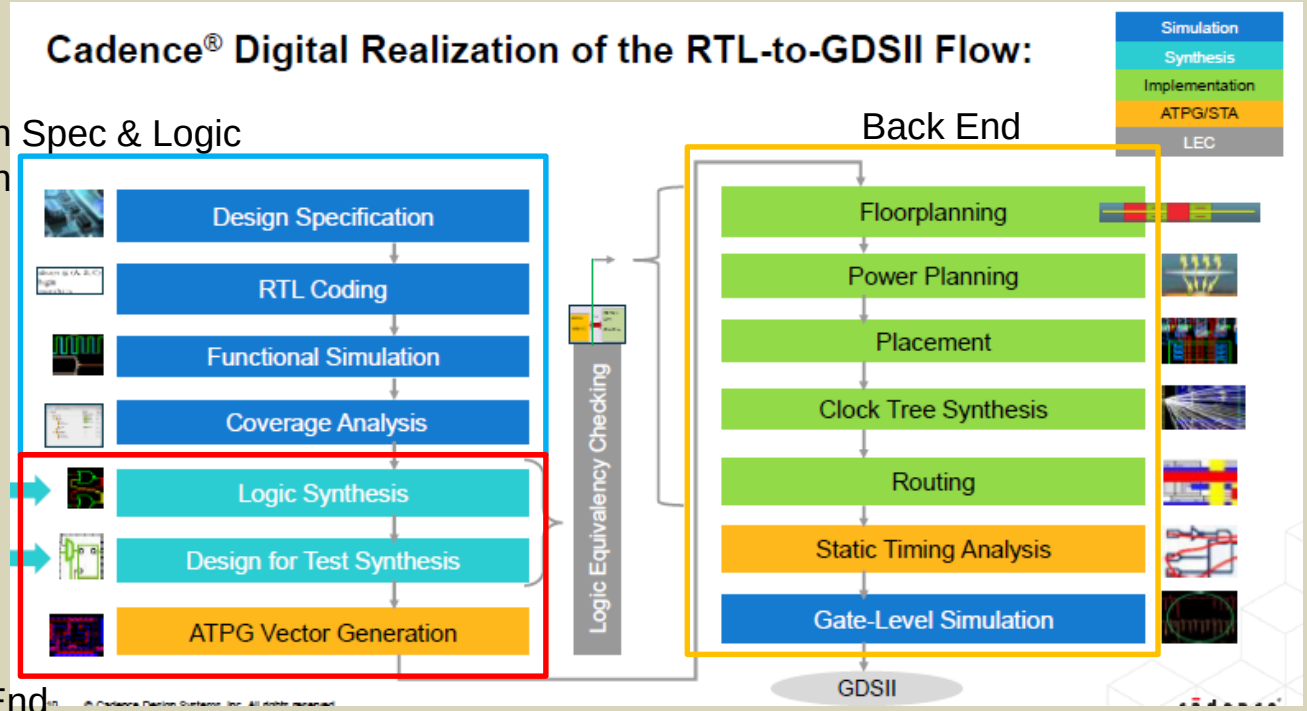

Source: Cadence

Full Custom VS Semi Custom

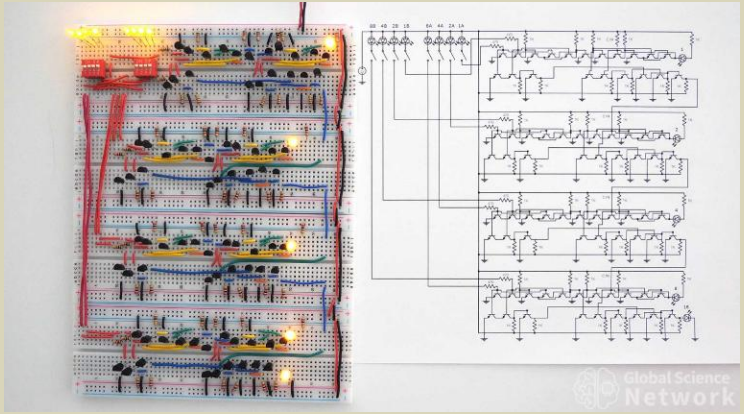

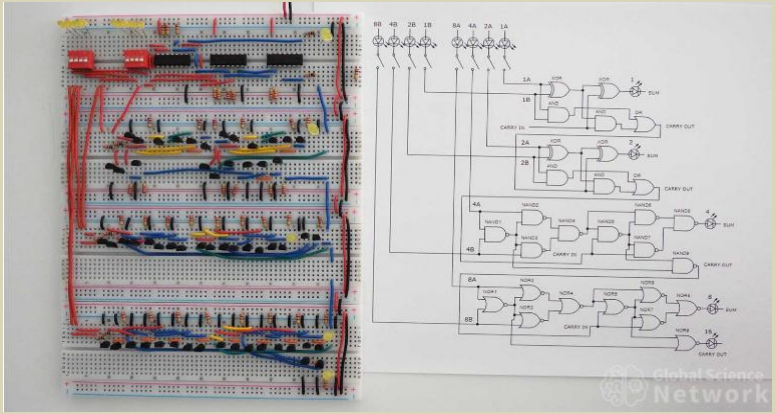

Source: Global Science Network

Field Programmable Gate Array(FPGA)
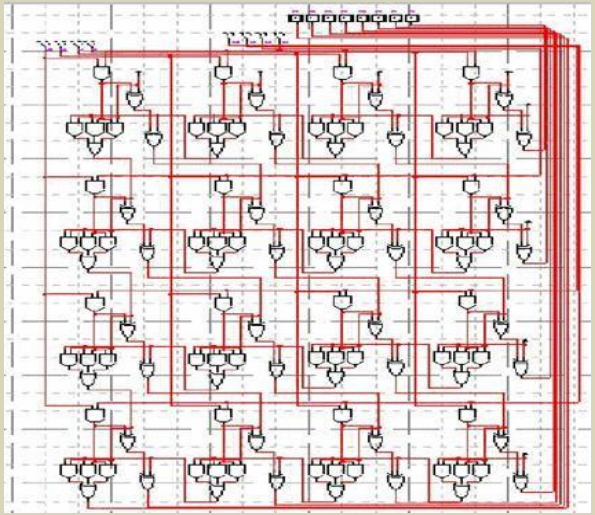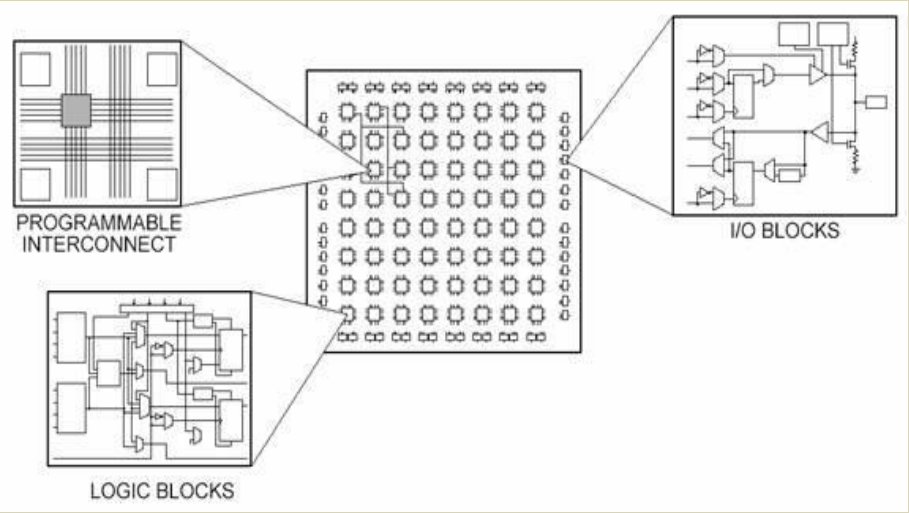
- FPGA(Field Programmable Gate Array)
  - Cell Based Design
  - Reusable Circuit