System-on-Chip(SoC) Design | 2026-1

Session1 : Brief Introduction to SoC

Embedded System and IoT

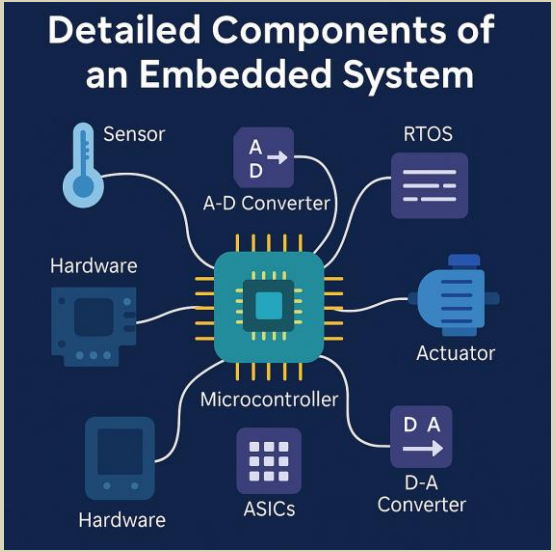

Legacy Embedded System

Internet

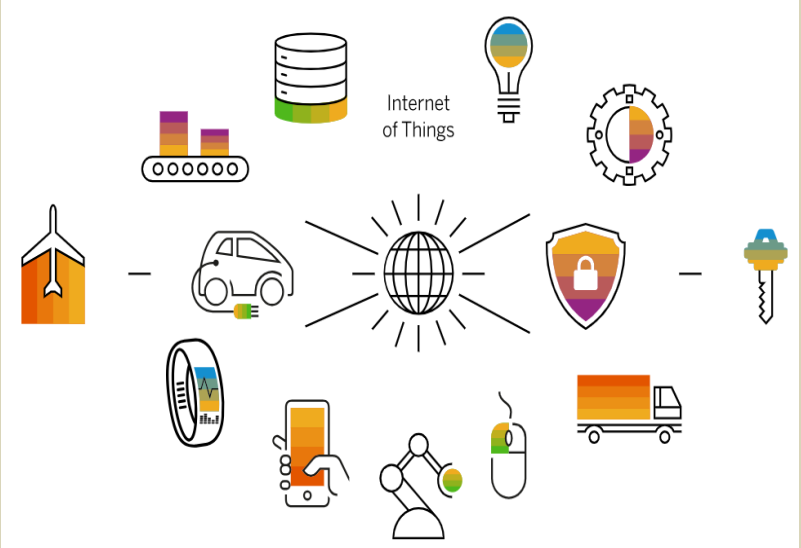

Embedded System Connected via Internet

System on Board(SoB)

Source: HP

System on Module(SoM)

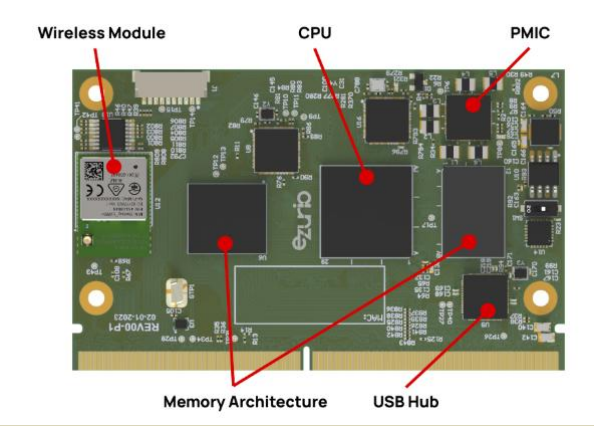

- Central Process Unit(CPU)
- On-Board Memory
- Wired/Wireless Interface
- I/O Interface
- Power Management IC(PMIC)
- Operating System
- Carrier Board Interface

System on Chip(SoC)

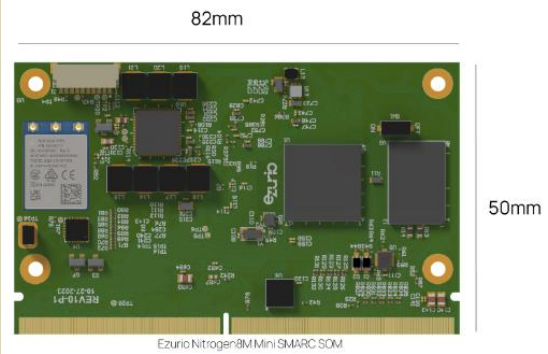

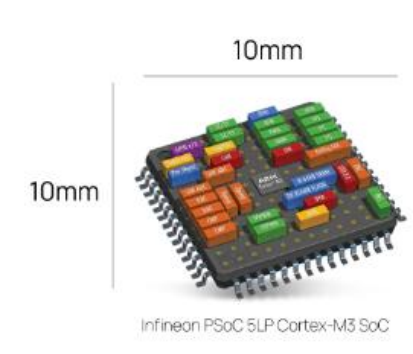

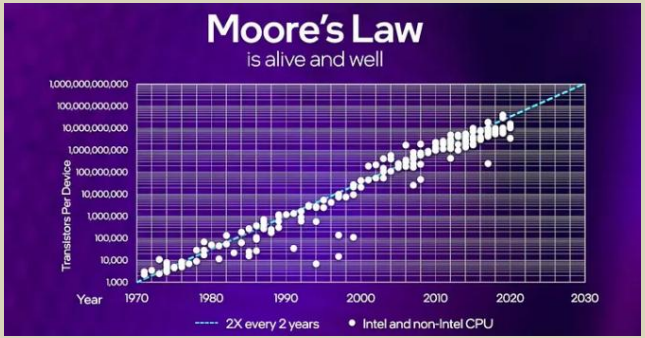

Code and Semiconductor

```
always @(posedge Clock) begin
    if (!Reset) begin
        state ≤ Idle;
        F ≤ 0;
        G ≤ 0;
    end
    else begin
        case (state)
            Idle: begin
                if (A) begin
                    state ≤ Start;
                    G ≤ 0;
                end
                else
```

Hardware Descriptive Language

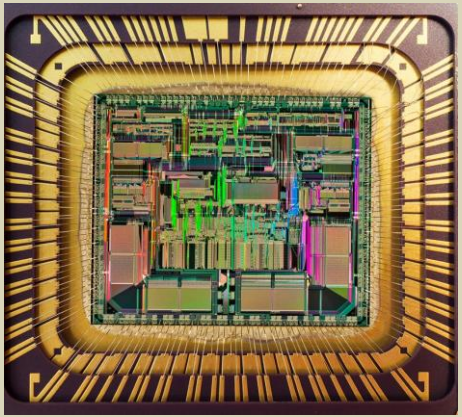

```
454
455     //Set starting screen address
456     lcd_set_window_address(x, y, x + 15, y + 20);
457
458     //Put LCD in data mode
459     gpio_set(LCD_RS); //LCD_RS=1;
460
461     //Loop through bitmap. NOTE: Font is two bits per pixel
462     for(uint8_t current_byte = 0; current_byte < ((16*20*2)/8)
463     {
464        for(uint8_t current_pixel = 0; current_pixel < 4; curre
465        {
466           pixel_value = color_table[color_table_map[((my_font[
467
468           //Send pixel to LCD
469           GPIOB->BSRR = 0xFFFF0000; //Clear data bus
470           GPIOB->BSRR = (uint8_t)(pixel_value >> 8);
471           GPIOA->BSRR = 0x00000100;//Set LCD_WR
472           GPIOA->BSRR = 0x01000000; //Clear LCD_WR
473           GPIOB->BSRR = 0xFFFF0000; //Clear data bus
```

Firmware(C Programming)

Fabrication

Control

Single Die SoC FPGA

PS/PL Configuration

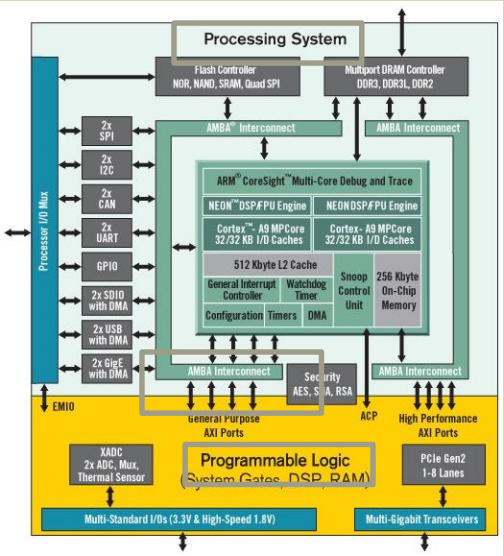


```
always @(posedge Clock) begin
    if (!Reset) begin
        state ≤ Idle;
        F ≤ 0;
        G ≤ 0;
    end
    else begin
        case (state)
            Idle: begin
                if (A) begin
                    state ≤ Start;
                    G ≤ 0;
                end
                else
```

PS Control

```
454
455     //Set starting screen address
456     lcd_set_window_address(x, y, x + 15, y + 20);
457
458     //Put LCD in data mode
459     gpio_set(LCD_RS); //LCD_RS=1;
460
461     //Loop through bitmap. NOTE: Font is two bits per pixel
462     for(uint8_t current_byte = 0; current_byte < ((16*20*2)/8)
463     {
464        for(uint8_t current_pixel = 0; current_pixel < 4; curre
465        {
466           pixel_value = color_table[color_table_map[((my_font[
467
468           //Send pixel to LCD
469           GPIOB->BSRR = 0xFFFF0000; //Clear data bus
470           GPIOB->BSRR = (uint8_t)(pixel_value >> 8);
471           GPIOA->BSRR = 0x00000100;//Set LCD_WR
472           GPIOA->BSRR = 0x01000000; //Clear LCD_WR
473           GPIOB->BSRR = 0xFFFF0000; //Clear data bus
```

SoC Board

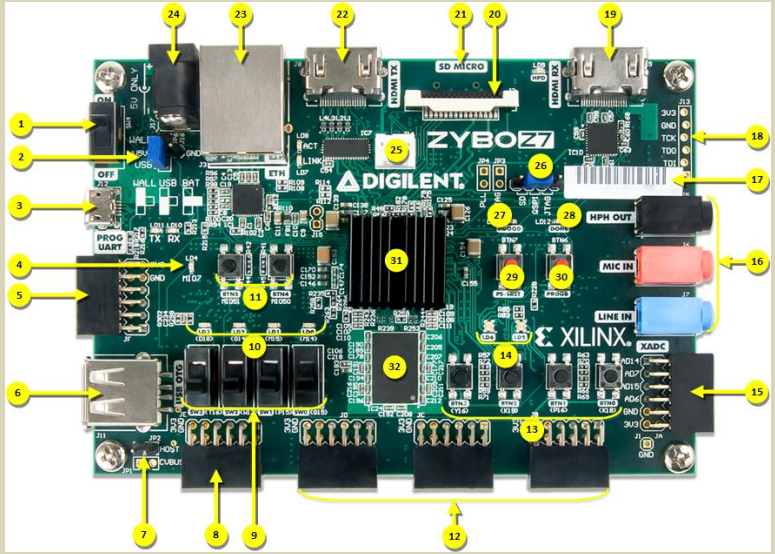

Callout	Description	Callout	Description	Callout	Description
1	Power Switch	12	High-speed Pmod ports*	23	Ethernet port
2	Power select jumper	13	User buttons	24	External power supply connector
3	USB JTAG/UART port	14	User RGB LEDs *	25	Fan connector (5V, three-wire) *
4	MIO User LED	15	XADC Pmod port	26	Programming mode select jumper
5	MIO Pmod port	16	Audio codec ports	27	Power supply good LED
6	USB 2.0 Host/OTG port	17	Unique MAC address label	28	FPGA programming done LED
7	USB Host power enable jumper	18	External JTAG port	29	Processor reset button
8	Standard Pmod port	19	HDMI input port	30	FPGA clear configuration button
9	User switches	20	Pcam MIPI CSI-2 port	31	Zynq-7000
10	User LEDs	21	microSD connector (other side)	32	DDR3L Memory
11	MIO User buttons	22	HDMI output port	* denotes difference between Z7-10 and Z7-20	