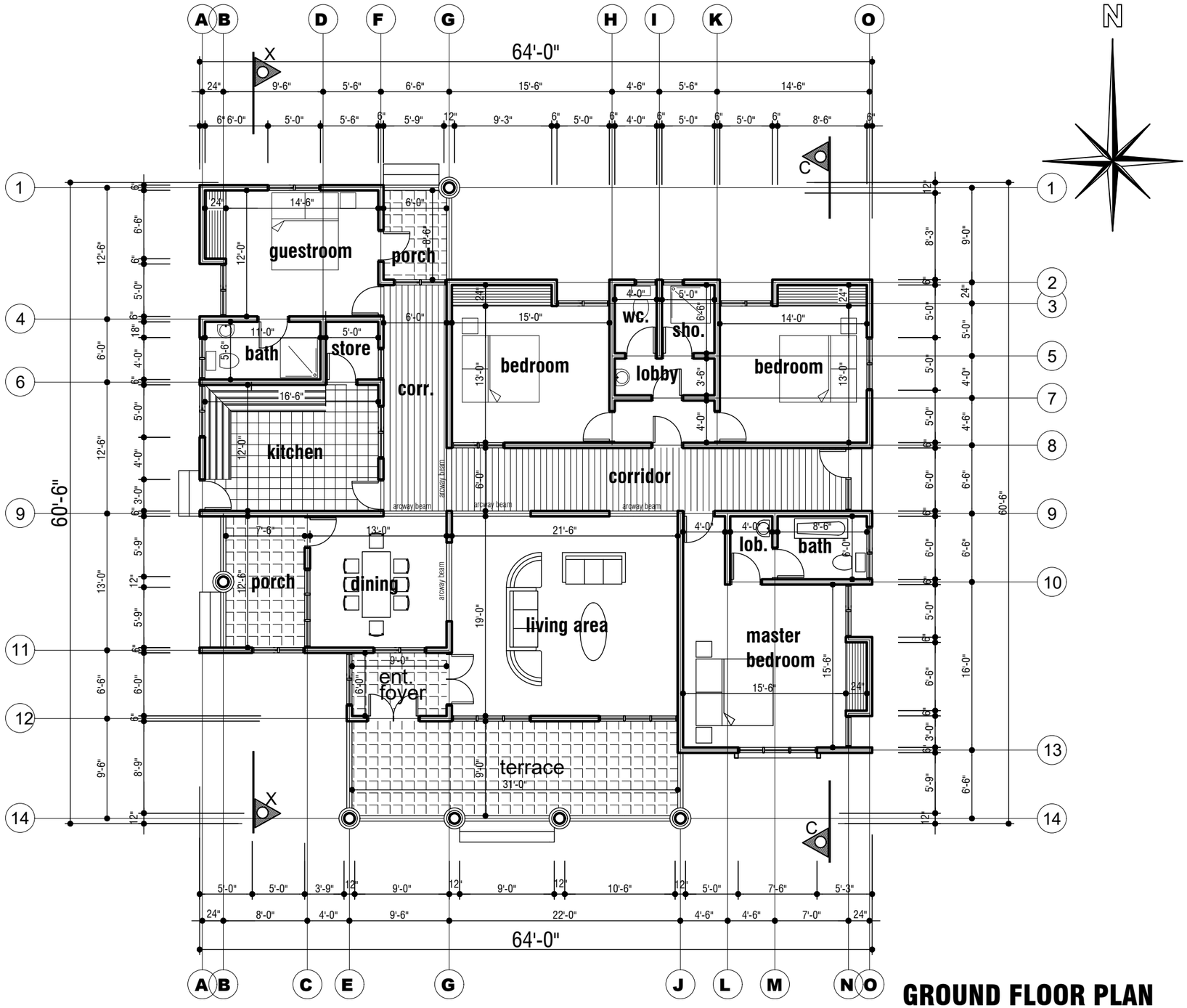

GROUND FLOOR PLAN

For more plans like these visit: freecadfloorplans.com

Project name: 64x60 house plan with 4 bedrooms

Drawing title: Architectural floor plans

CAD drawing: Elvis Alcequiez

Scale: Not to scale

Sheet number: 01

This plans are for educational or personal use only, it is illegal by copyright laws to redistribute, resell, or republish online.

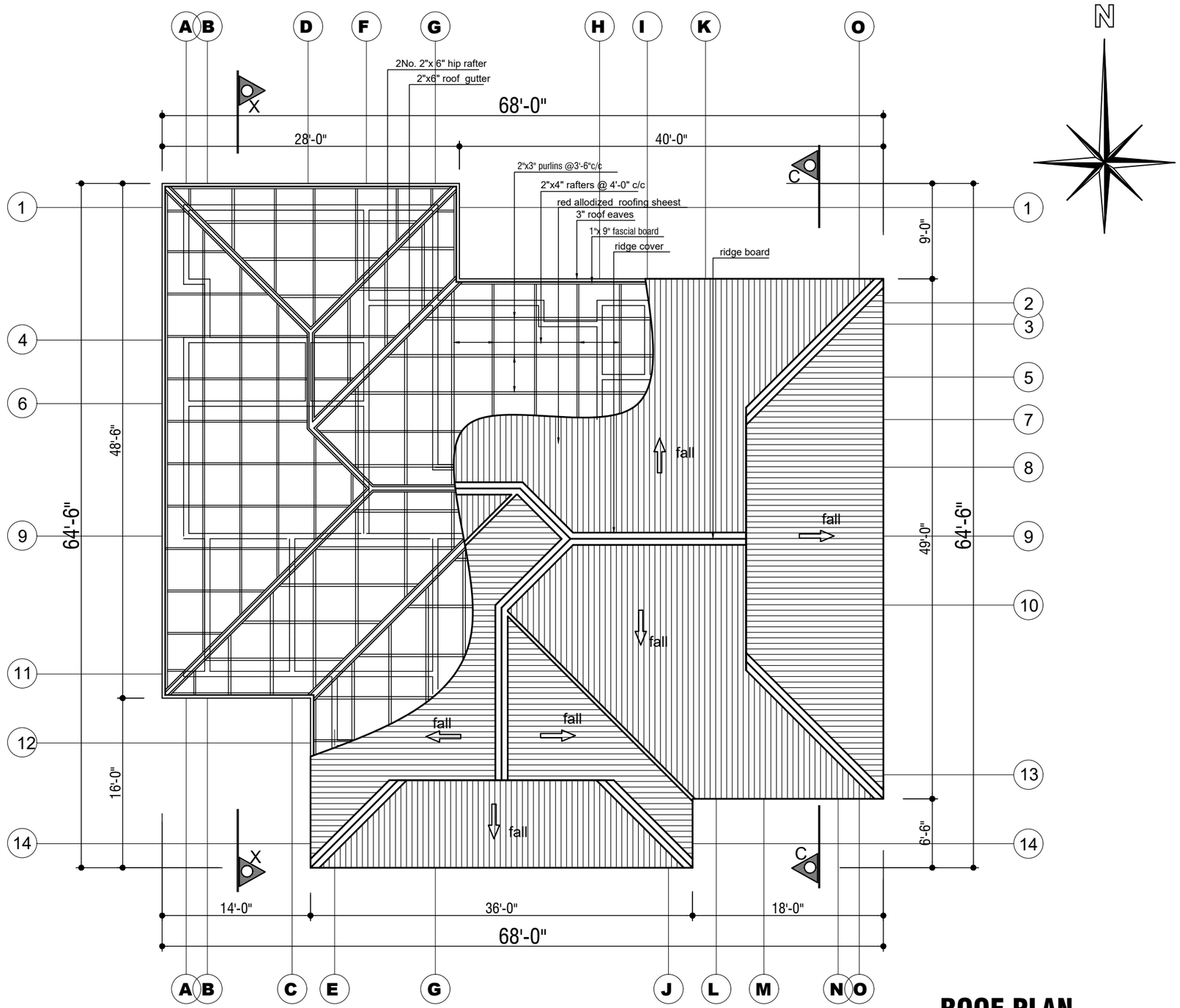

ROOF PLAN

For more plans like these visit:	freecadfloorplans.com
Project name:	64x60 house plan with 4 bedrooms
Drawing title:	Roof plan
CAD drawing:	Elvis Alcequiez
Scale	Not to scale
Sheet number	02

This plans are for educational or personal use only, it is illegal by copyright laws to redistribute, resell, or republish online.

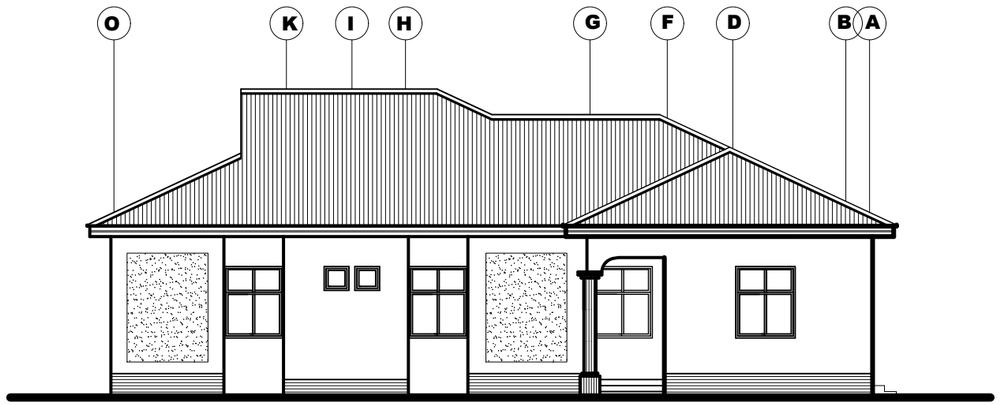

BACK ELEVATION

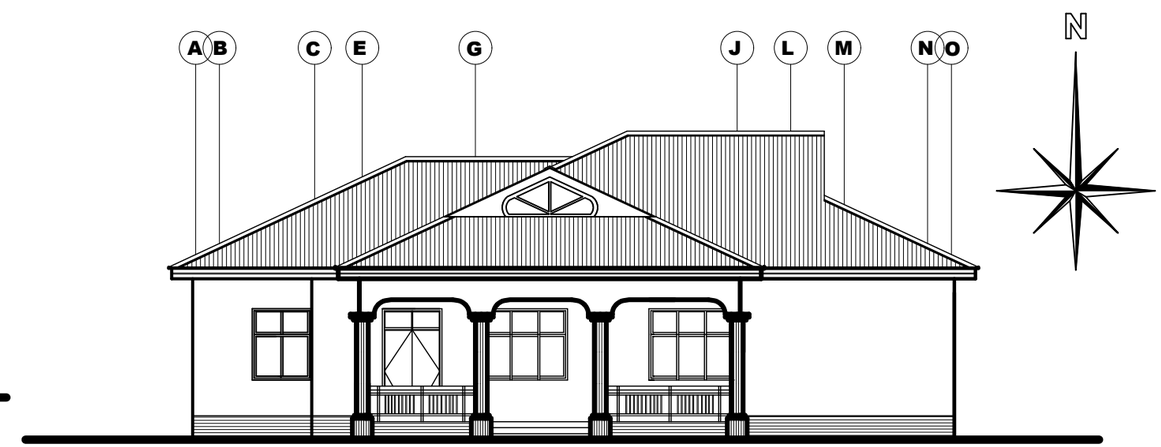

FRONT ELEVATION

LEFT SIDE ELEVATION

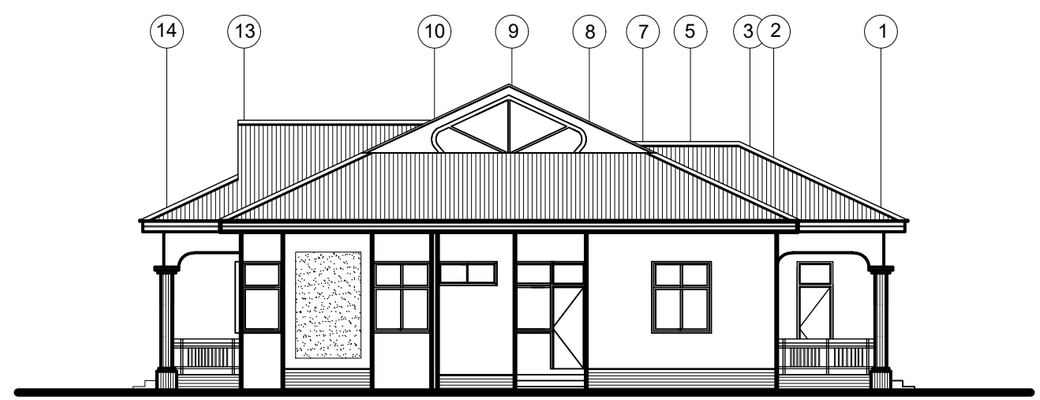

RIGHT SIDE ELEVATION

For more plans like these visit:

freecadfloorplans.com

Project name:

64x60 house plan with 4 bedrooms

Drawing title:

Elevations

CAD drawing:

Elvis Alcequiez

Scale

Not to scale

Sheet number

03

This plans are for educational or personal use only, it is illegal by copyright laws to redistribute, resell, or republish online.

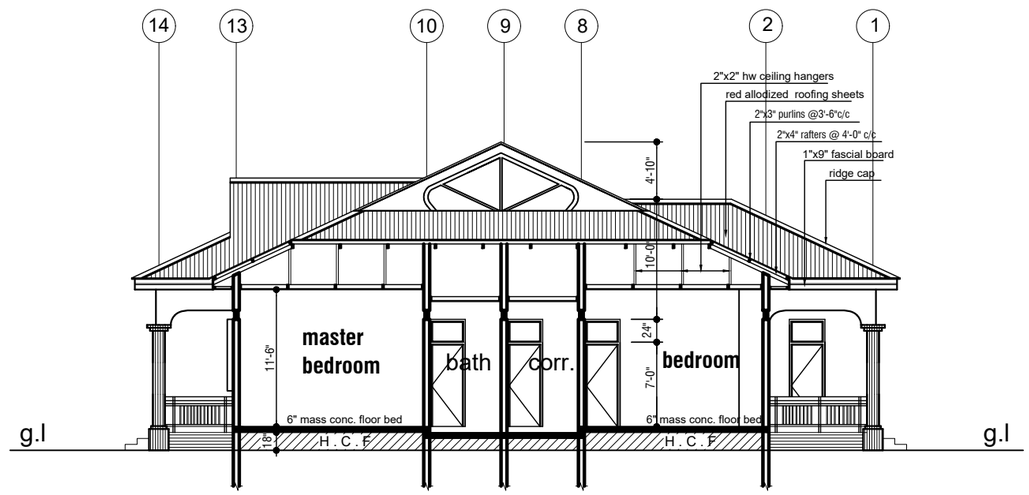

SECTION C-C

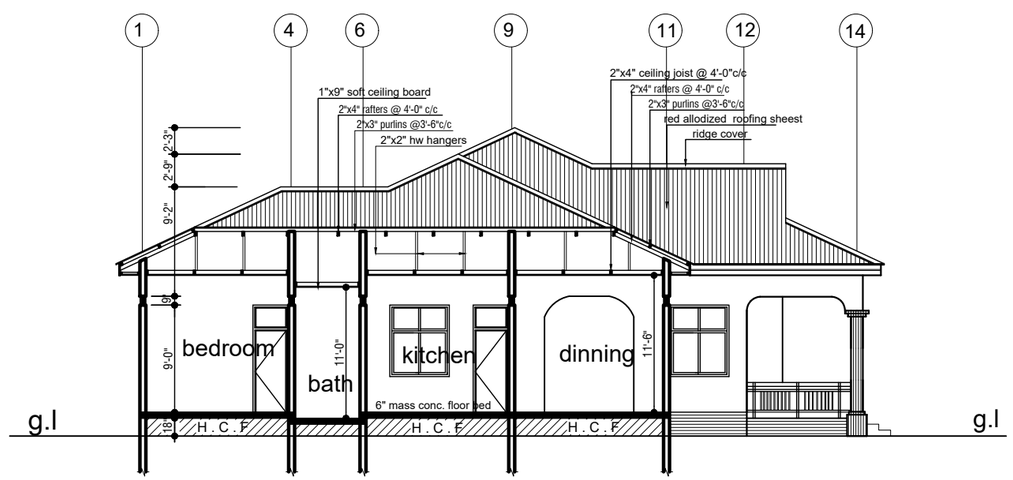

SECTION X-X

For more plans like these visit: freecadfloorplans.com

Project name: 64x60 house plan with 4 bedrooms

Drawing title: Sections

CAD drawing: Elvis Alcequiez

Scale: Not to scale

Sheet number: 04

This plans are for educational or personal use only, it is illegal by copyright laws to redistribute, resell, or republish online.

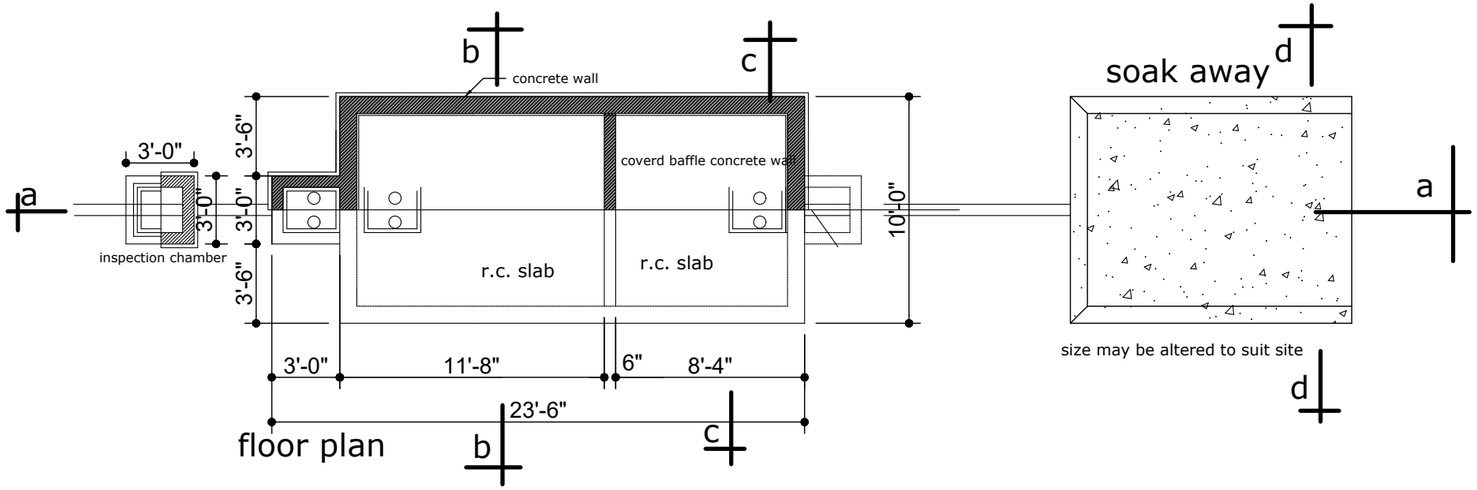

floor plan

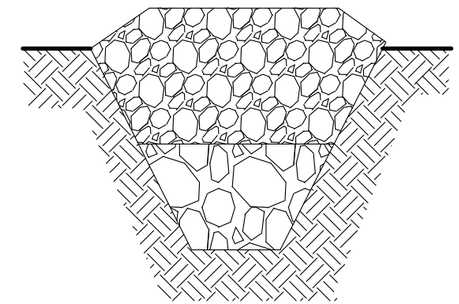

section d-d

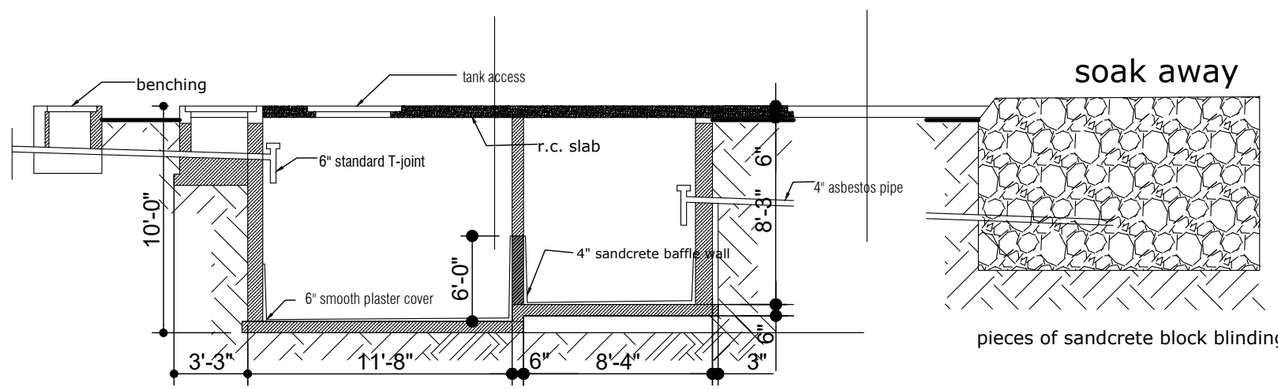

section a-a

pieces of sandcrete block blinding

typical manhole

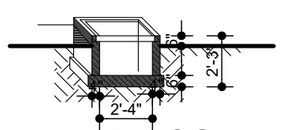

section f-f

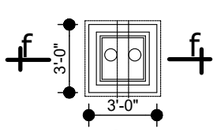

plan

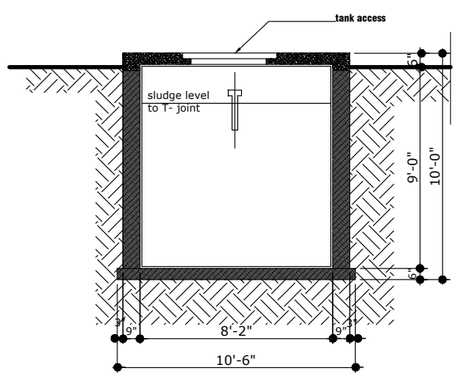

section b-b

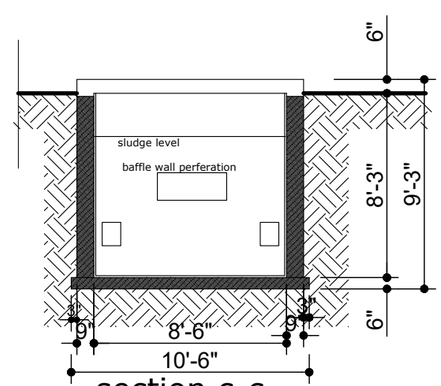

section c-c

For more plans like these visit: freecadfloorplans.com

Project name: 64x60 house plan with 4 bedrooms

Drawing title: Details of Sanitary Facilities

CAD drawing: Elvis Alcequiez

Scale: Not to scale

Sheet number: 05

This plans are for educational or personal use only, it is illegal by copyright laws to redistribute, resell, or republish online.