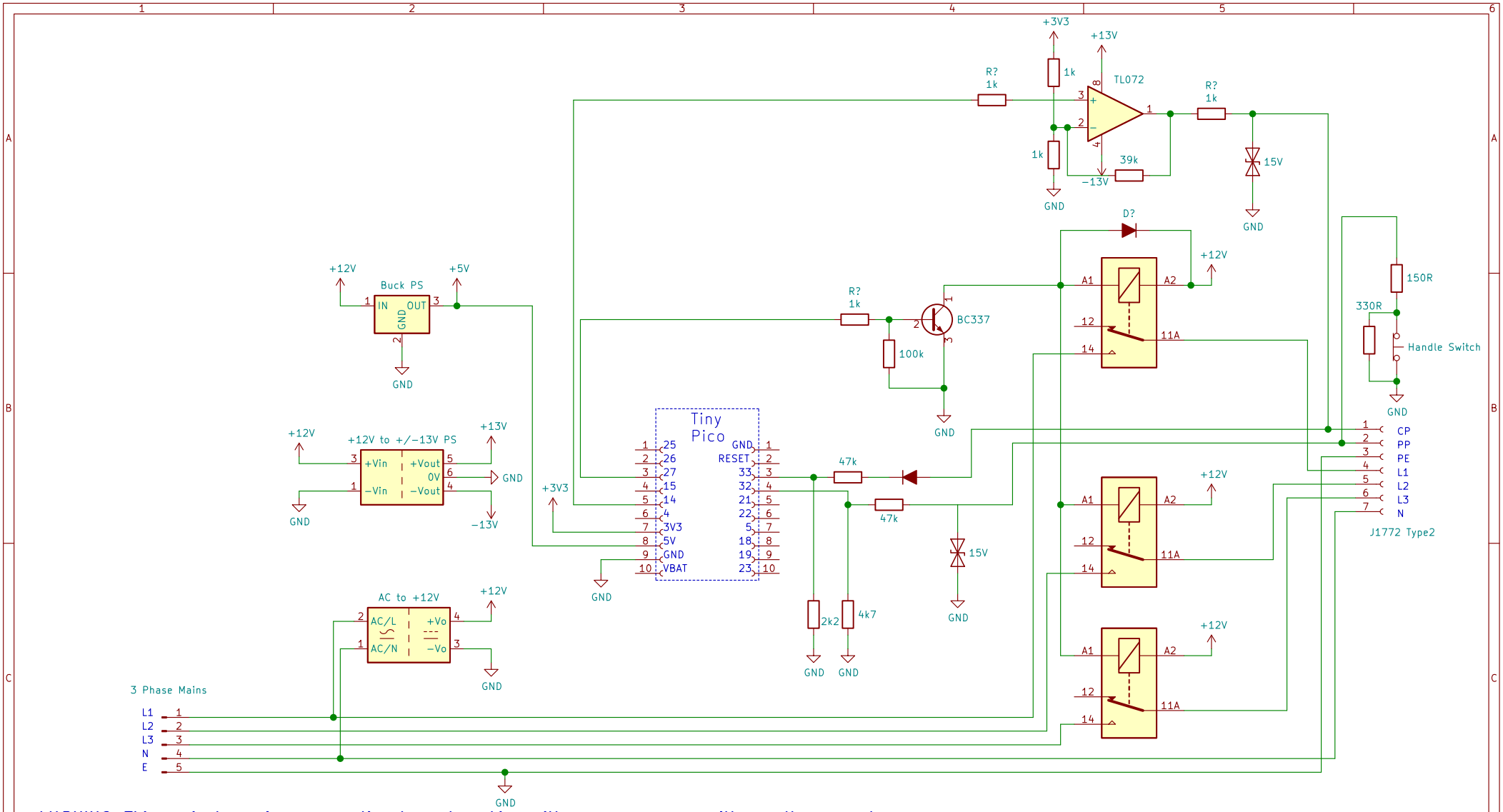

WARNING: This project requires connection to and working with a power source with a voltage greater than the ELV maximum of 50Vac.
Unauthorised work with voltages greater than the ELV maximum could cause death and maybe illegal in your country without suitable qualifications.

This circuit diagram is only a design guide and the author accepts no responsability for any injury or damage resulting from its use.

This work is licensed under the Creative Commons Attribution−ShareAlike 4.0 International License.
To view a copy of this license, visit http://creativecommons.org/licenses/by−sa/4.0/
or send a letter to Creative Commons, PO Box 1866, Mountain View, CA 94042, USA.

Sheet: /		
File: J1772.sch		
Title: J1772 Controller		
Size: A4	Date:23/03/2020	**Rev:** 0.9
KiCad E.D.A. eeschema 5.1.5+dfsg1−2		Id: 1/1