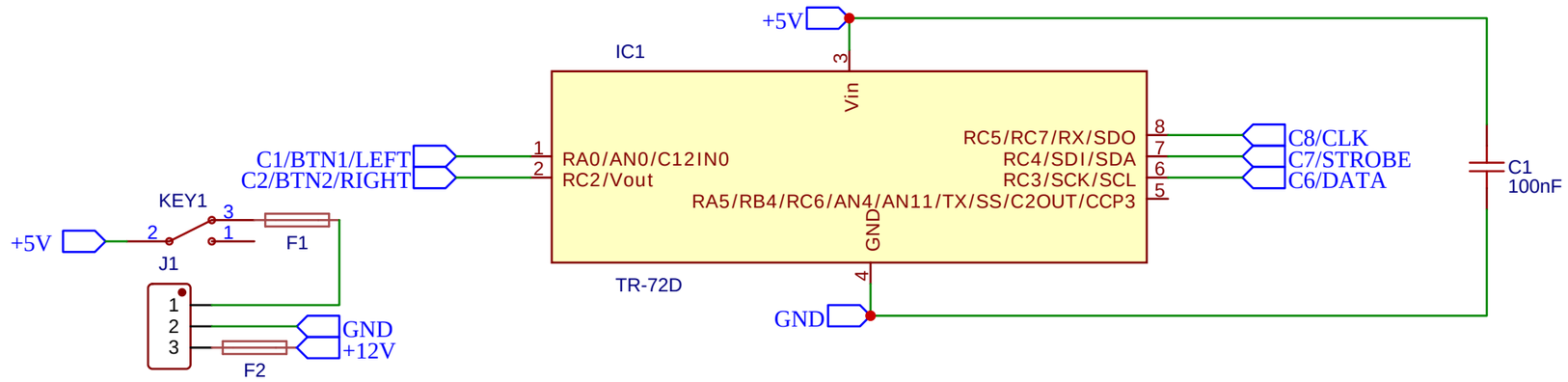

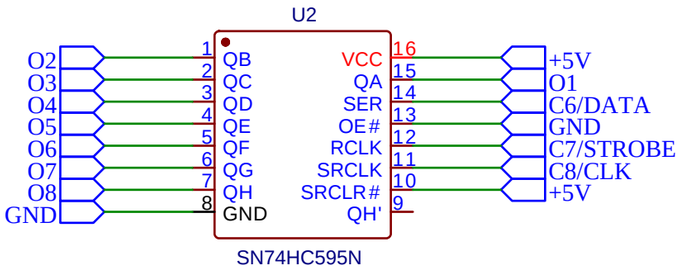

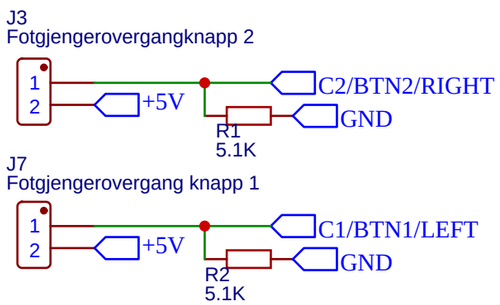

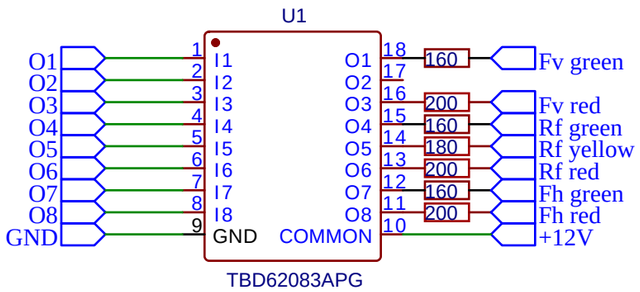

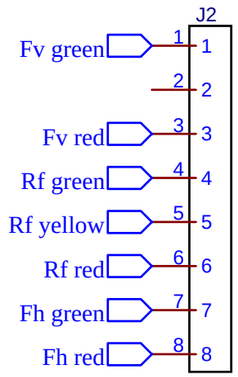

TITLE: Trafficlight 1 SHR		REV: 1.0
EasyEDA	Company: NTNU	Sheet: 1/1
	Date: 2019-09-30 Drawn By: Simen Stensås	