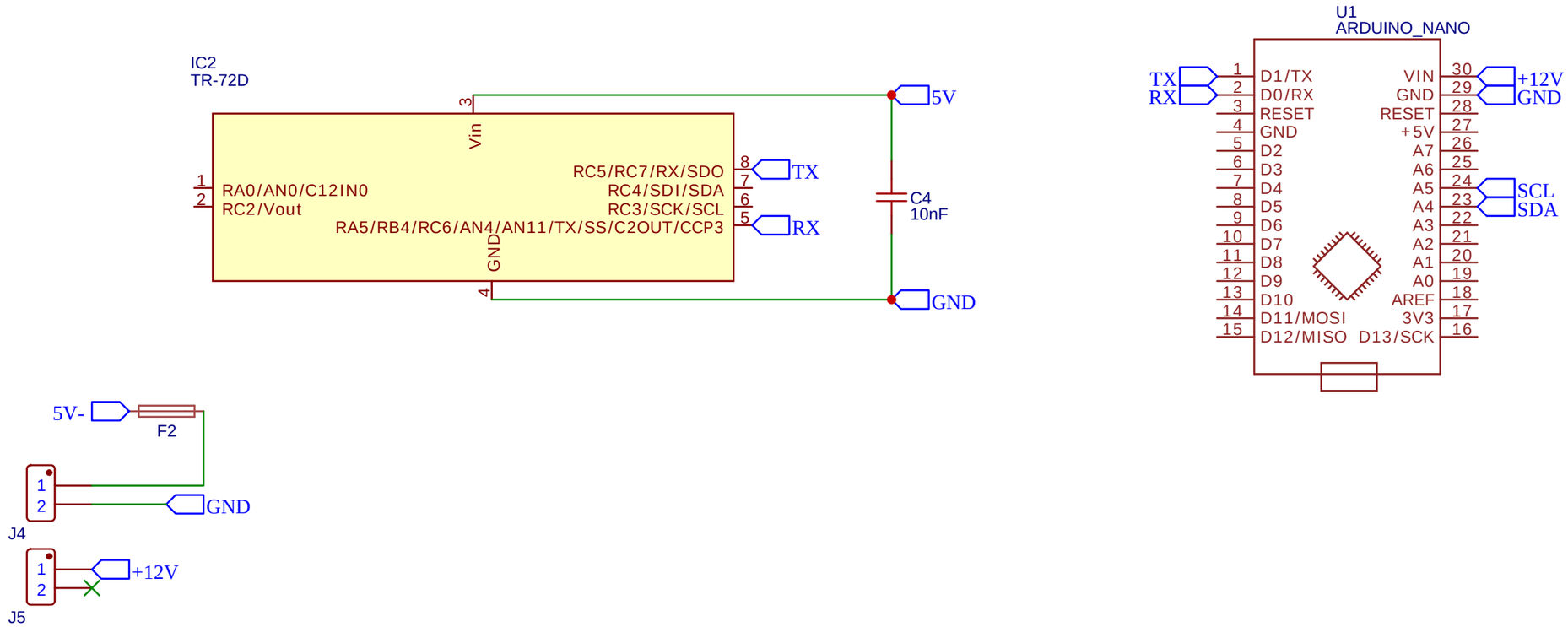

TITLE: Smart Parking Screen		REV: 1.0
EasyEDA	Company: NTNU	Sheet: 1/1
	Date: 2019-10-31 Drawn By: Simen Stensås	