50W Power Amplifier

Supply with Fuse and Ferrite Bead

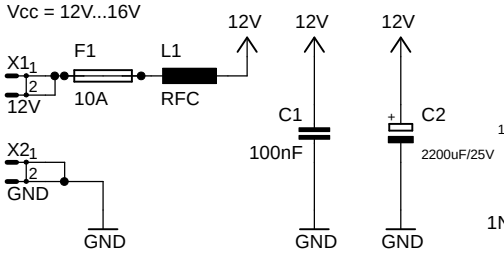

RF-Sensing (VOX) TX/RX Switch (PTT)

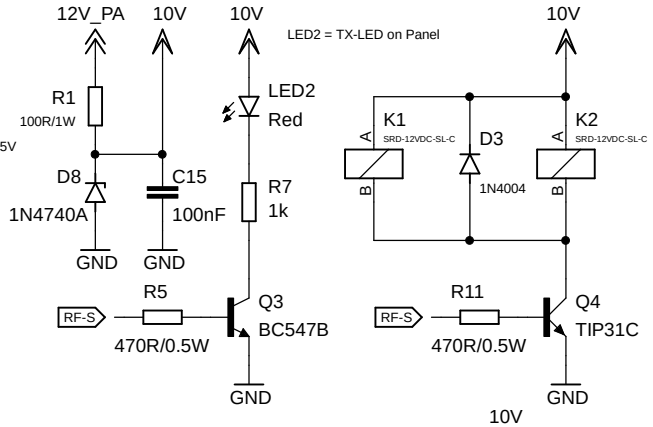

Bias Circuit

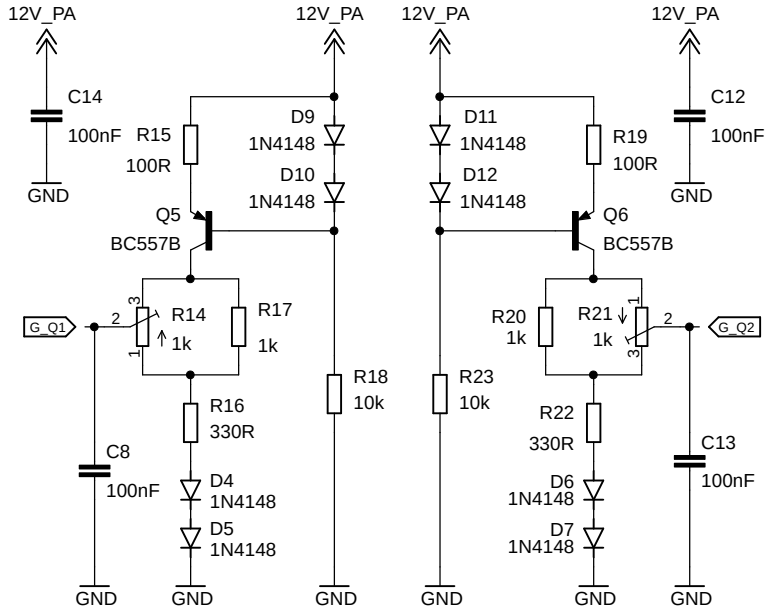

External Overcurrent Sense Circuit

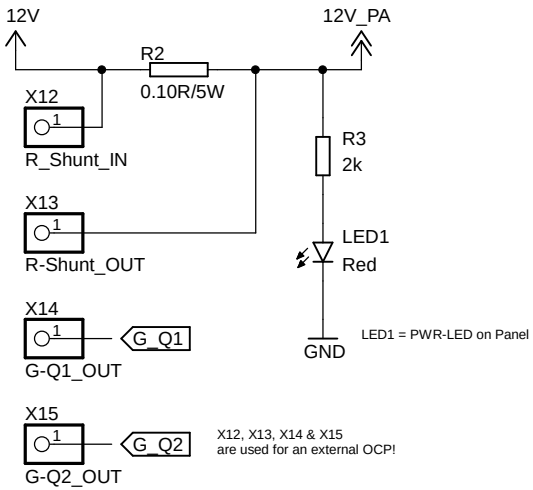

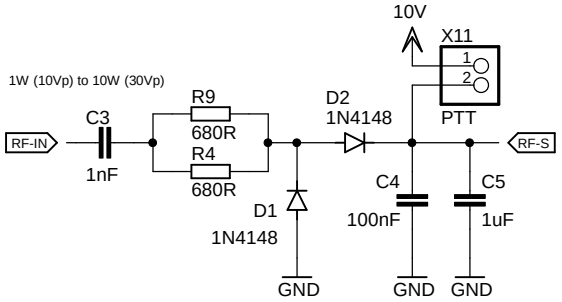

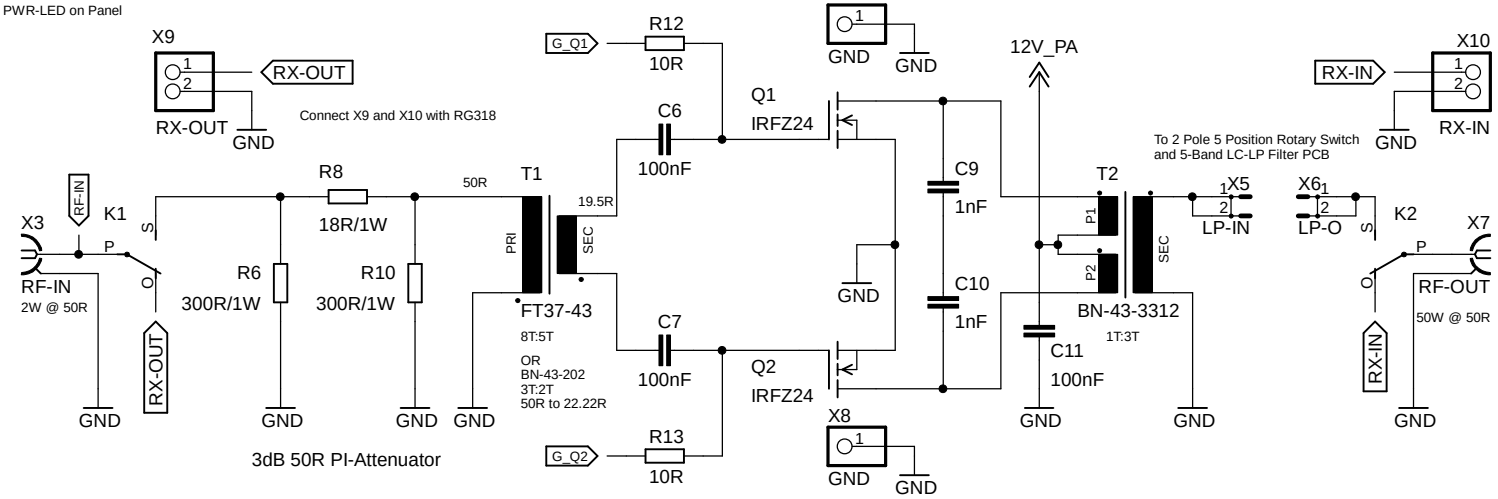
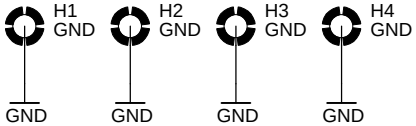
3mm GNDed Holes