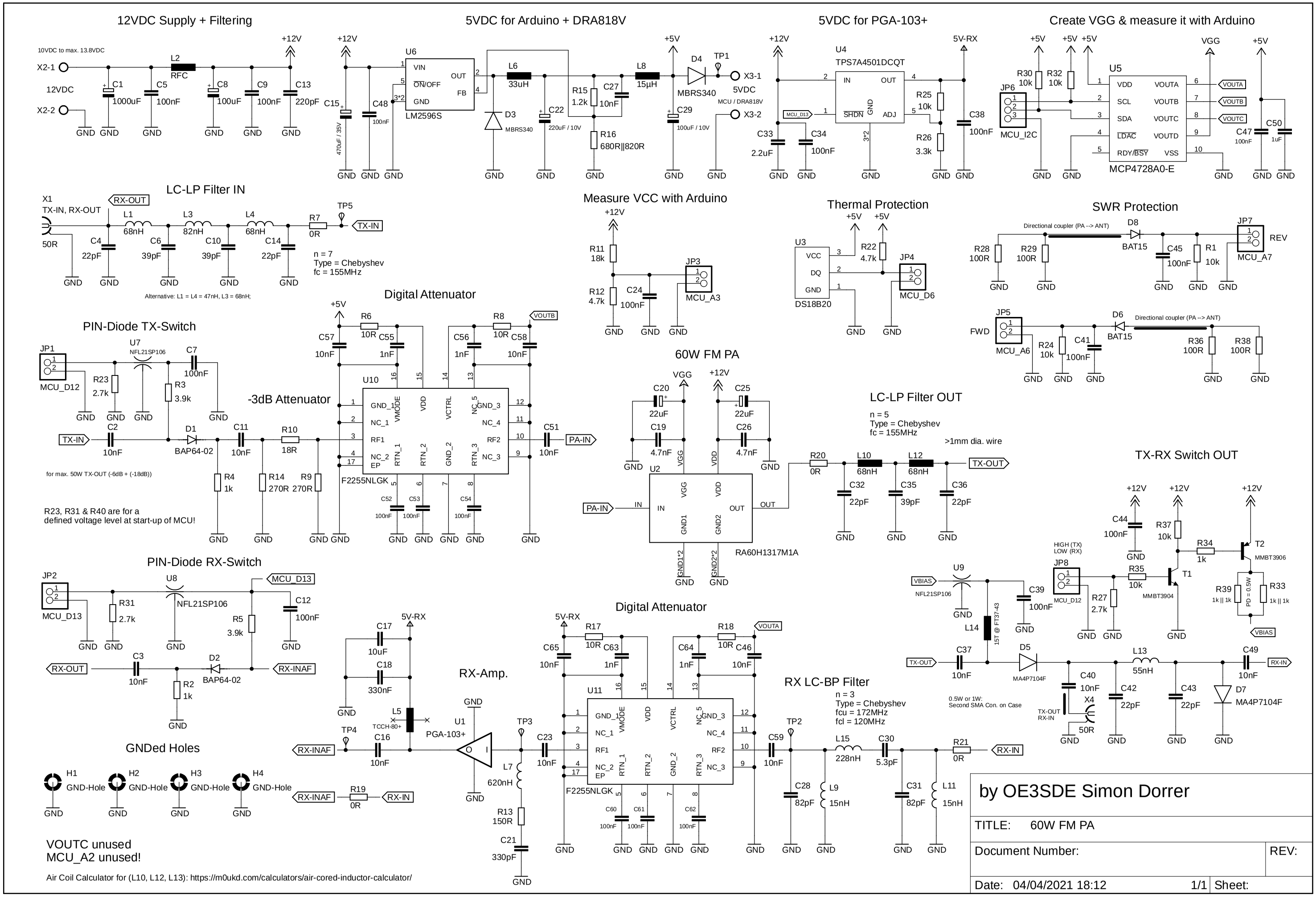
12VDC Supply + Filtering
10VDC to max. 13.8VDC
X2-1
12VDC
X2-2
L2
RFC
C1 1000uF
C5 100nF
C8 100uF
C9 100nF
C13 220pF
+12V
GND
5VDC for Arduino + DRA818V
U6
LM2596S
VIN
ON/OFF
GND
OUT
FB
C15 470uF / 35V
C48 100nF
L6 33uH
D3 MBRS340
C22 220uF / 10V
R15 1.2k
C27 10nF
R16 680R||820R
L8 15µH
D4 MBRS340
TP1
X3-1 5VDC
X3-2 MCU / DRA818V
C29 100uF / 10V
+5V
5VDC for PGA-103+
U4
TPS7A4501DCQT
IN
OUT
SHDN
GND
ADJ
MCU_D13
C33 2.2uF
C34 100nF
R25 10k
R26 3.3k
C38 100nF
5V-RX
Create VGG & measure it with Arduino
U5
MCP4728A0-E
VDD
SCL
SDA
LDAC
RDY/BSY
VOUTA
VOUTB
VOUTC
VOUTD
VSS
VGG
R30 10k
R32 10k
JP6
MCU_I2C
C47 100nF
C50 1uF
LC-LP Filter IN
X1
TX-IN, RX-OUT
50R
RX-OUT
L1 68nH
L3 82nH
L4 68nH
C4 22pF
C6 39pF
C10 39pF
C14 22pF
R7 0R
TP5
TX-IN
n = 7
Type = Chebyshev
fc = 155MHz
Alternative: L1 = L4 = 47nH, L3 = 68nH;
Measure VCC with Arduino
R11 18k
R12 4.7k
C24 100nF
JP3
MCU_A3
Thermal Protection
U3
DS18B20
VCC
DQ
GND
R22 4.7k
JP4
MCU_D6
SWR Protection
Directional coupler (PA --> ANT)
D8 BAT15
JP7
REV
MCU_A7
R28 100R
R29 100R
C45 100nF
R1 10k
JP5
FWD
MCU_A6
R24 10k
C41 100nF
D6 BAT15
R36 100R
R38 100R
PIN-Diode TX-Switch
JP1
MCU_D12
U7
NFL21SP106
R23 2.7k
R3 3.9k
C7 100nF
TX-IN
C2 10nF
D1 BAP64-02
C11 10nF
R10 18R
R4 1k
R14 270R
R9 270R
for max. 50W TX-OUT (-6dB + (-18dB))
R23, R31 & R40 are for a
defined voltage level at start-up of MCU!
Digital Attenuator
-3dB Attenuator
U10
F2255NLGK
VMODE
VDD
VCTRL
GND_1
NC_1
RF1
NC_2
EP
RTN_1
RTN_2
GND_2
RTN_3
NC_5
GND_3
NC_4
RF2
NC_3
R6 10R
R8 10R
VOUTB
C57 10nF
C55 1nF
C56 1nF
C58 10nF
C51 10nF
PA-IN
C52 100nF
C53 100nF
C54 100nF
60W FM PA
VGG
+12V
C20 22uF
C19 4.7nF
C25 22uF
C26 4.7nF
U2
RA60H1317M1A
IN
OUT
GND1
GND2
GND1*2
GND2*2
LC-LP Filter OUT
n = 5
Type = Chebyshev
fc = 155MHz
>1mm dia. wire
R20 0R
L10 68nH
L12 68nH
TX-OUT
C32 22pF
C35 39pF
C36 22pF
TX-RX Switch OUT
C44 100nF
R37 10k
R34 1k
T2 MMBT3906
HIGH (TX)
LOW (RX)
JP8
MCU_D12
R35 10k
T1 MMBT3904
R27 2.7k
R39 1k || 1k
R33 1k || 1k
PD = 0.5W
VBIAS
U9
NFL21SP106
C39 100nF
L14 15T @ FT37-43
D5 MA4P7104F
C37 10nF
C40 10nF
X4 50R
TX-OUT
RX-IN
0.5W or 1W:
Second SMA Con. on Case
L13 55nH
C42 22pF
C43 22pF
C49 10nF
D7 MA4P7104F
PIN-Diode RX-Switch
JP2
MCU_D13
U8
NFL21SP106
R31 2.7k
R5 3.9k
C12 100nF
RX-OUT
C3 10nF
D2 BAP64-02
RX-INAF
R2 1k
Digital Attenuator
U11
F2255NLGK
5V-RX
C17 10uF
C18 330nF
R17 10R
R18 10R
VOUTA
C65 10nF
C63 1nF
C64 1nF
C46 10nF
C60 100nF
C61 100nF
C62 100nF
RX-Amp.
U1
PGA-103+
L5 TCCH-80+
TP4
C16 10nF
TP3
C23 10nF
L7 620nH
R13 150R
C21 330pF
R19 0R
RX-IN
RX LC-BP Filter
n = 3
Type = Chebyshev
fcu = 172MHz
fcl = 120MHz
TP2
C59 10nF
L15 228nH
C30 5.3pF
R21 0R
C28 82pF
L9 15nH
C31 82pF
L11 15nH
GNDed Holes
H1 GND-Hole
H2 GND-Hole
H3 GND-Hole
H4 GND-Hole
VOUTC unused
MCU_A2 unused!
Air Coil Calculator for (L10, L12, L13): https://m0ukd.com/calculators/air-cored-inductor-calculator/
by OE3SDE Simon Dorrer
TITLE: 60W FM PA
Document Number:
REV:
Date: 04/04/2021 18:12
1/1
Sheet: