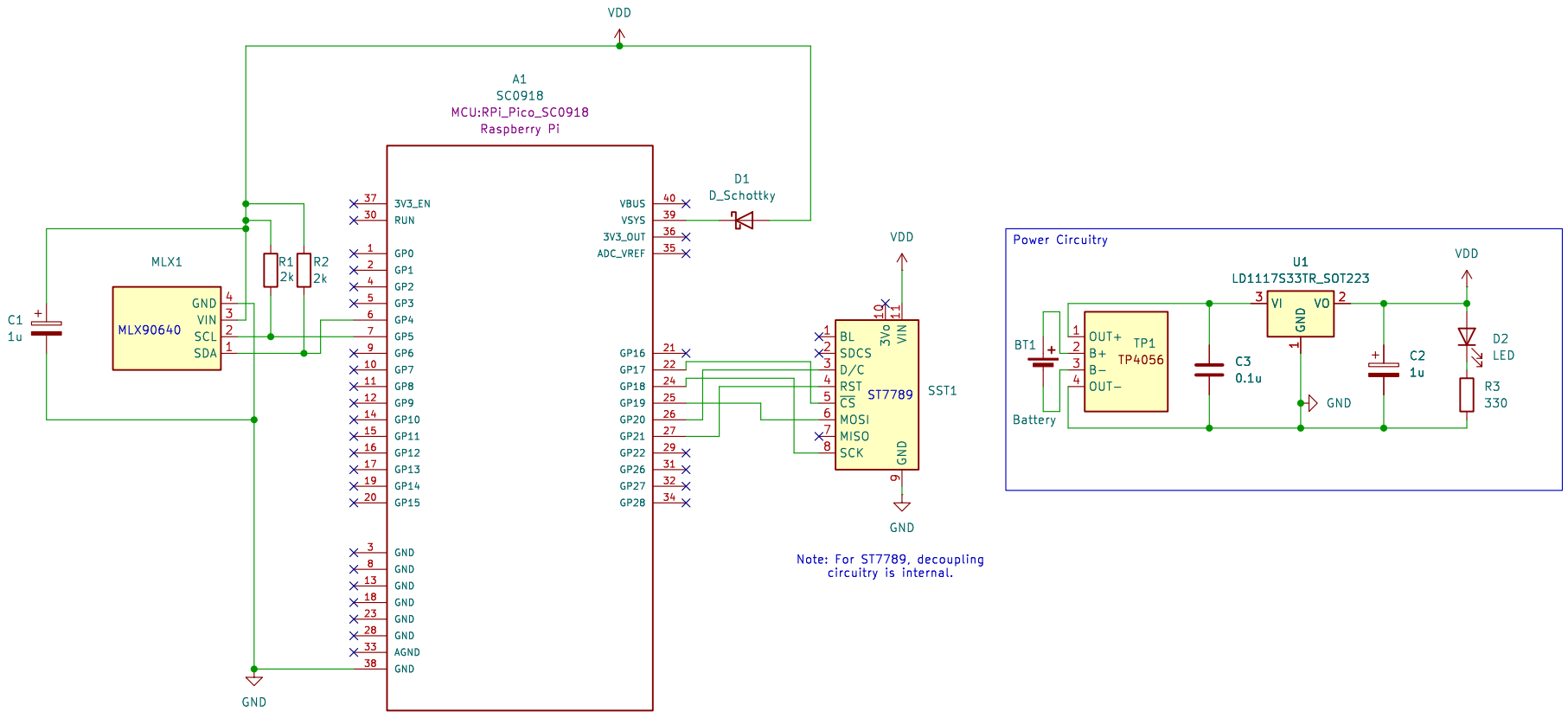

Author: Simon J. Jones
CU Boulder

Sheet: /
File: pcb.kicad_sch

Title: RP2040-Based Thermal Camera

Size: A4	Date: 2025-12-03	**Rev: 1.0.0**
KiCad E.D.A. 8.0.5		Id: 1/1