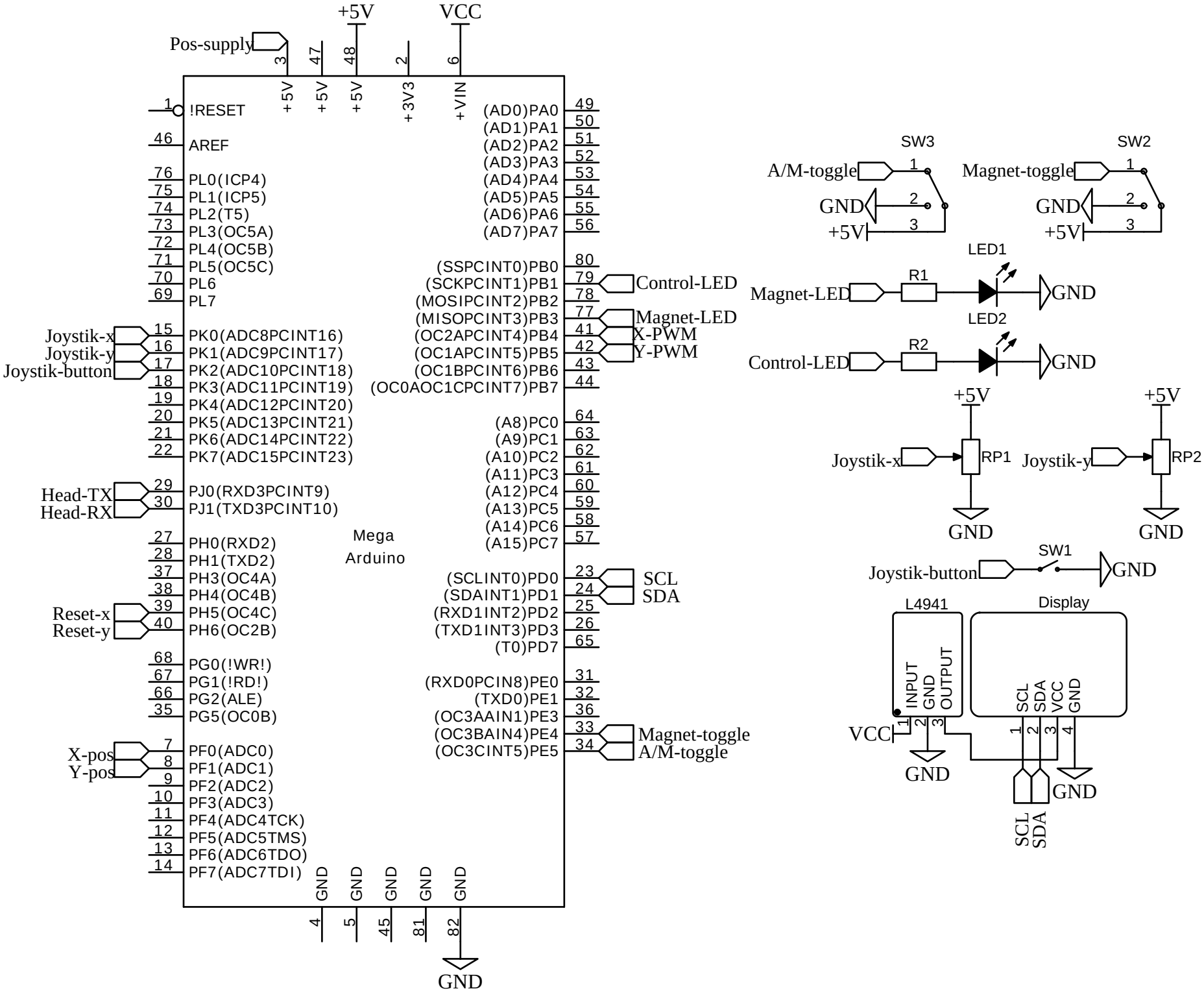
+5V
VCC
Pos-supply
3
47
48
2
6
+5V
+5V
+5V
+3V3
+VIN
1 !RESET
46 AREF
76 PL0(ICP4)
75 PL1(ICP5)
74 PL2(T5)
73 PL3(OC5A)
72 PL4(OC5B)
71 PL5(OC5C)
70 PL6
69 PL7
Joystik-x 15 PK0(ADC8PCINT16)
Joystik-y 16 PK1(ADC9PCINT17)
Joystik-button 17 PK2(ADC10PCINT18)
18 PK3(ADC11PCINT19)
19 PK4(ADC12PCINT20)
20 PK5(ADC13PCINT21)
21 PK6(ADC14PCINT22)
22 PK7(ADC15PCINT23)
Head-TX 29 PJ0(RXD3PCINT9)
Head-RX 30 PJ1(TXD3PCINT10)
27 PH0(RXD2)
28 PH1(TXD2)
37 PH3(OC4A)
38 PH4(OC4B)
Reset-x 39 PH5(OC4C)
Reset-y 40 PH6(OC2B)
68 PG0(!WR!)
67 PG1(!RD!)
66 PG2(ALE)
35 PG5(OC0B)
X-pos 7 PF0(ADC0)
Y-pos 8 PF1(ADC1)
9 PF2(ADC2)
10 PF3(ADC3)
11 PF4(ADC4TCK)
12 PF5(ADC5TMS)
13 PF6(ADC6TDO)
14 PF7(ADC7TDI)
Mega
Arduino
(AD0)PA0 49
(AD1)PA1 50
(AD2)PA2 51
(AD3)PA3 52
(AD4)PA4 53
(AD5)PA5 54
(AD6)PA6 55
(AD7)PA7 56
(SSPCINT0)PB0 80
(SCKPCINT1)PB1 79 Control-LED
(MOSIPCINT2)PB2 78
(MISOPCINT3)PB3 77 Magnet-LED
(OC2APCINT4)PB4 41 X-PWM
(OC1APCINT5)PB5 42 Y-PWM
(OC1BPCINT6)PB6 43
(OC0AOC1CPCINT7)PB7 44
(A8)PC0 64
(A9)PC1 63
(A10)PC2 62
(A11)PC3 61
(A12)PC4 60
(A13)PC5 59
(A14)PC6 58
(A15)PC7 57
(SCLINT0)PD0 23 SCL
(SDAINT1)PD1 24 SDA
(RXD1INT2)PD2 25
(TXD1INT3)PD3 26
(T0)PD7 65
(RXD0PCIN8)PE0 31
(TXD0)PE1 32
(OC3AAIN1)PE3 36
(OC3BAIN4)PE4 33 Magnet-toggle
(OC3CINT5)PE5 34 A/M-toggle
GND
4
5
45
81
82
GND
SW3
A/M-toggle
GND
+5V
1
2
3
SW2
Magnet-toggle
GND
+5V
1
2
3
LED1
Magnet-LED
R1
GND
LED2
Control-LED
R2
GND
+5V
Joystik-x
RP1
GND
+5V
Joystik-y
RP2
GND
SW1
Joystik-button
GND
L4941
INPUT
GND
OUTPUT
VCC
1
2
3
GND
Display
SCL
SDA
VCC
GND
1
2
3
4
GND
SCL
SDA