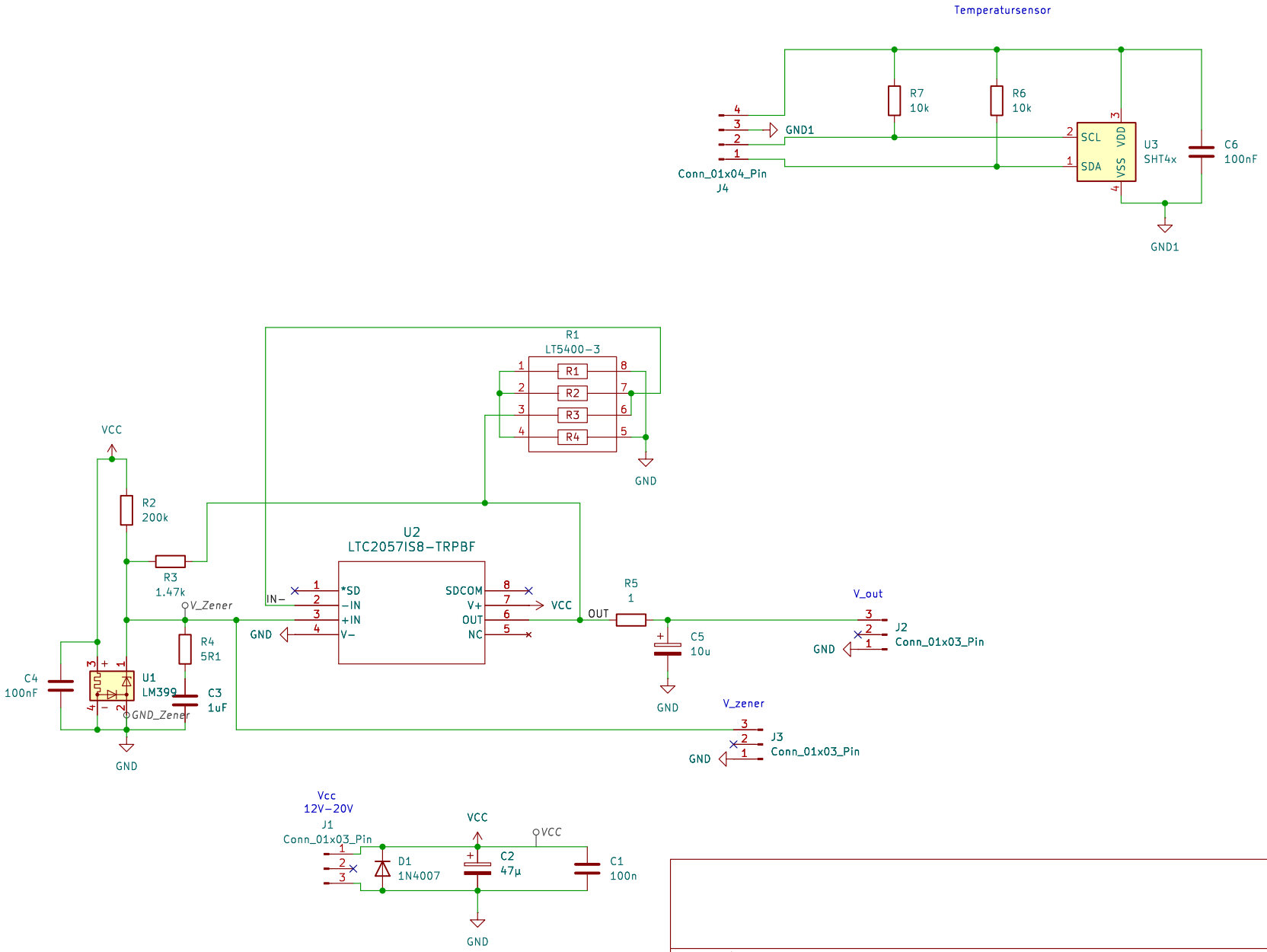

Sheet: /
File: ref_ver_1.kicad_sch

Title:

Size: A4	Date:	Rev:
KiCad E.D.A. 8.0.8		Id: 1/1