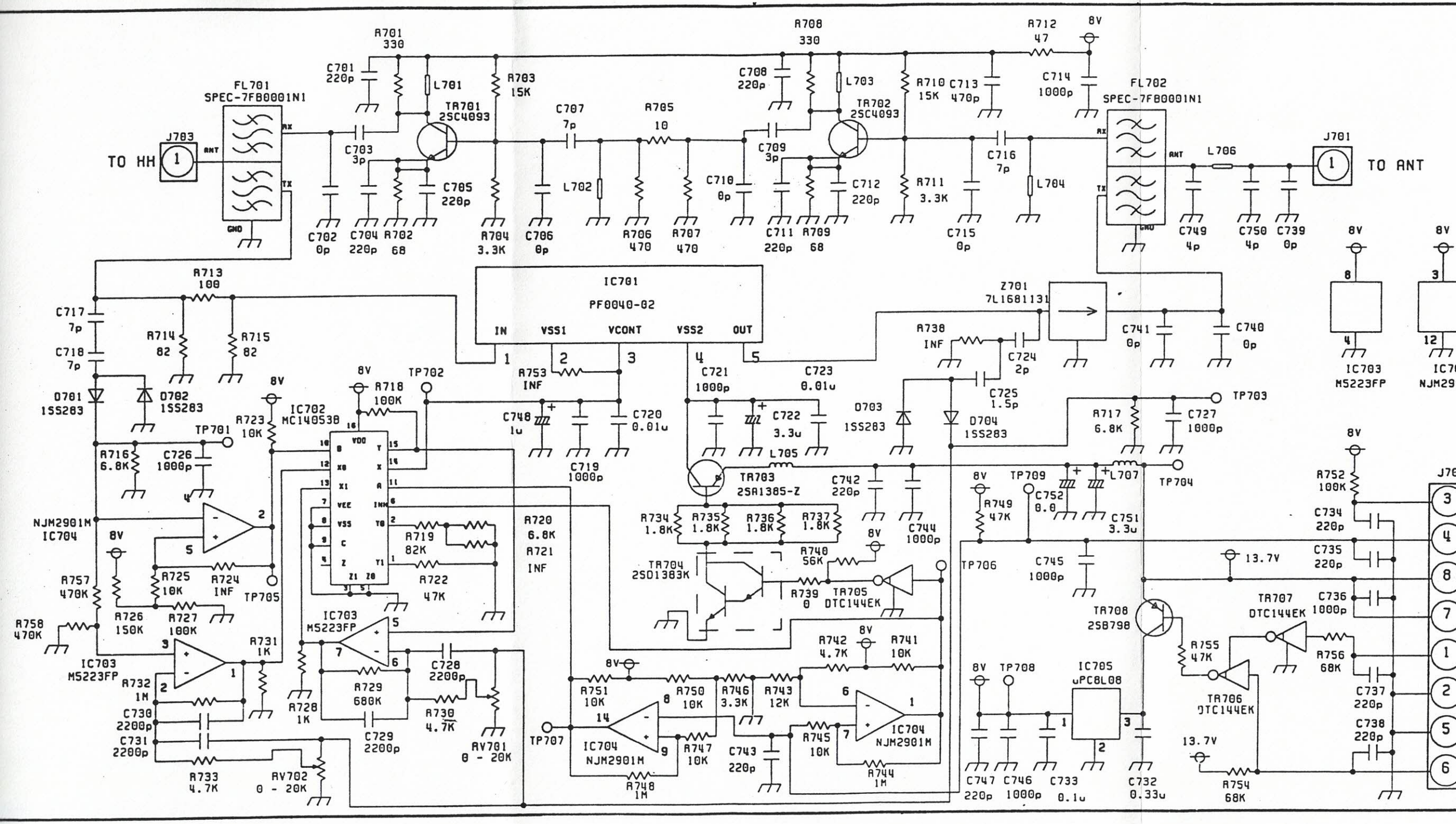
TO HH
J703
FL701
SPEC-7FB0001N1
ANT
RX
TX
GND
C702 0p
C701 220p
R701 330
C704 220p
C703 3p
R702 68
L701
TR701 2SC4093
C705 220p
R703 15K
R704 3.3K
C707 7p
C706 0p
L702
R705 10
R706 470
R707 470
C708 220p
R708 330
C710 0p
C709 3p
C711 220p
R709 68
L703
TR702 2SC4093
C712 220p
R710 15K
R711 3.3K
C713 470p
C715 0p
C716 7p
L704
R712 47
8V
C714 1000p
FL702
SPEC-7FB0001N1
L706
C749 4p
C750 4p
C739 0p
J701
TO ANT
R713 100
C717 7p
C718 7p
R714 82
R715 82
D701 1SS283
D702 1SS283
IC701
PF0040-02
IN
VSS1
VCONT
VSS2
OUT
R753 INF
C748 1u
C720 0.01u
C721 1000p
C722 3.3u
C723 0.01u
L705
TR703 2SA1385-Z
C742 220p
C744 1000p
R734 1.8K
R735 1.8K
R736 1.8K
R737 1.8K
TR704 2SD1383K
R740 56K
R739 0
TR705 DTC144EK
Z701 7L1681131
R738 INF
C724 2p
C725 1.5p
C741 0p
C740 0p
D703 1SS283
D704 1SS283
R717 6.8K
C727 1000p
TP703
TP704
L707
TP709
C752 0.0
C751 3.3u
R749 47K
TP706
C745 1000p
TR708 2SB798
R755 47K
TR707 DTC144EK
TR706 DTC144EK
R756 68K
13.7V
R754 68K
IC705 uPC8L08
TP708
C747 220p
C746 1000p
C733 0.1u
C732 0.33u
R742 4.7K
R741 10K
R743 12K
R746 3.3K
R745 10K
IC704 NJM2901M
R744 1M
R751 10K
R750 10K
R747 10K
R748 1M
C743 220p
TP707
IC704 NJM2901M
IC703 M5223FP
IC702 MC14053B
R718 100K
TP702
R723 10K
TP701
R716 6.8K
C726 1000p
NJM2901M IC704
R725 10K
R724 INF
TP705
R757 470K
R726 150K
R727 100K
R758 470K
IC703 M5223FP
R731 1K
R732 1M
C730 2200p
C731 2200p
R733 4.7K
RV702 0 - 20K
R719 82K
R722 47K
R720 6.8K
R721 INF
IC703 M5223FP
R728 1K
R729 680K
C729 2200p
C728 2200p
R730 4.7K
RV701 0 - 20K
R752 100K
C734 220p
C735 220p
C736 1000p
C737 220p
C738 220p
IC703 M5223FP
IC704 NJM29
J70

BK-22X SCH

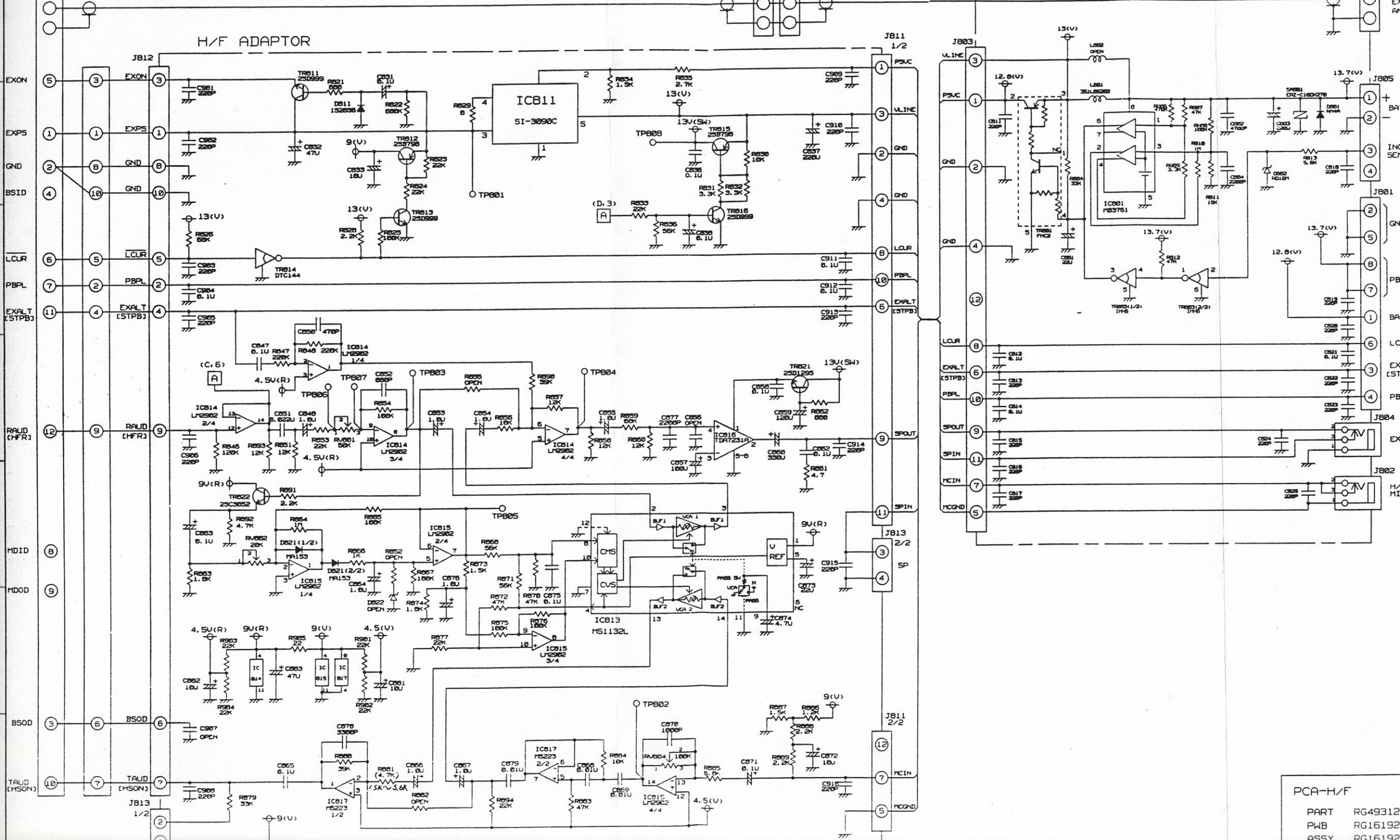
H/F ADAPTOR
IC811
SI-3090C
IC813
MS1132L
IC801
MB3761
PCA-H/F
PART RG49312
PWB RG16192
ASSY RG16192