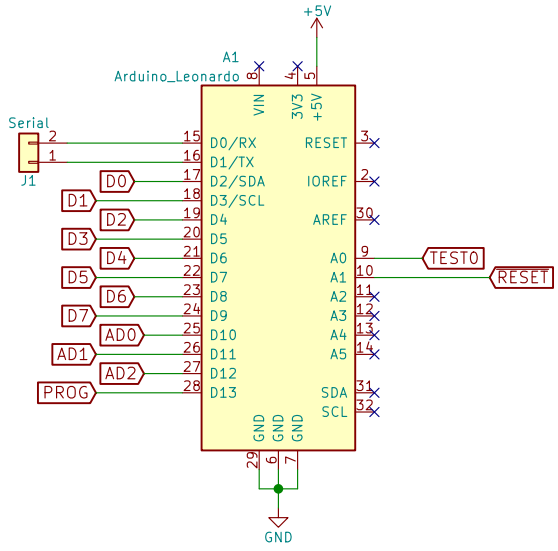

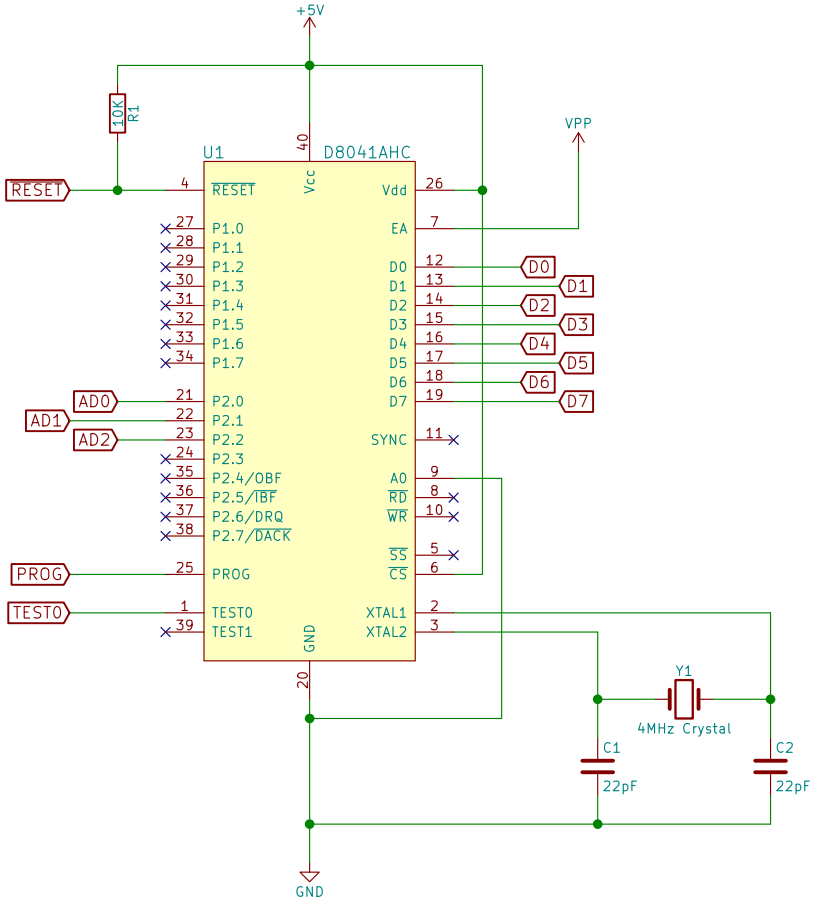

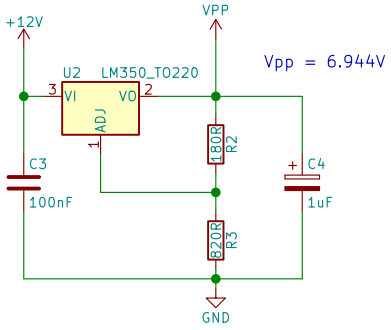

License: Attribution-ShareAlike 4.0 International (CC BY-SA 4.0)
(c)2018 Simon Inns
https://www.domesday86.com

Sheet: /
File: NEC8041AHC dumper.sch

Title: D8041AHC ROM Dumper

Size: A4	Date: 2018-04-14	**Rev: 1.0**
KiCad E.D.A. kicad 4.0.7		Id: 1/1