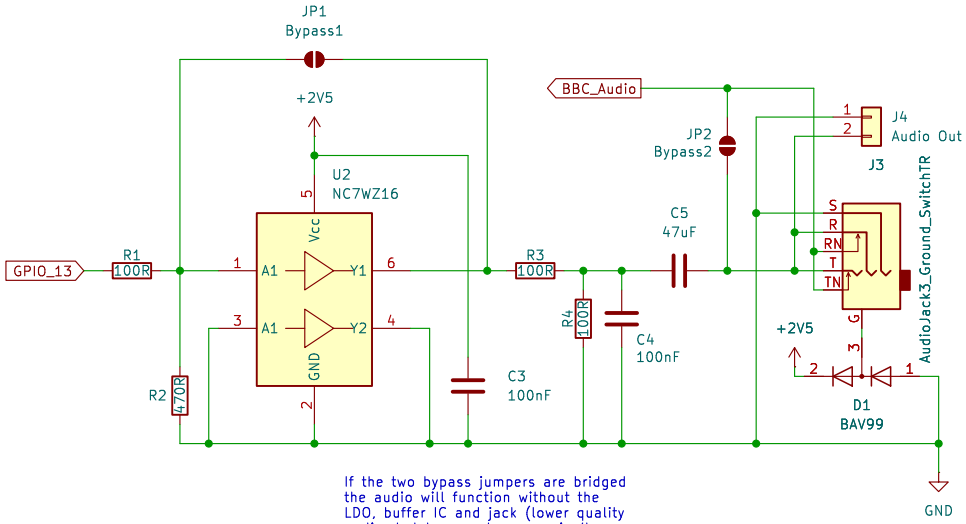

If the two bypass jumpers are bridged the audio will function without the LDO, buffer IC and jack (lower quality audio, but less cost or user isn't using a Pi Zero so has direct audio out.

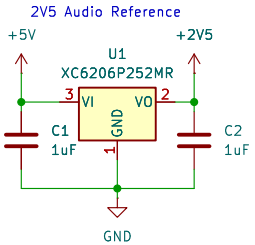

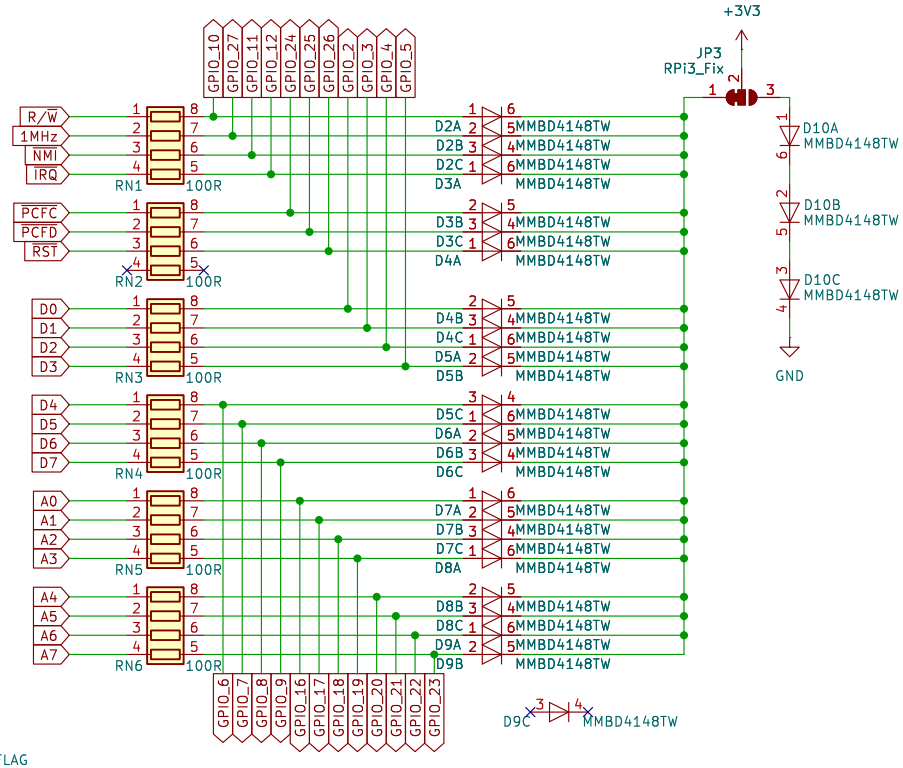

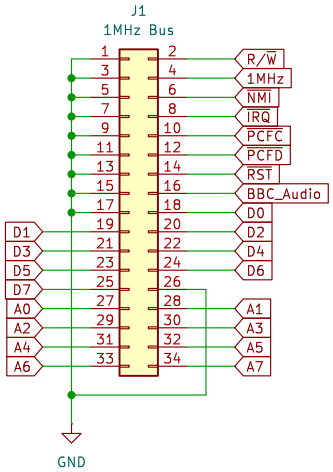

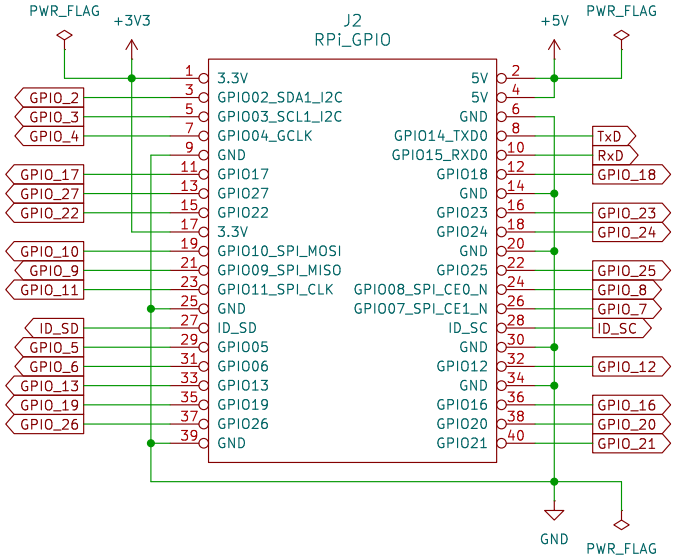

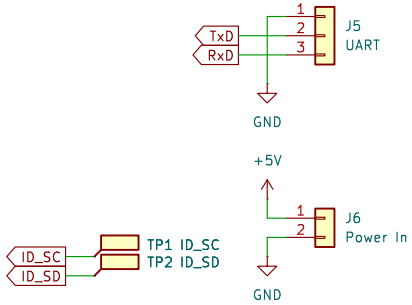

License: Attribution-ShareAlike 4.0 International (CC BY-SA 4.0)
(c)2025 Simon Inns & (c)2019-2025 Dominic Plunkett
https://www.domesday86.com

Sheet: /
File: Acorn_1Mhz_bus_PiZero_interface.kicad_sch

Title: Acorn BBC Micro/Master 1 MHz bus PiZero Interface

Size: A4	Date: 2025-02-10	**Rev: 1_0**
KiCad E.D.A. 8.0.8		Id: 1/1