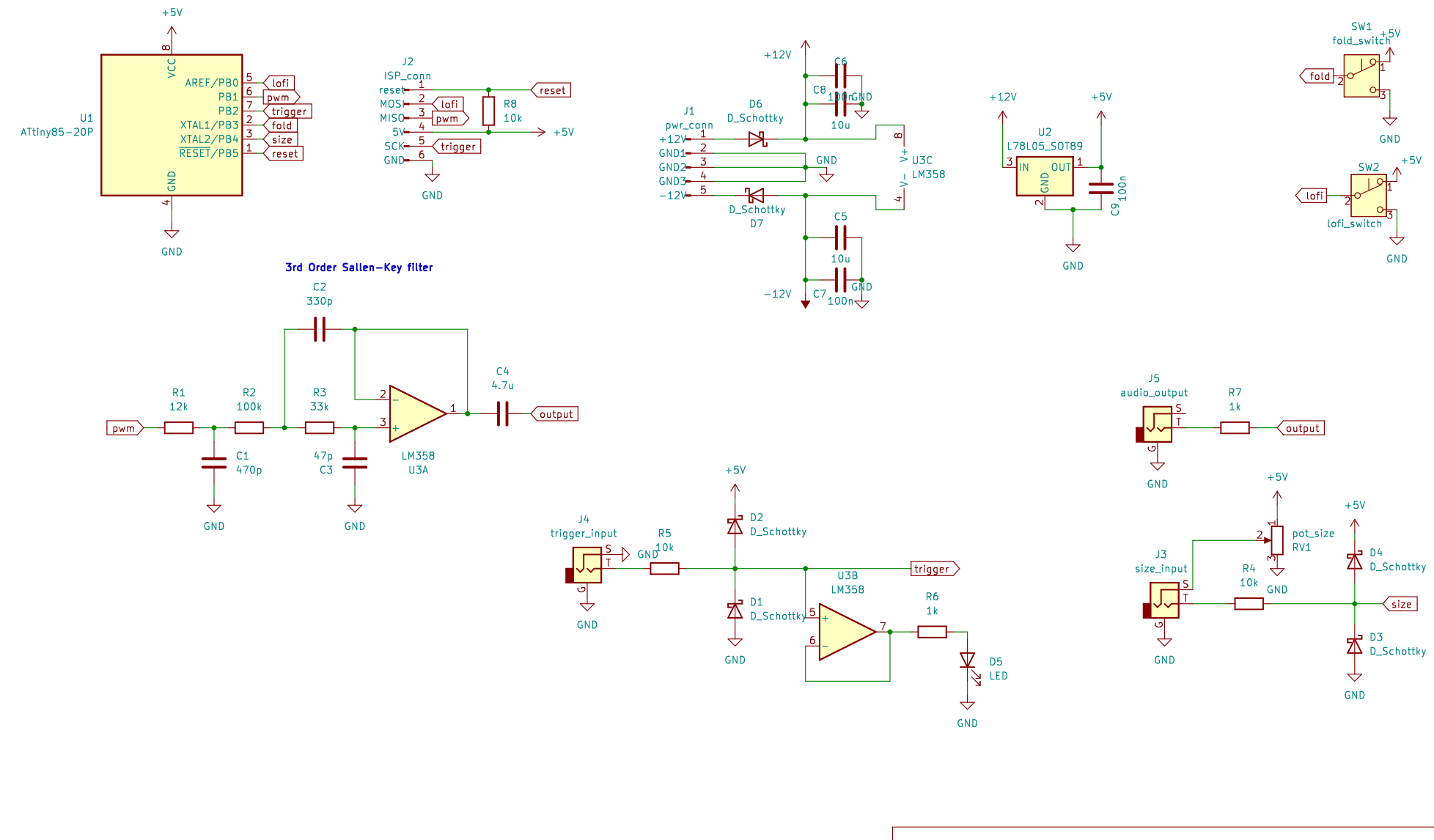

simonjuhl.net
Simon Juhl

Sheet: /
File: attiny_panel.kicad_sch

Title: Attiny85 panel

Size: A4	Date:	**Rev:**
KiCad E.D.A. kicad 7.0.10		Id: 1/1